A TRUE GLOBAL PRESENCE

Through a constant commitment to the Team DE-STA-CO philosophy, we draw from our worldwide pool of information and resources to offer the highest levels of service to each of our customers, regardless of geographic location. Our status as a truly global company empowers us to improve the global competitiveness of your operations. Whatever your automation or workholding need, Team DE-STA-CO has the best possible solution.

ABOUT DE-STA-CO

DE-STA-CO, a Dover Company, was founded in 1915. In 1936 the company designed and manufactured the first manual toggle clamp.

Innovations, quality and acquisitions have made DE-STA-CO the worldwide leader in the design, manufacture and support of clamping, gripping, transferring and robotic tooling solutions for workplace and flexible automation needs.

The family of brands has enabled DE-STA-CO to establish leading productivity improvement and cost-reduction manufacturing solutions for our customers using the breadth of products and value-added services we offer.

Our customer base covers a wide range of industries requiring a global customer service network offering consistent solutions and program support. With over 85 years of experience, DE-STA-CO brings a quality philosophy unsurpassed by its counterparts.

DE-STA-CO LEAN INITIATIVE

The DE-STA-CO family of companies is committed to being a lean resource for its customers, providing ways to eliminate waste in manufacturing processes through the use of optimal clamping and automation solutions that eliminate bottlenecks.

DE-STA-CO's wide range of products allows the company to offer its customers an Automation Continuum™ providing solutions that increase profitability and efficiency, while reducing waste.

PRODUCT WARRANTY

All DE-STA-CO Industrial Products are thoroughly inspected and tested. We fully guarantee all materials and workmanship to be free of defects. Any product that is found to be defective in design, material or workmanship in the course of its normal use will be promptly replaced.

This Warranty does not apply to any product where the failure is a result of misapplication or abuse, nor is there any Warranty expressed or implied as to the merchantability or fitness for a particular purpose of the product and any warranty is limited to the above express warranty.

This Warranty is null and void if the product is repaired, modified or altered in any way.

DE-STA-CO is not liable for labor, special, direct, incidental, or consequential damages and under no circumstances any charges in excess of the invoice amount of the product proven to be defective.

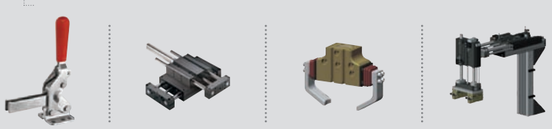

Positioning our customers for productivity.

A DOVER COMPANY

1025 Doris Road
Auburn Hills, MI 48326

Phone: 1.248.836.6750
1.888.DESTACO

Fax: 1.248.836.6743
1.800.682.9686

Email: cs-workholding@destaco.com
Web: www.destaco.com

DGS11/07:WS_07:Rev07/10 15K

WORKHOLDING SOLUTIONS

Fall 2008

MANUAL CLAMPING
TECHNOLOGY

PNEUMATIC CLAMPING
TECHNOLOGY

HYDRAULIC CLAMPING
TECHNOLOGY

www.destaco.com

Positioning our customers for productivity.

WORKHOLDING SOLUTIONS Fall 2008

Manual Clamping Technology

NEW

Series 2002, 2007, 2010:
Next generation vertical toggle clamp
Page 2.7

Series 2013, 2017, 2027, 2037:
Next generation horizontal toggle clamp
Page 3.5

Models 305-UR, 307-UR, 309-UR:
With additional safety lock
Page 3.17

Models 6001-M, 6001-MSS:
50% higher holding capacity
Page 4.4, 8.12

Models 6015-M, 6015-MR:
Compact and robust
Page 4.9, 4.10

Model 603-R:
With additional safety lock
Page 4.12

Models 95030, 95040, 95050, 95060:
Low-profile straight-line action clamps
Page 4.21

Our new 2000 Series Horizontal Hold-Down Action Clamps provide unmatched performance and ergonomics.

So many reasons to choose DE-STA-CO.

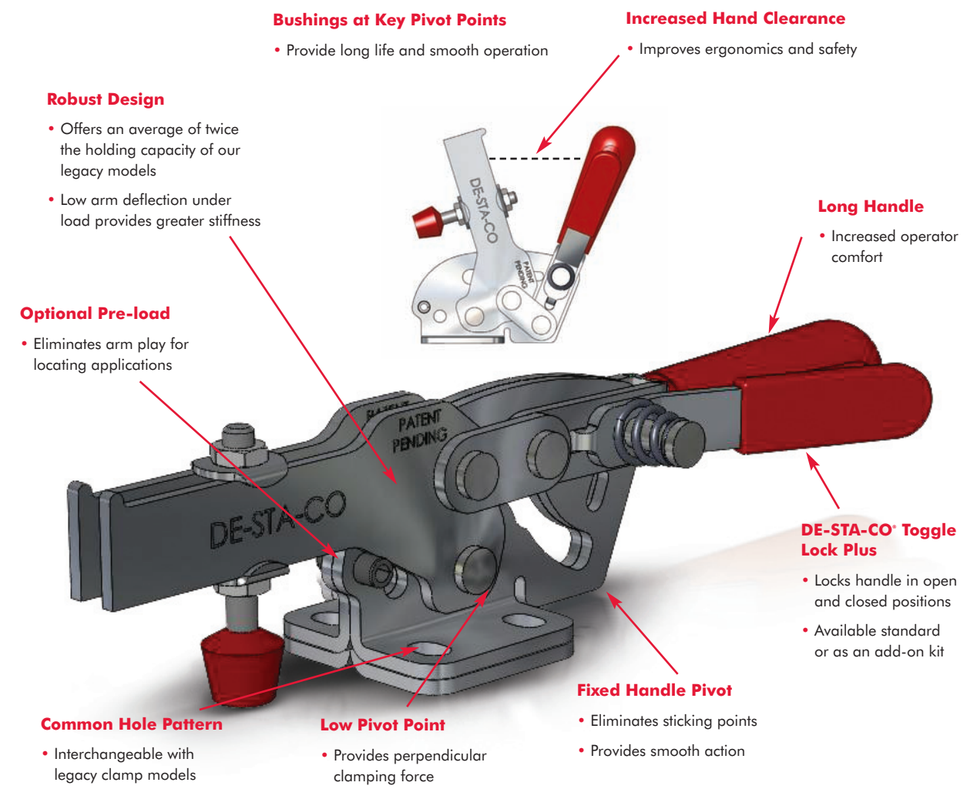

DE-STA-CO's new 2000 Series Horizontal Hold-Down Action Clamps offer an average of twice the holding capacity of our legacy models in the same envelope.

Flexibility. Safety. Performance.

DE-STA-CO
A DOVER COMPANY

www.destaco.com 1.888.DESTACO

Positioning our customers for productivity.

Manual Clamping Technology

NEW

Models 3011,3011-SS:
Heavy-duty, cast latch clamp
Page 6.5

Models 353, 359:
Parting line clamp for molding applications
Page 6.19

Models 425, 435, 445 and 470:
For rugged clamping applications
Pages 7.7, 7.8, 7.9, 7.11

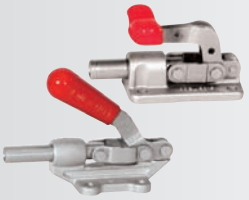

Models 603-SS, 6015-MSS:
New models in stainless steel
Pages 8.13, 8.14

Pneumatic Clamping Technology

NEW

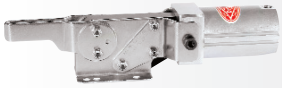

Models 8021, 8071, 8101:
Enclosed clamp for harsh environments
Page 11.11

Model 8031:
Enclosed clamp for harsh environments
Page 11.20

Series 89R:
Slim line of pneumatic swing clamps
Page 12.16

Series 82L:
Enclosed automation power clamp
Page 14.18

DE-STA-CO

Workholding Solutions

NEW

Look for this logo throughout the *Workholding Solutions* catalog to see all our NEW clamping products.

DE-STA-CO

Quality Policy

DE-STA-CO provides quality products and services.

DE-STA-CO has an effective quality system.

DE-STA-CO works with quality suppliers.

DE-STA-CO has a culture of continuous improvement.

DE-STA-CO is committed to on-time delivery.

DE-STA-CO is committed to meeting or exceeding customer requirements.

A DOVER COMPANY

Positioning our customers for productivity.

Contents

Clamping Technology

Introduction 1.6
Holding capacity charts / Ordering no. index 16.1

Manual Clamping Technology


Vertical hold-down clamps 2.1


Horizontal hold-down clamps 3.1


Straight-line action clamps 4.1


Variable stroke straight-line action clamps 5.1


Latch clamps 6.1


Plier clamps 7.1


Stainless steel clamps 8.1


Manual accessories 9.1


CARVER clamps 10.1

Pneumatic Clamping Technology


Standard pneumatic clamps 11.1


Pneumatic swing clamps 12.1


Pneumatic accessories 13.1


Automation power clamps 14.1

Hydraulic Clamping Technology


Actuators 15.23


Power sources 15.33

WORKHOLDING AND AUTOMATION

SOLUTIONS FOR EVERY APPLICATION.

DE-STA-CO offers a comprehensive array of workholding and automation components, as well as customized special products and those designed specifically for the automotive industry. Our diverse lines of complementary products allow us to provide ideal solutions to increase the efficiency and profitability of your operations.

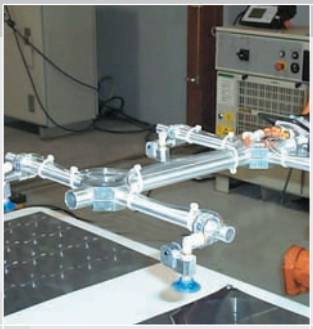

WORKHOLDING

DE-STA-CO has been the leader in workholding products since first inventing the toggle clamp in 1936. Since then, we have maintained the largest selection of manual, hydraulic and pneumatic components on the market. Whatever the size or scope of your application, DE-STA-CO offers the perfect solution to your specific needs.

OUR PRODUCTS ARE IDEAL FOR MOST INDUSTRIES AND MANUFACTURING PROCESSES.

AUTOMATION

DE-STA-CO produces an extensive array of modular automation components, including grippers, end effectors, robotic tooling, slides and linear and rotary actuators. Our broad selection of products is suited to handling anything from tiny, delicate pieces to components too large to move manually. Additionally, our unique DIRECTCONNECT™ technology allows for the customization of an automation system, ensuring a perfect fit for your applications.



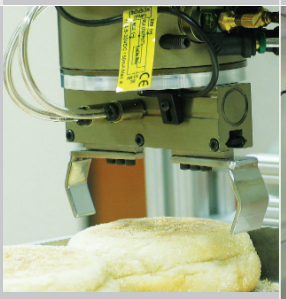




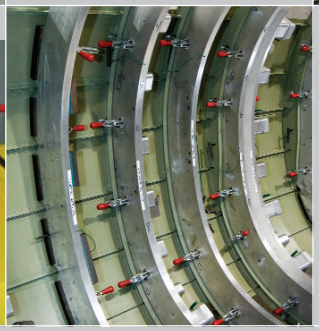

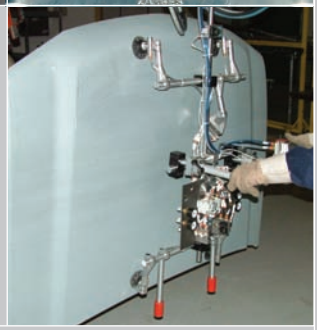

MORE THAN PRODUCTS. COMPLETE SOLUTIONS.

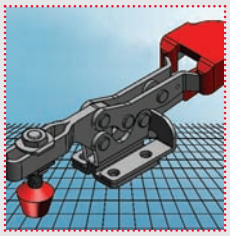

EXTENSIVE CAD CAPABILITIES

To ensure applicability to the broadest possible base of manufacturers, DE-STA-CO supports a wide variety of CAD programs, ranging from Catia to Unigraphics. All CAD formats are accessible through multiple channels, including our cutting-edge online digital catalog, located at www.destaco.com. This web-based 3D CAD library allows engineers to configure individual 3D models from DE-STA-CO's extensive array of workholding and automation products. The intuitive system is part of DE-STA-CO's commitment to providing the exact CAD information you need, whenever you need it.

WWW.DESTACO.COM

Our global website is a constant resource for our customers worldwide. Designed to be a one-stop engineering resource center, our website was developed by engineers for engineers. Presented in multiple languages, www.destaco.com provides detailed comprehensive product information, data sheets and CAD information twenty-four hours a day, seven days a week.

OUR GLOBAL WEBSITE ALSO OFFERS:

- Access to local sales representatives and dealers
- Sizing software
- Customer service access
- Expert application advice
- Training information
- Downloadable literature

TECHNICAL EXPERTISE, SERVICE AND SUPPORT

At DE-STA-CO, we maintain the highest possible standards of service and support across all of our product offerings. Our employees possess extensive engineering knowledge and receive comprehensive training on all of our products. When you partner with DE-STA-CO, you work with specialists that fully understand your operations, our products and how the two work together to provide you with value. Our customer service staff is available via a toll-free phone line, fax, email and our company website, so that you can reach us through whatever medium is most convenient.

What you should know about manual quick-action toggle clamps from DE-STA-CO

Your requirements

Workpieces need to be held in a specific position using a specific amount of force in the shortest period of time. Once the workpiece is clamped, the processing of it is usually carried out. This means that the following tasks must be fulfilled using clamping products:

- Quick clamping
- Secure holding
- High clamping forces in a variety of space requirements
- Distortion-free clamping of the workpiece
- Good accessibility to the workpiece

These requirements are fulfilled successfully and reliably using clamping products from DE-STA-CO.

Workpieces are clamped in nearly all applications of a manufacturing environment. In the metalworking industry, reliable clamping is a basic requirement for drilling, welding, bending, grinding, testing, assembling, etc.

Additional applications that use DE-STA-CO clamping products:

- Automobile industry
- Electrical industry
- Woodworking industry
- Plastics industry
- Textile industry
- Chemical industry
- Food industry

We can also help you with any clamping tasks that may arise in other applications not mentioned above.

Manual Clamping Technology

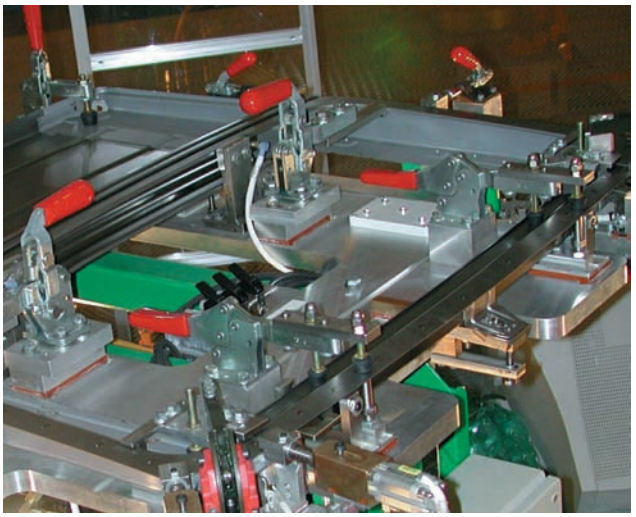

Pneumatic Clamping Technology

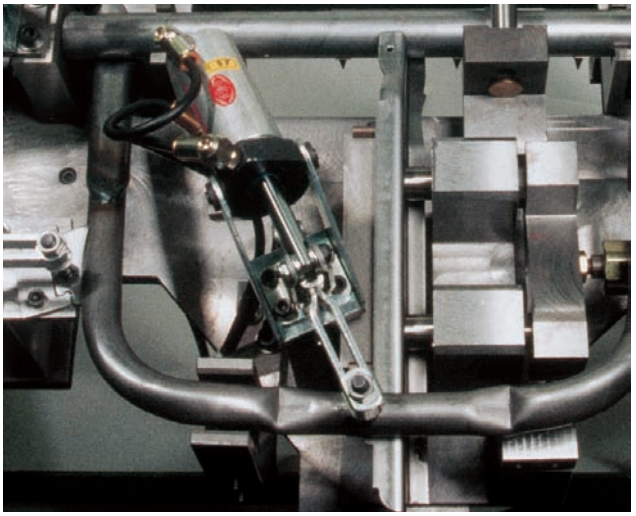

Hydraulic Clamping Technology

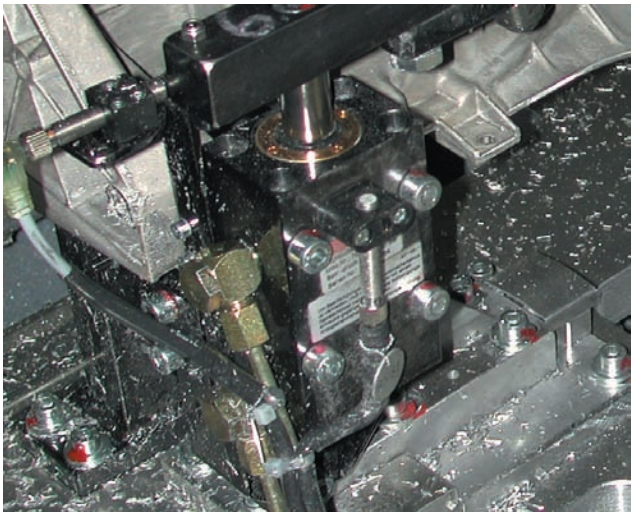

What you should know about manual quick-action toggle clamps from DE-STA-CO

How Toggle Action Works

Toggle action clamps operate through a linkage system of levers and pivots. The fixed-length levers, connected by pivot pins, supply the action and clamping force. Toggle action has an over-center lock point which is a fixed stop and linkage. Once in the over-center position, the clamp cannot move or unlock unless the linkage is moved. All types of toggle clamps have this same action, just oriented differently.

Toggle Action Force Factors

The maximum clamping or exerting force developed in any toggle action clamp is attained when the three pivot points of the mechanism are in a straight line. While this is theoretically true, it makes no allowance for vibration and intermittent load conditions found in industrial applications. Such conditions would soon unlock an improperly designed clamp. The proper amount of over-center travel to produce maximum holding force and yet ensure positive locking is a carefully calculated and controlled dimension developed by years of experimentation and experience.

Throughout this catalog each clamp is rated with its "holding capacity." This is the maximum load or force the clamp will sustain in the closed and locked position without permanent deflection. Exerting forces applied as the clamp closes are less than the holding capacity, and are dependent on variables such as the position of the operator's hand on the handle; amount of force applied; and position of the spindle on the bar.

Toggle Action Principle

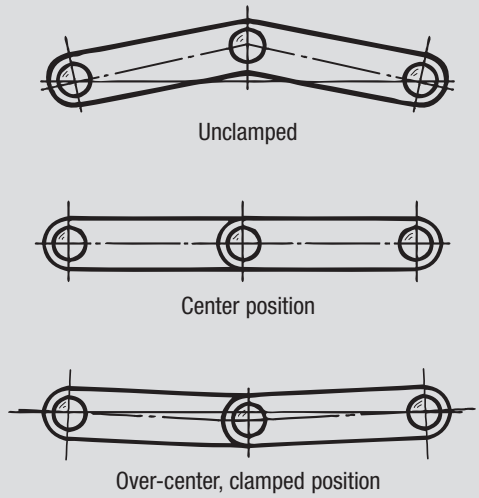

Toggle Action Clamps Compared With Cam Action Clamps

Cam action uses frictional force to effect a locking condition between the cam surface on the bar and the follower on the handle. Toggle action clamps have many advantages over cam action clamps, mainly because cam action clamps allow some movement while clamping. Toggle action clamps thus provide a more consistent clamping point, can be manufactured from inexpensive materials, and are available in stainless steel for outdoor or corrosive applications. If the material being clamped has a variable thickness, however, a cam action clamp has the ability to better accommodate this application.

www.destaco.com

Our homepage

By visiting www.destaco.com on the Internet, you can obtain the following information:

- Product overviews with custom searching options
- CAD downloads
- DE-STA-CO news and new products
- Trade show calendar
- Sales support in your immediate area
- Application examples

The CAD-Library

- Please visit www.destaco.com to receive all of our free CAD files, including native files in .dwg, .dxf, .sat, .iges, .step formats

DE-STA-CO: the “Original”

The details

The clever, safety link
- Reduces pinch points during operation
- One of the many safety features of DE-STA-CO clamps

The sturdy clamping bar
- Ensures high holding capacities due to high rigidity
- Lateral guide in the base

The bonded neoprene spindle
- Protects sensitive workpieces
- Long service life
- High degree of flexibility and adaptation to the application
- Standard feature in all horizontal and vertical models

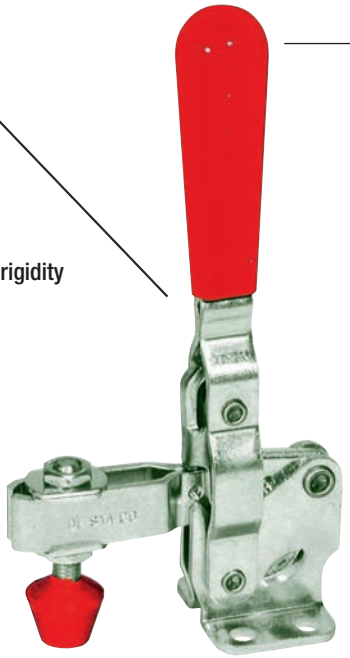

The standard handle
- Ergonomically shaped, for ease of operation
- Oil-resistant, suitable for many different uses
- The “Red Handle” – the Original

The long-lasting construction
- Heavy-duty rivet made of stainless steel
- Heavy-duty rivet is oiled during assembly
- Hardened knurled bushings

What about the forces?

In the case of clamping products, a clear distinction must be made between exerting forces and holding capacities. Here are the essential features:

Exerting or Clamping Force

The “exerting force” of our air toggle clamps is well defined and can be found on page 11.22. Manually operated clamps present a series of variables to determine actual exerting force.

These variables are:

(a) the force exerted on the handle by the operator;
(b) the point on the handle where this force is applied;
(c) the mechanical advantage in the linkage; and
(d) the point on the work holding bar where the force will be measured. As a general rule, the mechanical advantage available throughout the line ranges from 2:1 to 10:1

Holding Capacity

The “holding capacity” of DE-STA-CO toggle clamps has been determined by actual tests. It is defined as the maximum amount of force which may be applied to the work holding bar, in the closed position, without creating permanent deformation of the clamp components. This maximum force is measured at a point closest to the base and diminishes as the spindle approaches the end of the bar. The ratings for holding capacity are maximum and should not be exceeded. These values include a safety factor.

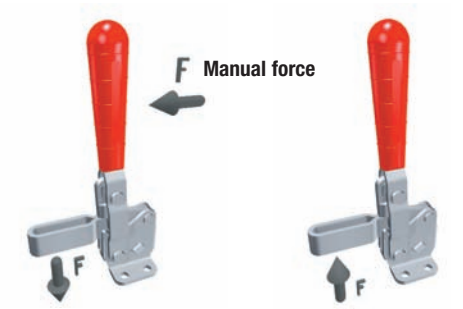

Exerting force Holding capacity

How to find the most suitable clamp?

The following criteria will narrow the selection of the clamp type

- The type of fixture
- The required holding capacities
- The size conditions in and around the fixture
- Action required by clamp to perform required task

The most important models at a glance

Vertical hold-down clamp

- Handle is vertical in clamped position
- Holding capacity 100 - 5,000 lbs.
- Opening angle between 65° and 215°

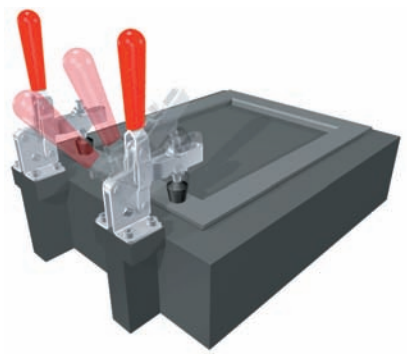

Horizontal hold-down clamp

- Very low profile
- Handle is horizontal in the clamped position
- Holding capacity 60 - 1,000 lbs.
- Opening angle between 90° and 105°

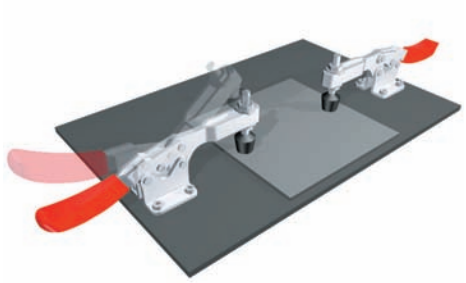

Straight line action clamp

- Forward movement of the handle pushes the plunger into the forward position
- Can be used as a push clamp and pull clamp, locking in two positions
- Holding capacity 100 - 16,000 lbs.

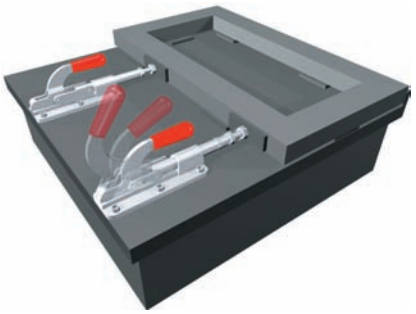

Latch clamp

- Convenient one-hand operation due to the patented thumb control lever
- Compact models
- Holding capacity 200 - 7,500 lbs.

Plier clamps

- Flexible clamping and fixturing
- Also equipped with quick release lever
- Holding capacity 100 - 2,000 lbs.

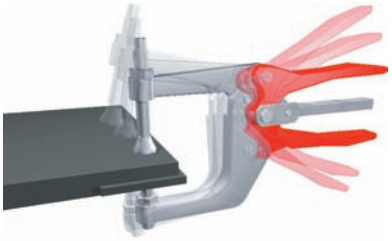

How to find the most suitable hold-down clamp?

In the case of the vertical and horizontal clamps, there are variations in the clamping bars and clamp bases:

U-shaped clamp bar

- Allows for the adjustment of the spindle in the horizontal position

Solid clamp bar

- Can be cut individually in various lengths and angles
- Bolt retainer is used to attach the spindle

Flanged mounting base

- For mounting on flat surfaces

Straight mounting base

- For mounting on vertical surfaces or with a blade

Selecting The Proper DE-STA-CO Clamp

The information contained in this catalog is designed to help you select the right clamp to accomplish your job. DE-STA-CO distributor personnel, as well as DE-STA-CO's engineering department, are qualified and willing to offer assistance in special or unusual applications. For most ordinary applications, however, consideration of the following points will lead to the proper clamp selection:

- Size and shape of the parts to be held.
- Uniformity of part size (Should you consider a spring-loaded spindle to compensate for uneven parts?)
- Holding capacity required
- Strength and dexterity of the operator
- Operator's position (Should you use horizontal or vertical handle models?)
- Frequency of operation (Should you plan for a temporary or permanent fixture?)
- Time cycle of operation (Should you consider a turntable or conveyor set-up if curing time is required?)
- Cycling time and sequence (Should you consider air-operated models that can be operated faster and in sequence?)
- Environment (Should you consider stainless steel, aluminum or lightweight composite models?)

Processing Applications

Remember, the same toggle action force multiplying principle can be applied to other tasks besides holding. Certain DE-STA-CO models can be used to position parts, power fixtures or perform mechanical functions such as piercing sheet metal, staking rivets or locating.

OEM Applications

DE-STA-CO clamps provide ready-made, compact devices for moving or holding components. A little imagination will often show the product designer a way to obtain motion or locking force with no tooling costs and often at less cost than custom designed components. Thousands of DE-STA-CO clamps will be found installed as original equipment for cleanout door latches, wheel locks, positioning devices, etc.

Safety

Our concern is not only the constant high quality of our products, but also their fail-safe and foolproof handling. The knowledge gathered since 1936 guarantees a developed, safe and high-quality clamping unit.

A certain clamping force will be necessary to safely hold a part. This force is determined by taking the following into account:

(a) the part material: such as, steel, wood, plastic or glass, etc.
(b) the surface finish of the part: such as, polished, hard or soft, etc.
(c) the machining or assembly operation: such as, milling, welding, drilling, bonding, joining or sealing a mold, etc.

In order to ensure clamp strength is not compromised, use all the mounting holes provided.

Red handle grips are provided on each model. Users should only locate their hand in this area when operating the clamp, thus reducing the possibility of injury.

Safety Handle

This ergonomic handle provides greater operator comfort.

Safety Feature

This safety link prevents accidental injury to an operator when opening the clamp.

Clamp Series

201, 202, 207, 210, 247, 267

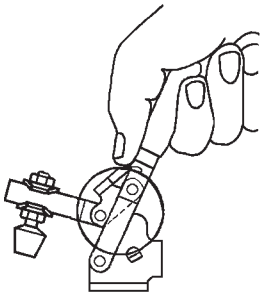

Safety Distance

Exclusive handle design gives more hand clearance between bar and handle when clamp is in fully open position.

Clamp Series

213, 217, 227, 237, 245

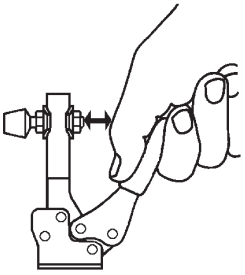

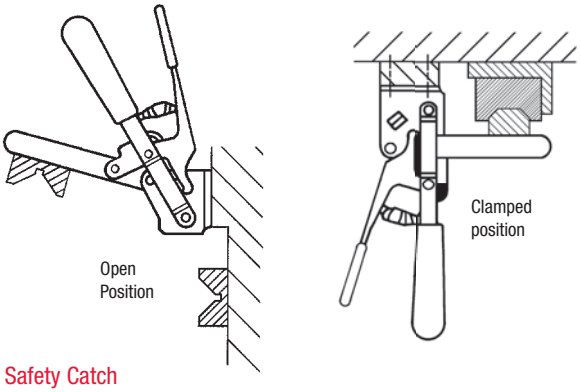

Safety Catch

Handle or clamping arm on our DE-STA-CO® Toggle Lock Plus Clamps lock in the open or closed position.

Clamp Series

207-LR, 207-UR, 210-SR, 210-UR

Introduction

Specifications

Materials, finishes, treatments, etc. of DE-STA-CO products are changed from time-to-time to improve performance or reliability. These items are, naturally, subject to change without notice. In the interest of catalog longevity they are not discussed in detail throughout the catalog pages.

As of the date of going to press, however, the following specifications were in force and can be considered reasonably stable:

Forgings

Forged components (notably the squeeze action clamps) are made from C-1141 material and heat treated to RC 28-34 to improve resistance to bending and create a wear surface for the pivot pins.

Castings

Used for bases on some of the larger clamps, castings are made of ductile iron, heat treated to properties of steel. They have the wear resistance of iron together with greater strength and excellent shock and impact resistance.

Composite Materials

Clamp components and spindle assemblies are molded of Nylon 6/6 with 30% glass fiber reinforcement. Nylon is inert to most organic chemicals such as esters, ketones, alcohols and hydrocarbons. It resists alkalis and salt solutions, but is attacked by phenols, formic acid, strong mineral acids and oxidizing agents. Maximum temperature is 170° F.

Stainless Steel

Series 300 (normally an 18-8 type 302-304) giving increased resistance to chemical and acid attacks.

This is a heat-resisting steel, non-magnetic in the annealed state and slightly magnetic when cold worked. Used in the chemical, photographic, pharmaceutical, aircraft, dairy and food processing industries, marine applications, and for surgical and dental equipment.

NOTE: Rivets are 430 stainless steel. Contact the factory to determine if optional series 300 rivets are available.

Plating

The plating on most steel toggle clamp parts is a zinc plating with a bright finish, which conforms to government specification QQZ325C Type 1, Class 3. Zinc plating typically has a useful service temperature of 250˚F (120˚C), but its corrosion inhibiting properties begin to degrade at 140˚F (60˚C). Many cast and forged bases are black oxide finished.

Power Clamps

Power clamps can be actuated by pneumatic pressure or hydraulic fluid. Most of the cylinders are of tie-rod construction for maximum strength and have hard chrome-plated or ground stainless steel piston rods. Rod seals are generally a quad-seal. The small bore cylinders, through 1-1/8", also have quad-seals for piston seals and the larger bores have U-cups. The standard cylinder is supplied with Buna N seals and may be operated over a temperature range of -40° to +250° F. Also available is a high temperature seal kit with Viton seals, which extends the temperature range from -20° to +400° F. It also can be used in service with most of the exotic fluids.

Miscellaneous

The standard light and medium-duty clamps are made from C-1008 or C-1010 low carbon, cold-rolled steel. The work holding clamp bars and other components of our medium and heavy-duty clamps are made from C-1018, a cold finished, low carbon, case hardening steel.

The pivot pins in most of our clamp models are very close-tolerance, cold-drawn, 430 stainless steel headed rivets. In the heavy-duty models, hardened and ground replaceable pins are used.

Bushings are made of low carbon steel, case hardened for wear and serrated on the circumference to ensure non-rotating, long-wearing bearing surface for the pivot pins.

Spindle assemblies are made from cold-drawn bar, Grade 2, and plated with zinc. The bonded spindle tip is oil-resistant, black neoprene with a durometer of 70-80 Shore A to provide adequate compressibility and resiliency.

Mounting The Clamp

To properly secure the clamp to the mounting surface, all mounting holes provided must be used.

Modifications

Making changes to our clamps may affect the performance of the product. The life expectancy of a clamp is dependent upon many factors, including alterations to the bar, handle or the addition of tooling. For any modification, the maximum rated capacities should not be exceeded.

Clamp Ratings

Our clamps are rated using manual, hand power to actuate them. The use of cheater bars or hammers to impact the opening or closing of the clamp is expressly prohibited.

All the vertical and horizontal clamps are equipped with flanged washers/bolt retainers and bonded neoprene spindles (large models have hex head spindles). Models with heavy-duty clamping bars are equipped with a bolt retainer and are supplied without a spindle.

The model number addition "-LS" also allows you to order the clamp without any spindle accessories. In this case, only flanged washers are supplied.

e.g. Model 207-U

e.g. Model 207-U-LS

With our wide variety of accessories, you can customize the functionality of the clamp to suit your specific requirements.

Available accessories include:

Adjustment Spindles
- With bonded neoprene pads
- With swivel foot
- With hex head
- With pressurematic spring loaded variability

Neoprene Caps
- Hex head adjustment spindles slip on for easy replacement
- For protection of the workpiece

Flanged washers
- For attachment of the adjustment spindles to U-shaped clamping bars

Bolt retainers
- For attachment of the adjustment spindles to solid, heavy-duty clamping bars

Crossarm sets
- Bridge for assembly of 2 adjustment spindles for multiple position clamping

Model number code

The model number code is used to distinguish between the following features:

- Size
- Model
- Constructional features

2 07 - U - LS

Accessories option

LS = less spindle (without pressure spindle)

Model/feature

U = U-shaped clamp bar
S = Solid clamp bar
B = Straight mounting base
R = Base flanged to the right
F = Front mounting base attachment
R = Release lever (additional safety lock)
SS = Stainless steel version
L = Base flanged to the left
L = Model with extra-long bars
SQ = Square plunger
T = “T” handle
M = Metric plunger

Design size

Model type/series

2 = Vertical hold-down clamp
2 = Horizontal hold-down clamp
3 = Compact hold-down clamp
3 = Latch clamp
4 = Plier clamp
5 = Modular or heavy-duty vertical and horizontal clamp
6 = Straight line action clamp

NEW

The new 2000-Series: Strong and Compact

This revolutionary new DE-STA-CO toggle clamp series features high holding forces and a compact design, greater clearance, pinch point elimination, vertical movement of the spindle, no workpiece movement, open, long clamping arm for more flexibility and optimized stop point location for more durability.

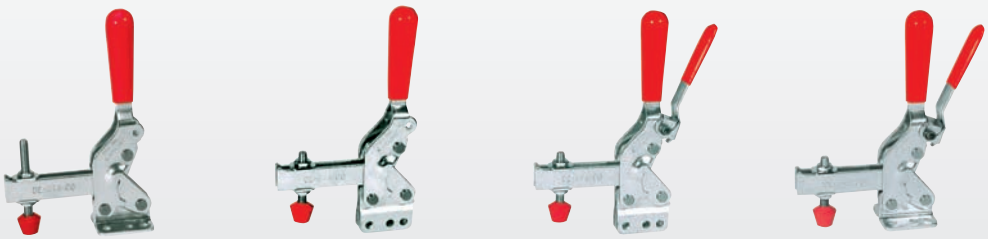

page 2.12

Product group – vertical clamps

Application areas

Clamping during the assembling, drilling, testing, gluing, locking of covers and much more. The vertical clamp is the most frequently used product whenever clamping products are to be integrated with a manual fixture.

The essential product features

In the clamping position, the handle is vertical
Vertical clamps open at an angle between 90° and 215°
Vertical clamps are offered with U-shaped or heavy-duty solid clamping bars
Vertical clamps have a straight or flanged base. The heavy-duty vertical clamps possess a base that can be welded on without a hole pattern

Model 210-U clamping a frame

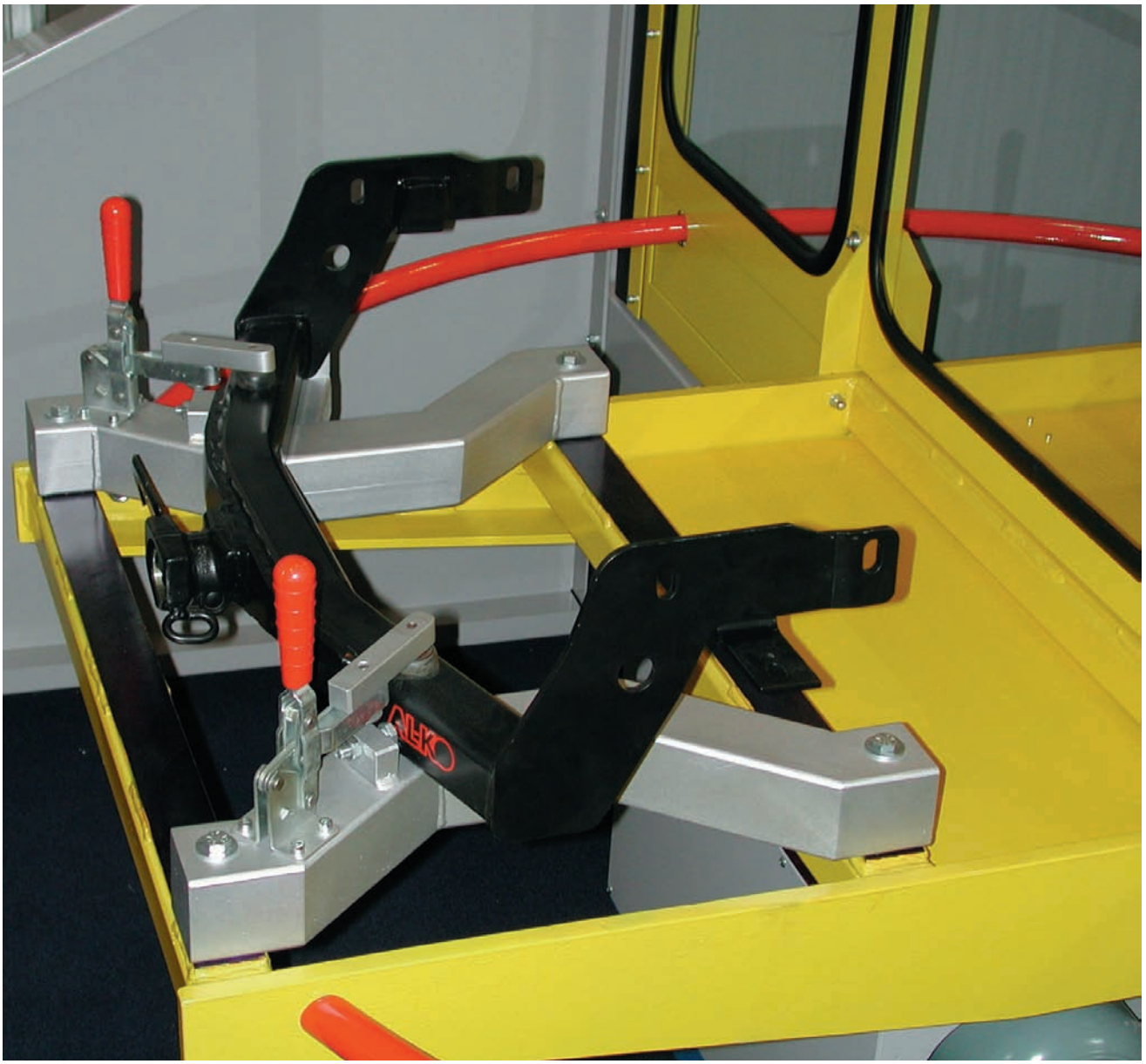

	Model no.	Holding Capacity max. [lbs.]	Category	Page
	2002-S 2007-S 2010-S	600 1,000 1,400	NEW! Standard NEW! Standard NEW! Standard	2.7
	2002-SB 2007-SB 2010-SB	600 1,000 1,400	NEW! Standard NEW! Standard NEW! Standard	2.7
	2002-SBR 2007-SBR 2010-SBR	600 1,000 1,400	NEW! DE-STA-CO® Toggle Lock Plus NEW! DE-STA-CO® Toggle Lock Plus NEW! DE-STA-CO Toggle Lock Plus	2.8
	2002-SR 2007-SR 2010-SR	600 1,000 1,400	NEW! DE-STA-CO® Toggle Lock Plus NEW! DE-STA-CO® Toggle Lock Plus NEW! DE-STA-CO® Toggle Lock Plus	2.8
	2002-U 2007-U 2010-U	600 1,000 1,400	NEW! Standard NEW! Standard NEW! Standard	2.9
	2002-UB 2007-UB 2010-UB	600 1,000 1,400	NEW! Standard NEW! Standard NEW! Standard	2.9
	2002-UBR 2007-UBR 2010-UBR	600 1,000 1,400	NEW! DE-STA-CO® Toggle Lock Plus NEW! DE-STA-CO® Toggle Lock Plus NEW! DE-STA-CO® Toggle Lock Plus	2.10
	2002-UR 2007-UR 2010-UR	600 1,000 1,400	NEW! DE-STA-CO® Toggle Lock Plus NEW! DE-STA-CO® Toggle Lock Plus NEW! DE-STA-CO® Toggle Lock Plus	2.11

	Model no.	Holding Capacity max. [lbs.]	Category	Page
	202 207-L 207-S 210-S 247-S 267-S	200 500 500 750 1,000 1,200	Standard Standard Standard Standard Standard Standard	2.12
	202-B 207-LB 207-SB 210-SB 247-SB	200 500 500 750 1,000	Standard Standard Standard Standard Standard	2.13
	207-LR 210-SR	500 750	DE-STA-CO® Toggle Lock Plus DE-STA-CO® Toggle Lock Plus DE-STA-CO® Toggle Lock Plus	2.14
	207-LBR 210-SBR	500 750	DE-STA-CO® Toggle Lock Plus DE-STA-CO® Toggle Lock Plus	2.15
	202-T 207-TS 210-TS	200 500 750	Standard Standard Standard	2.16
	202-TB	200	Standard	2.16
	201-TU 202-TU 207-TU 207-TUL 210-TU	100 200 375 375 600	Standard Standard Standard Standard Standard	2.17
	201-U 202-U 202-UL 207-U 207-UL 207-U0 210-U 247-U 267-U	100 200 375 375 375 375 600 1,000 1,200	Standard Standard Standard Standard Standard Standard Standard Standard Standard	2.18

Product group – vertical clamps

	Model no.	Holding Capacity max. [lbs.]	Category	Page
	201-UB 202-UB 207-UB 207-ULB 210-UB 247-UB 267-UB	100 200 375 375 600 1,000 1,200	Standard Standard Standard Standard Standard Standard Standard	2.20
	207-UR 210-UR	375 600	DE-STA-CO® Toggle Lock Plus DE-STA-CO® Toggle Lock Plus	2.22
	207-UBR 210-UBR	375 600	DE-STA-CO® Toggle Lock Plus DE-STA-CO® Toggle Lock Plus	2.23
	219 229	350 1,000	Standard Standard	2.24
	516 516-B	750 750	Standard Standard	2.25
	518	500	Standard	2.26
	528 528-F	1,000 1,000	Heavy-duty Heavy-duty	2.27
	548 578 588	2,000 4,000 6,200	Heavy-duty Heavy-duty Heavy-duty	2.28

	Model no.	Holding Capacity max. [lbs.]	Category	Page
	558 568	2,500 3,300	Heavy-duty Heavy-duty	2.29
	533-L 535-L	1,500 2,200	NEW! Heavy-duty NEW! Heavy-duty	2.30
	533-LB 535-LB 536-LB	1,500 2,200 2,900	NEW! Heavy-duty NEW! Heavy-duty NEW! Heavy-duty	2.31
	501-B 503-MB 503-MBLSC 505-MB 505-MBLSC 506-MB 506-MBLSC	560 1,500 1,500 2,400 2,400 5,000 5,000	Modular Modular Modular Modular Modular Modular Modular	2.33
	501-LB 503-MLB 503-MLBLSC 505-MLB 505-MLBLSC 506-MLB 506-MLBLSC	560 1,500 1,500 2,400 2,400 5,000 5,000	Modular Modular Modular Modular Modular Modular Modular	2.34
	7-101 7-58 7-59 7-60 7-61	475 600 1,000 1,600 3,750	Cam Action Cam Action Cam Action Cam Action Cam Action	2.36
	207-SF	500	NEW! Standard	2.37
	207-UF	375	NEW! Standard	2.38

	Model no.	Holding Capacity max. [lbs.]	Category	Page
	317-S	375	Standard	2.39
	317-U	375	Standard	2.40
	527	1,000	Standard	2.41
	527-F	1,000	Standard	2.42
	557	2,500	Standard	2.42
	91090 91140	385 1,000	Standard	2.43
	VH3	200	Composite	2.43

2000-Series, vertical clamps

NEW

Strength: 2-3 times higher Holding Capacity

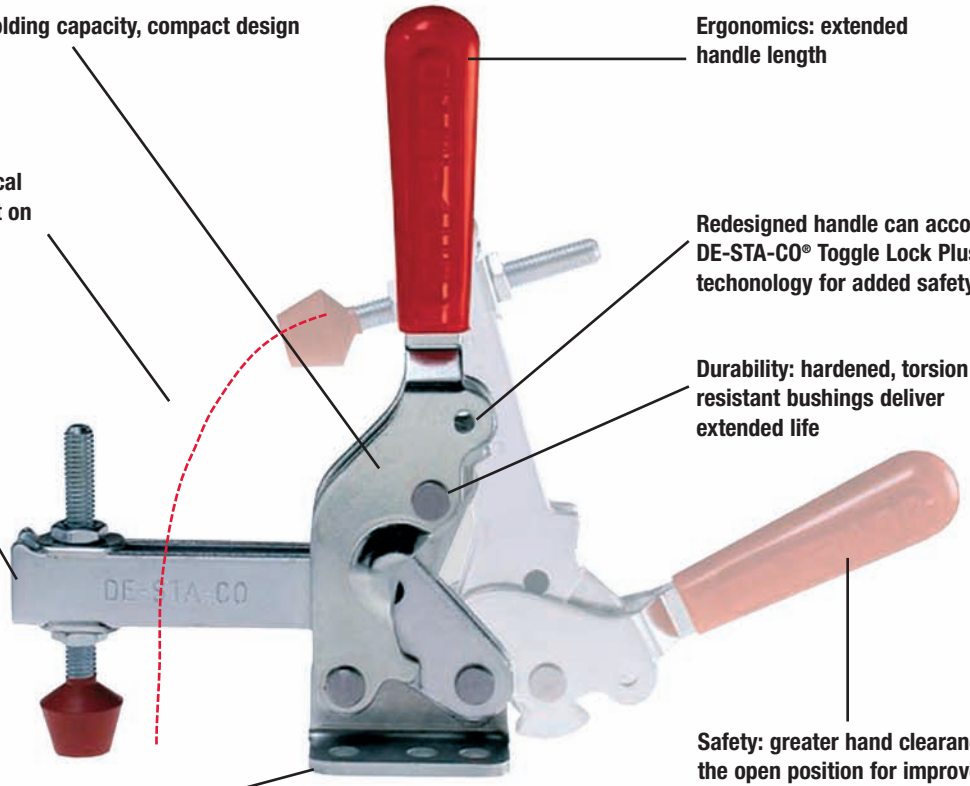

Main Benefits:

1. **High holding capacity, compact design**
2. **Greater hand clearance, pinch point elimination**
3. **Vertical movement of the spindle, no workpiece movement**
4. **Open, long clamping bar for more flexibility**
5. **Optimized handle stop location for more durability**

Application areas:

Ideal for fixtures and applications with restricted space where high holding capacity is required.

Product features:

All pivot points are bushed yielding high lifecycles
Rivets made of stainless steel to reduce wear
Improved material thickness for high durability
Ergonomically shaped handle for operator comfort

Patent No. 6,595,507

NEW

Models 2002-S, 2007-S, 2010-S

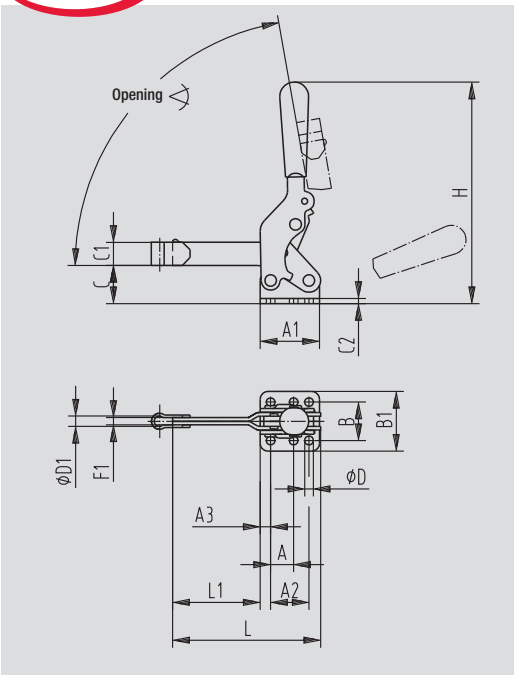

Model no.	Holding Capacity [lbs.]	Bar Opening +10°	Handle Moves	[lbs.]	Bolt Retainer	Spindle Size (Not Supplied)
2002-S	600	75°	85°	0.48	2002115-E	1/4 or M6
2007-S	1,000	80°	76°	1.20	2007115-E	5/16 or M8
2010-S	1,400	80°	83°	2.56	2010115-E	3/8 or M10

See additional adjustment spindles beginning on page 9.1

Solid clamping bar with bolt retainer
Flanged base

Patent No. 6,595,507

Model no.	A	A1	A2	A3	B	B1	C	C1	C2	øD	øD1	F1	H	L	L1
2002-S	0.50	1.36	0.90	0.24	1.06	1.52	0.95	0.49	0.12	0.22	0.22	0.25	5.47	3.29	1.93
2007-S	0.75	1.93	1.25	0.33	1.25	1.94	1.25	1.24	0.16	0.28	0.28	0.34	7.64	4.81	2.88
2010-S	–	2.53	1.25	0.63	1.78	2.62	1.70	1.12	0.20	0.34	0.34	0.44	9.61	6.09	3.56

NEW

Models 2002-SB, 2007-SB, 2010-SB

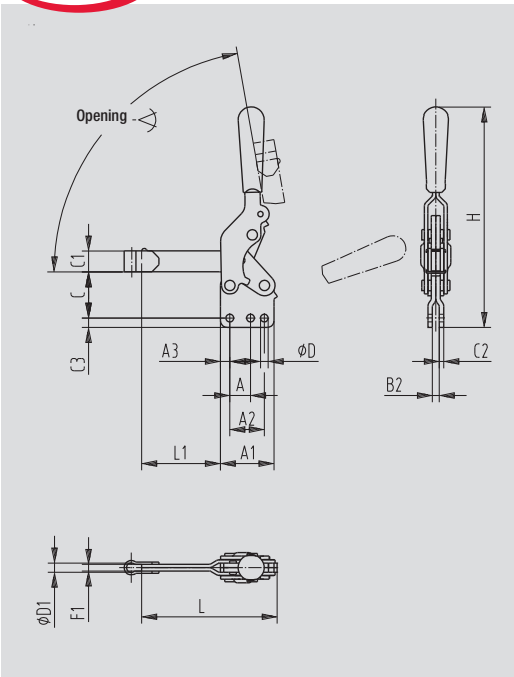

Model no.	Holding Capacity [lbs.]	Bar Opening +10°	Handle Moves	[lbs.]	Bolt Retainer	Spindle Size (Not Supplied)
2002-SB	600	75°	85°	0.48	2002115-E	1/4 or M6
2007-SB	1,000	80°	76°	1.20	2007115-E	5/16 or M8
2010-SB	1,400	80°	83°	2.56	2010115-E	3/8 or M10

See additional adjustment spindles beginning on page 9.1

Solid clamping bar with bolt retainer
Straight base

Patent No. 6,595,507

Model no.	A	A1	A2	A3	B2	C	C1	C2	øD	øD1	F1	H	L	L1
2002-SB	0.50	1.36	0.90	0.24	0.24	1.27	0.49	0.12	0.22	0.22	0.25	5.47	3.29	1.93
2007-SB	0.75	1.93	1.25	0.33	0.24	1.68	1.24	0.16	0.28	0.28	0.34	7.64	4.81	2.88
2010-SB	–	2.53	1.25	0.63	0.31	2.20	1.12	0.20	0.34	0.34	0.44	9.61	6.09	3.56

Models 2002-SBR, 2007-SBR, 2010-SBR

NEW

Model no.	Holding Capacity [lbs.]	Bar Opening +10º	Handle Moves	[lbs.]	Bolt Retainer	Spindle Size (Not Supplied)
2002-SBR	600	75°	85º	0.48	2002115-E	1/4 or M6
2007-SBR	1,000	80°	76º	1.20	2007115-E	5/16 or M8
2010-SBR	1,400	80°	83º	2.56	2010115-E	3/8 or M10

See additional adjustment spindles beginning on page 9.1.

DE-STA-CO® Toggle Lock Plus
Solid bar with bolt retainer
Straight base

Patent No. 6,595,507

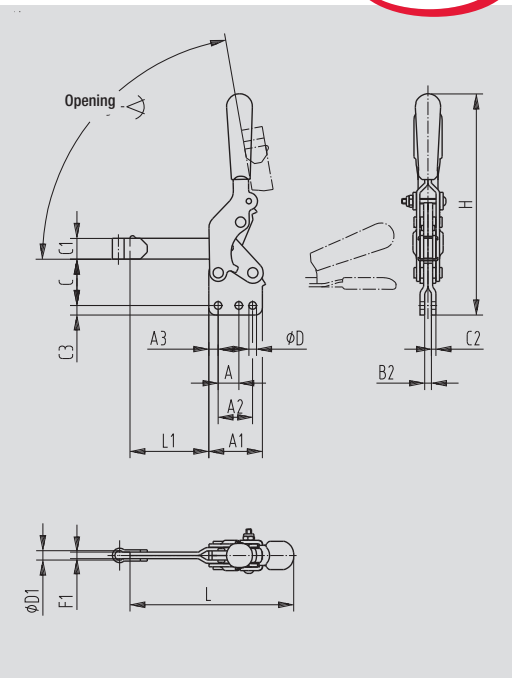

Model no.	A	A1	A2	A3	B2	C	C1	C2	øD	øD1	F1	H	L	L1			
2002-SBR	0.50	1.36	0.90	0.24	0.24	1.27	0.49	0.12	0.22	0.22	0.25	5.47	4.17	1.93			
2007-SBR	0.75	1.93	1.25	0.33	0.24	1.68	1.24	0.16	0.28	0.28	0.34	7.64	5.94	2.88			
2010-SBR	–	2.53	1.25	0.63	0.31	2.20	1.12	0.20	0.34	0.34	0.44	9.61	7.28	3.56			

Models 2002-SR, 2007-SR, 2010-SR

NEW

Model no.	Holding Capacity [lbs.]	Bar Opening +10º	Handle Moves	[lbs.]	Bolt Retainer	Spindle Size (Not Supplied)
2002-SR	600	75°	85º	0.48	2002115-E	1/4 or M6
2007-SR	1,000	80°	76º	1.20	2007115-E	5/16 or M8
2010-SR	1,400	80°	83º	2.56	2010115-E	3/8 or M10

See additional adjustment spindles beginning on page 9.1.

DE-STA-CO® Toggle Lock Plus
Solid bar with bolt retainer
Flanged base

Patent No. 6,595,507

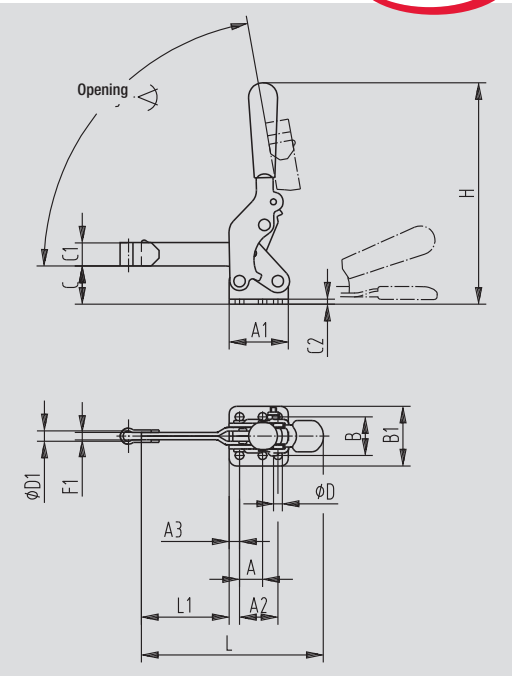

Model no.	A	A1	A2	A3	B	B1	C	C1	C2	øD	øD1	F1	H	L	L1
2002-SR	0.50	1.36	0.90	0.24	1.06	1.52	0.95	0.49	0.12	0.22	0.26	0.25	4.73	4.17	1.93
2007-SR	0.75	1.93	1.25	0.33	1.25	1.94	1.25	1.24	0.16	0.28	0.33	0.34	7.21	5.94	2.88
2010-SR	–	2.53	1.25	0.63	1.78	2.62	1.70	1.12	0.20	0.34	0.45	0.44	9.00	7.28	3.56

NEW

Models 2002-U, 2007-U, 2010-U

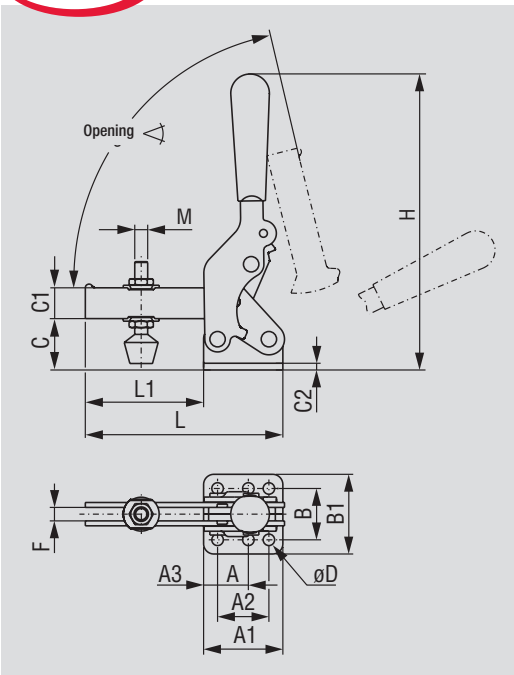

Model no.	Holding Capacity [lbs.]	Bar Opening +10°	Handle Moves	[lbs.]	Standard equipment	Flanged Washers
2002-U	60	75°	85°	0.48	215208-M	215105
2002-U-LS					without spindle	215105
2007-U	1,000	80°	76°	1.20	2007208-M	507107
2007-U-LS					without spindle	507107
2010-U	1,400	80°	83°	2.56	240208-M	235106
2037-U-LS					without spindle	235106

See additional adjustment spindles beginning on page 9.1.

U-bar
Flanged base

Patent No. 6,595,507

Model no.	A	A1	A2	A3	B	B1	C	C1	C2	øD	F	H	L	L1	M
2002-U	0.50	1.36	0.90	0.24	1.06	1.52	0.95	0.49	0.12	0.22	0.25	4.73	3.29	1.93	M6
2007-U	0.75	1.93	1.25	0.33	1.25	1.94	1.25	1.24	0.16	0.28	0.34	7.21	4.81	2.88	M8
2010-U	–	2.53	1.25	0.63	1.78	2.62	1.70	1.12	0.20	0.34	0.44	9.00	6.09	3.56	M10

NEW

Models 2002-UB, 2007-UB, 2010-UB

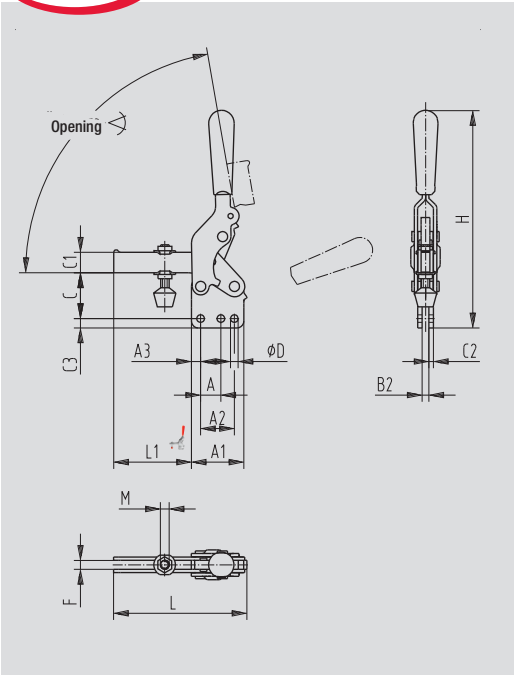

Model no.	Holding Capacity [lbs.]	Bar Opening +10°	Handle Moves	[lbs.]	Standard equipment	Flanged Washers
2002-UB	600	75°	85°	0.48	215208-M	215105
2002-UB-LS					without spindle	215105
2007-UB	1,000	80°	76°	1.20	2007208-M	507107
2007-UB-LS					without spindle	507107
2010-UB	1,400	80°	83°	2.56	240208-M	235106
2037-UB-LS					without spindle	235106

See additional adjustment spindles beginning on page 9.1.

U-bar
Straight base

Patent No. 6,595,507

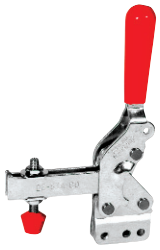

Model no.	A	A1	A2	A3	B2	C	C1	C2	øD	F	H	L	L1	M
2002-UB	0.50	1.36	0.90	0.24	0.24	1.27	0.49	0.12	0.22	0.25	5.07	3.29	1.93	M6
2007-UB	0.75	1.93	1.25	0.33	0.24	1.68	1.24	0.16	0.28	0.34	7.64	4.81	2.88	M8
2010-UB	–	2.53	1.25	0.63	0.31	2.20	1.12	0.20	0.34	0.44	9.61	6.09	3.56	M10

Models 2002-UBR, 2007-UBR, 2010-UBR

NEW

Model no.	Holding Capacity [lbs.]	Bar Opening +10°	Handle Moves	[lbs.]	Standard equipment	Flanged Washers
2002-UBR	600	75°	85°	0.48	215208-M	215105
2002-UBR-LS					without spindle	215105
2007-UBR	1,000	80°	76°	1.20	2007208-M	507107
2007-UBR-LS					without spindle	507107
2010-UBR	1,400	80°	83°	2.56	240208-M	235106
2037-UBR-LS					without spindle	235106

See additional adjustment spindles beginning on page 9.1.

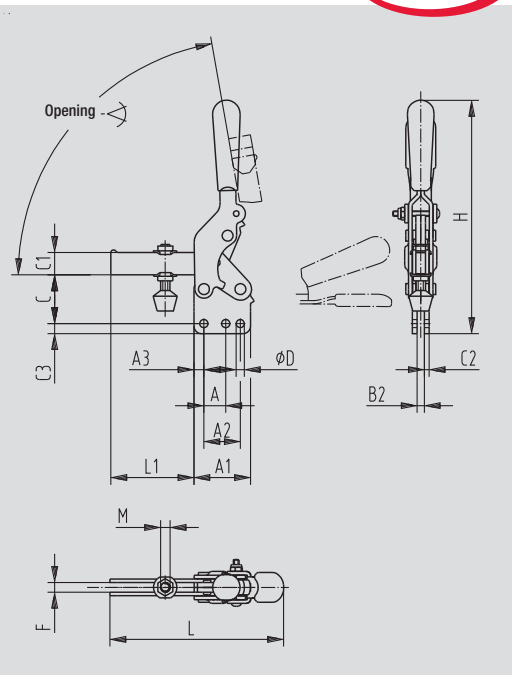

DE-STA-CO® Toggle Lock Plus
U-bar
Straight base

Patent No. 6,595,507

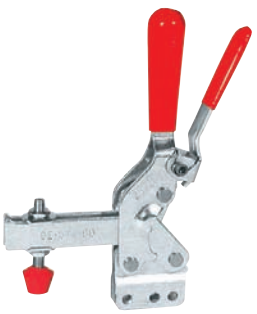

Model no.	A	A1	A2	A3	B2	C	C1	C2	øD	F	H	L	L1	M
2002-UBR	0.50	1.36	0.90	0.24	0.24	1.27	0.49	0.12	0.22	0.25	5.07	4.17	1.93	M6
2007-UBR	0.75	1.93	1.25	0.33	0.24	1.68	1.24	0.16	0.28	0.34	7.64	5.94	2.88	M8
2010-UBR	–	2.53	1.25	0.63	0.31	2.20	1.12	0.20	0.34	0.44	9.61	7.28	3.56	M10

NEW

Models 2002-UR, 2007-UR, 2010-UR

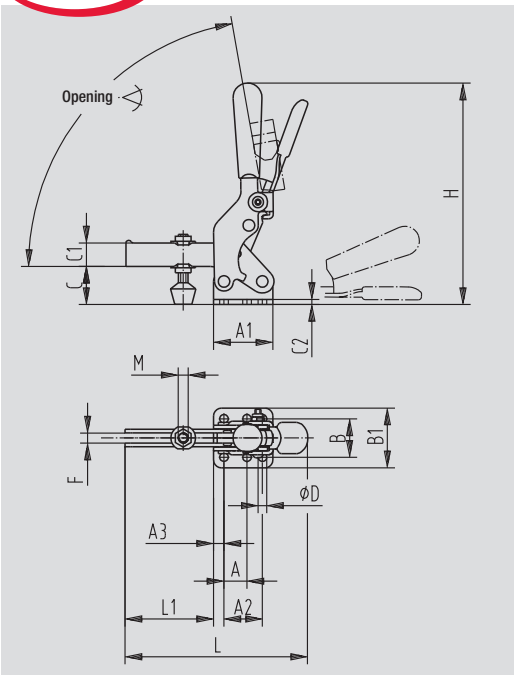

Model no.	Holding Capacity [lbs.]	Bar Opening +10°	Handle Moves	[lbs.]	Standard equipment	Flanged Washers
2002-UR	600	75°	85°	0.48	215208-M	215105
2002-UR-LS					without spindle	215105
2007-UR	1,000	80°	76°	1.20	2007208-M	507107
2007-UR-LS					without spindle	507107
2010-UR	1,400	80°	83°	2.56	240208-M	235106
2037-UR-LS					without spindle	235106

See additional adjustment spindles beginning on page 9.1 forward

DE-STA-CO® Toggle Lock Plus
U-bar
Flanged base

Patent No. 6,595,507

Model no.	A	A1	A2	A3	B	B1	C	C1	C2	øD	F	H	L	L1	M
2002-UR	0.50	1.36	0.90	0.24	1.06	1.52	0.95	0.49	0.12	0.22	0.25	4.73	4.17	1.93	M6
2007-UR	0.75	1.93	1.25	0.33	1.25	1.94	1.25	1.24	0.16	0.28	0.34	7.21	5.94	2.88	M8
2010-UR	-	2.53	1.25	0.63	1.78	2.62	1.70	1.12	0.20	0.34	0.44	9.00	7.28	3.56	M10

Standard vertical clamps – flanged or straight base, solid bar

Solid clamp bar
Base flanged or straight

Application areas

Ideal for all sectors in which work is performed with holding capacities of up to 1,200 lbs. The heavy-duty clamping bar is highly suitable for adaptation to fixtures where it can be individually cut in lengths at a specific angle.

Applications include assembling, drilling, testing, gluing and other processing operations. Suitable for use in welding fixtures and gauge manufacturing, as well as in all sectors of the woodworking industry.

Product features

Torsion-protected, hardened bushings
Rivets made of stainless steel
Zinc plated
Oil-resistant, ergonomically shaped DE-STA-CO handle grip
Intermediate safety link

Accessories

Vertical clamps with solid bars are delivered with bolt retainers that can be welded to the clamping bar.

Models 202, 207-L, 207-S, 210-S, 247-S, 267-S

Model no.	Holding Capacity [lbs.]	Bar Opening +10°	Handle Moves	[lbs.]	Standard equipment	Bolt Retainer
202	200	104°	64°	0.33	202208-M	–
207-L	500	115°	62°	0.74	without spindle	207105
207-S	500	115°	62°	0.69	without spindle	207105
210-S	750	106°	58°	1.29	without spindle	210114
247-S	1,000	136°	75°	2.39	without spindle	247110
267-S	1,200	140°	70°	4.36	without spindle	110122

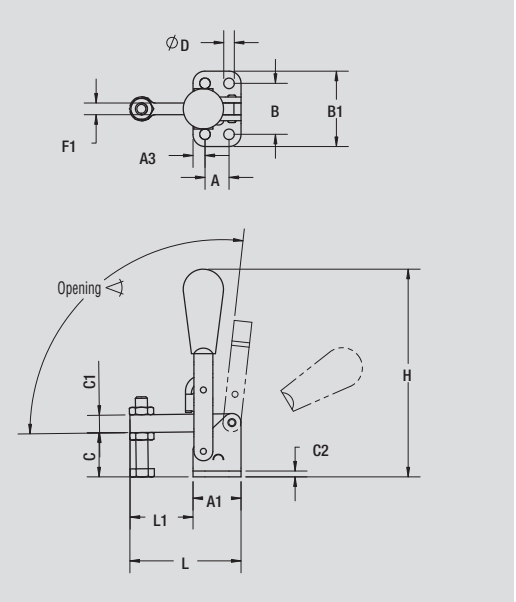

ALSO AVAILABLE		
As Air Hydraulic	Model 807-S Model 810-S Model 847-S	Page 11.8 Page 11.8 Page 11.8
As DE-STA-CO® Toggle Lock Plus	Model 207-LR Model 210-SR	Page 2.22 Page 2.22
See accessories beginning on page 9.1.		
See section 16 for holding capacity charts.		

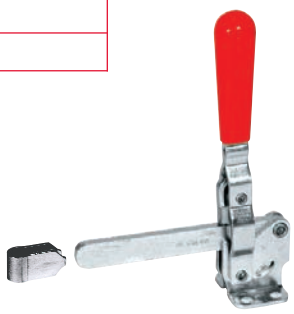

Model no.	A	A1	A3	A6	B	B1	C	C1	C2	øD	øD1	F1	H	L	L1	Spindle Size
202	0.50	1.00	0.25	–	1.06	1.56	0.94	0.37	0.12	0.22	0.39	0.24	4.21	2.31	1.31	M6 or 1/4
207-L	0.75	1.38	0.31	0.15	1.25	1.75	1.25	0.63	0.12	0.28	0.32	0.24	6.89	5.02	3.45	M8 or 5/16
207-S	0.75	1.38	0.31	0.15	1.25	1.75	1.25	0.63	0.12	0.28	0.32	0.24	6.89	3.75	2.19	M8 or 5/16
210-S	1.25	1.91	0.31	0.42	1.78	2.53	1.67	0.79	0.12	0.33	0.53	0.31	8.15	5.53	3.63	M12 or 1/2
247-S	1.25	2.00	0.37	0.47	1.78	2.53	2.00	0.87	0.19	0.34	0.57	0.38	8.69	6.87	4.87	M12 or 1/2
267-S	2.00	3.00	0.49	–	2.75	3.75	3.08	1.26	0.19	0.48	0.65	0.37	11.88	8.88	5.88	M14 or 5/8

Models 202-B, 207-LB, 207-SB, 210-SB, 247-SB

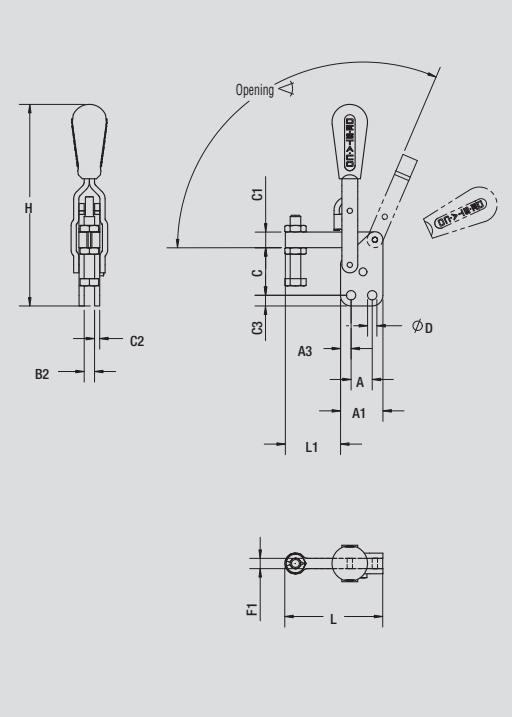

Model no.	Holding Capacity [lbs.]	Bar Opening +10°	Handle Moves	[lbs.]	Standard equipment	Bolt Retainer
202-B	200	104°	64°	0.33	202208-M	–
207-LB	500	115°	62°	0.74	without spindle	207105
207-SB	500	115°	62°	0.69	without spindle	207105
210-SB	750	106°	58°	1.29	without spindle	210114
247-SB	1,000	136°	75°	2.39	without spindle	247110

ALSO AVAILABLE		
As Stainless Steel	Model 202-BSS	Page 8.4
As DE-STA-CO® Toggle Lock Plus	Model 207-LBR Model 210-SBR	Page 2.23 Page 2.23
See accessories beginning on page 9.1.		
See section 16 for holding capacity charts.		

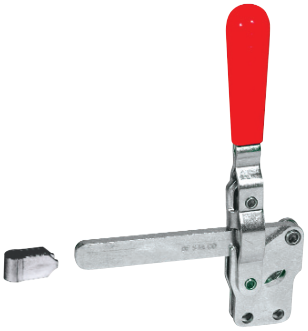

Model no.	A	A1	A3	A6	B2	C	C1	C2	C3	øD	øD1	F1	H	L	L1	Spindle Size
202-B	0.50	1.00	0.25	–	0.25	1.13	0.37	0.12	0.24	0.22	0.39	0.24	4.40	2.31	1.31	M6 or 1/4
207-LB	0.75	1.38	0.31	0.15	0.25	1.55	0.63	0.12	0.25	0.28	0.32	0.24	7.48	5.02	3.45	M8 or 5/16
207-SB	0.75	1.38	0.31	0.15	0.25	1.55	0.63	0.12	0.25	0.28	0.32	0.24	7.48	3.75	2.19	M8 or 5/16
210-SB	1.25	1.91	0.31	0.47	0.31	2.19	0.79	0.12	0.39	0.33	0.53	0.31	8.16	5.53	3.63	M12 or 1/2
247-SB	1.25	2.00	0.37	–	0.38	2.25	0.87	0.19	0.37	0.34	0.57	0.38	8.94	6.87	4.87	M12 or 1/2

Available upon request, as are a number of other modifications

Vertical clamps with DE-STA-CO® Toggle Lock Plus

Solid clamp bar
Base flanged or straight

Application areas

The additional release lever holds the clamp in the opened and closed position. Unintentional opening and closing of the clamp is therefore impossible.

This clamp is preferred for more difficult clamping conditions, e.g. vibrating conditions, transporting of sensitive parts and where the clamp arm is set at an angle to the base.

Product features

Additional locking device for secure clamping
Torsion-protected, hardened bushings
Rivets made of stainless steel
Zinc plated
Oil-resistant, ergonomically shaped DE-STA-CO handle grip
Intermediate safety link

Accessories

Vertical clamps with solid clamp bars are only delivered with bolt retainers that can be welded to the clamping bar.

Safety instructions

To guarantee secure locking, the clamp must be adjusted to lock in the over-center position.

Models 207-LR, 210-SR

Model no.	Holding Capacity [lbs.]	Bar Opening +10°	Handle Moves	[lbs.]	Standard equipment	Bolt Retainer
207-LR	500	100°	62°	1.00	without spindle	207105
210-SR	750	103°	58°	1.60	without spindle	210114
See additional adjustment spindles beginning on page 9.1.						
See section 16 for holding capacity charts.						

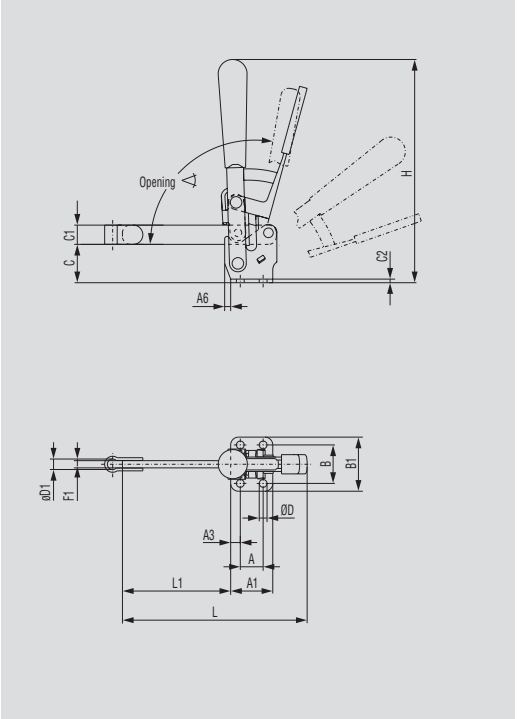

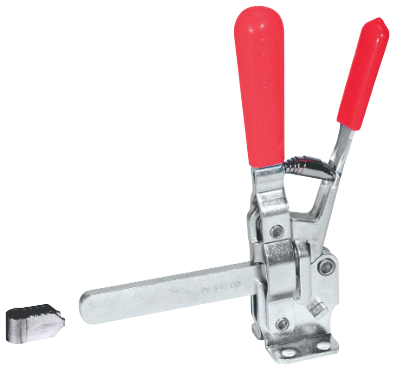

Model no.	A	A1	A3	A6	B	B1	C	C1	C2	øD	øD1	F1	H	L	L1	Spindle Size		
207-LR	0.75	1.38	0.31	0.15	1.25	1.70	1.25	0.63	0.12	0.28	0.32	0.24	6.90	4.58	3.45	M8 or 5/16		
210-SR	1.25	1.89	0.31	0.42	1.75	2.50	1.68	0.79	0.12	0.33	0.53	0.31	8.15	6.61	3.56	M12 or 1/2		

Models 207-LBR, 210-SBR

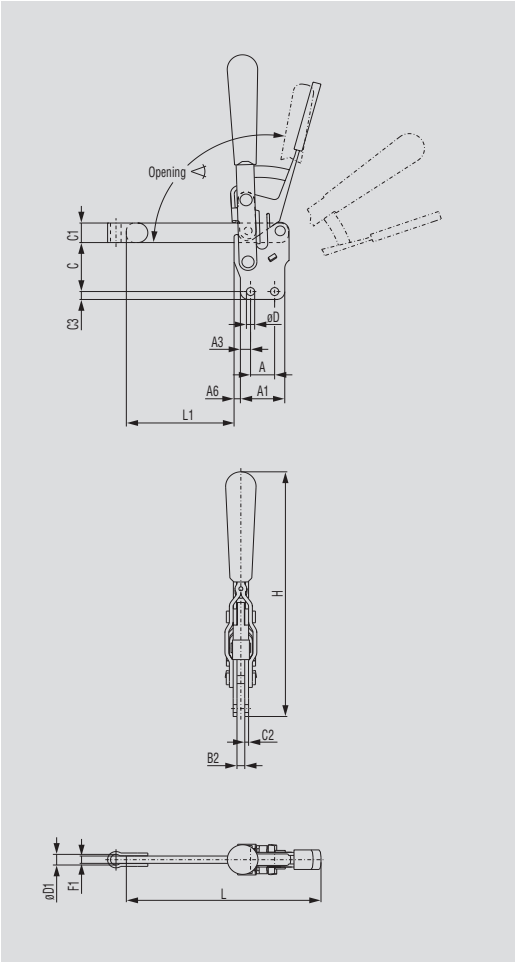

Model no.	Holding Capacity [lbs.]	Bar Opening +10º	Handle Moves	[lbs.]	Standard equipment	Bolt Retainer
207-LBR	500	100°	62º	1.00	without spindle	207105
210-SBR	750	103°	58º	1.60	without spindle	210114

See additional adjustment spindles beginning on page 9.1

See section 16 for holding capacity charts.

Model no.	A	A1	A3	A6	B2	C	C1	C2	C3	øD	øD1	F1	H	L	L1	Spindle Size		
207-LBR	0.75	1.38	0.31	0.15	0.24	1.56	0.63	0.12	0.25	0.28	0.32	0.24	7.44	4.58	3.45	M8 or 5/16		
210-SBR	1.25	1.89	0.31	0.42	0.31	2.20	0.79	0.12	0.39	0.33	0.53	0.31	9.04	6.61	3.56	M12 or 1/2		

Available upon request, as are a number of other modifications

Models 202-T, 207-TS, 210-TS

Model no.	Holding Capacity [lbs.]	Bar Opening +10°	Handle Moves	[lbs.]	Standard equipment	Bolt Retainer
202-T	200	104°	64°	0.36	202208-M	–
207-TS	500	115°	62°	0.74	without spindle	207105
210-TS	750	106°	58°	1.36	without spindle	235106

See additional adjustment spindles beginning on page 9.1

Solid clamping bar
T-handle has shorter profile and can be operated from right or left hand side
Flanged base

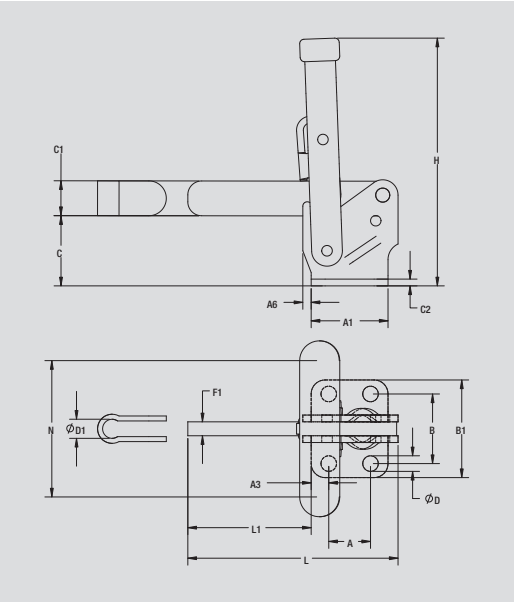

Model no.	A	A1	A3	A6	B	B1	C	C1	C2	øD	F	H	L	L1	L2	L3	N		Spindle Size
202-T	0.50	1.00	0.26	–	1.06	1.56	0.94	0.38	0.12	0.22	0.25	2.81	2.73	1.73	0.51	0.98	3.56		M6 or 1/4
207-TS	0.75	1.38	0.31	0.15	1.25	1.75	1.25	0.63	0.11	0.28	0.33	4.36	3.75	2.15	0.50	1.30	3.00		M8 or 5/16
210-TS	1.25	1.91	0.31	0.42	1.78	2.53	1.67	0.79	0.11	0.33	0.40	5.38	5.53	3.63	0.94	2.40	6.02		M12 or 1/2

Available upon request

Model 202-TB

Model no.	Holding Capacity [lbs.]	Bar Opening +10°	Handle Moves	[lbs.]	Standard equipment	Bolt Retainer
202-TB	200	104°	64°	0.36	202208-M	215105

See additional adjustment spindles beginning on page 9.1

See section 16 for holding capacity charts.

Solid clamping bar
T-handle
Straight base

Model 202-TB

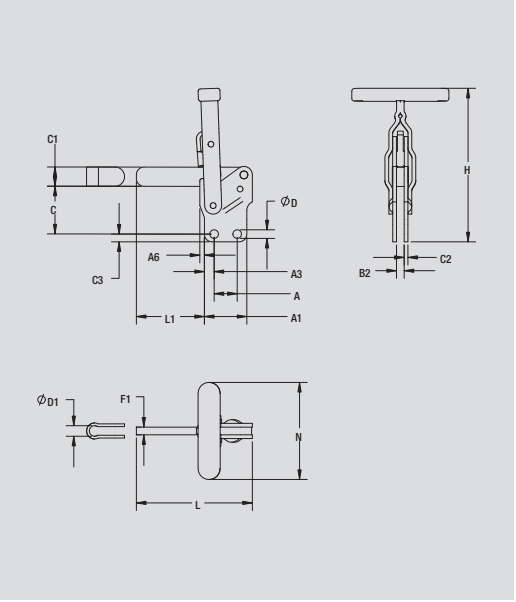

Model no.	A	A1	A3	A6	B2	C	C1	C2	C3	øD	F	H	L	L1	L2	L3	Spindle Size	N		
202-TB	0.50	1.00	0.26	–	0.25	1.13	0.38	0.12	0.12	0.22	0.25	3.00	2.73	1.73	0.51	0.98	M6 or 1/4	3.56		

Available upon request

Models 201-TU, 202-TU, 207-TU, 207-TUL, 210-TU

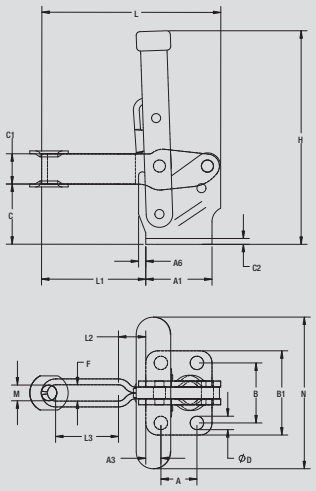

Model no.	Holding Capacity [lbs.]	Bar Opening +10º	Handle Moves	[lbs.]	Standard equipment	Flanged Washers
201-TU	100	110°	60°	0.17	305208-M	102111
202-TU	200	104°	64°	0.38	202208-M	215105
207-TU	375	115°	62°	0.72	without spindle	507107
207-TUL	375	115°	62°	0.72	without spindle	501107
210-TU	600	106°	58°	1.36	without spindle	235106

See additional adjustment spindles beginning on page 9.1

See section 16 for holding capacity charts.

U-bar
T-handle
Flanged base

Model no.	A	A1	A3	A6	B	B1	C	C1	C2	øD	F	H	L	L1	L2	L3	M	N
201-TU	0.63	1.00	0.19	–	0.94	1.31	0.63	0.31	0.08	0.17	0.21	2.25	2.02	1.02	0.13	0.73	M5 or 10-32	1.92
202-TU	0.50	1.00	0.26	–	1.06	1.56	0.94	0.38	0.12	0.22	0.25	2.81	2.73	1.73	0.51	0.98	M6 or 1/4	3.56
207-TU	0.75	1.38	0.31	0.15	1.25	1.75	1.25	0.63	0.11	0.28	0.33	4.36	3.75	2.15	0.50	1.30	M8 or 5/16	3.00
207-TUL	0.75	1.38	0.31	0.15	1.25	1.75	1.25	0.63	0.11	0.28	0.33	4.36	5.41	3.85	0.50	2.75	M8 or 5/16	3.00
210-TU	1.25	1.91	0.31	0.42	1.78	2.53	1.67	0.79	0.11	0.33	0.40	5.38	5.53	3.63	0.94	2.40	M10 or 3/8	6.02

Standard vertical clamps

U-shaped clamping bar
Flanged base

Application areas

Ideal for all areas in which work is performed with holding capacities of up to 1,200 lbs. For example, assembling, drilling, testing, gluing and other processing operations. Suitable for use in welding fixtures and in checking fixtures, as well as in all sectors of the woodworking industry.

Product features

Torsion-protected, hardened bushings in models with a holding capacity greater than 375 lbs.
Rivets made of stainless steel
Zinc plated
Oil-resistant, ergonomically shaped DE-STA-CO handle grip
Intermediate safety link

Accessories

Vertical clamps with a U-shaped clamping bar can be ordered in two varieties:

Standard model number: The matching standard adjustment spindle is included.

Model number contains the addition "-LS": The model is delivered with two flange washers without an adjustment spindle.

Models 201-U, 202-U, 202-UL, 207-U, 207-UL, 207-UO, 210-U, 247-U, 267-U

Model no.	Holding Capacity [lbs.]	Bar Opening +10°	Handle Moves	[lbs.]	Standard equipment	Flanged Washers
201-U	100	110°	60°	0.15	305208-M	102111
201-U-LS					without spindle	102111
202-U	200	104°	64°	0.35	202208-M	215105
202-U-LS					without spindle	215105
202-UL	200	104°	64°	0.36	202208-M	215105
207-U	375	100°	62°	0.67	225208-M	507107
207-U-LS					without spindle	507107
207-UL	375	100°	62°	0.67	225208-M	507107
207-UO	375	100°	62°	0.67	without spindle	507107
210-U	600	106°	58°	1.29	240208-M	235106
210-U-LS					without spindle	235106
247-U	1,000	136°	75°	2.36	247208-M	247109
247-U-LS					without spindle	247109
267-U	1,200	140°	70°	4.80	267203-M	267102
267-U-LS					without spindle	267102

ALSO AVAILABLE		
As Air Hydraulic	Model 807-U Model 810-U Model 812-U Model 847-U	Page 11.7 Page 11.7 Page 11.7 Page 11.7
As Stainless Steel	Model 201-USS Model 202-USS Model 207-USS Model 210-USS	Page 8.3 Page 8.3 Page 8.3 Page 8.3
As DE-STA-CO® Toggle Lock Plus	Model 207-UR Model 210-UR	Page 2.30 Page 2.30
See accessories beginning on page 9.1.		
See section 16 for holding capacity charts.		

Models 201-U, 202-U, 202-UL, 207-U, 207-UL, 207-UO, 210-U, 247-U, 267-U

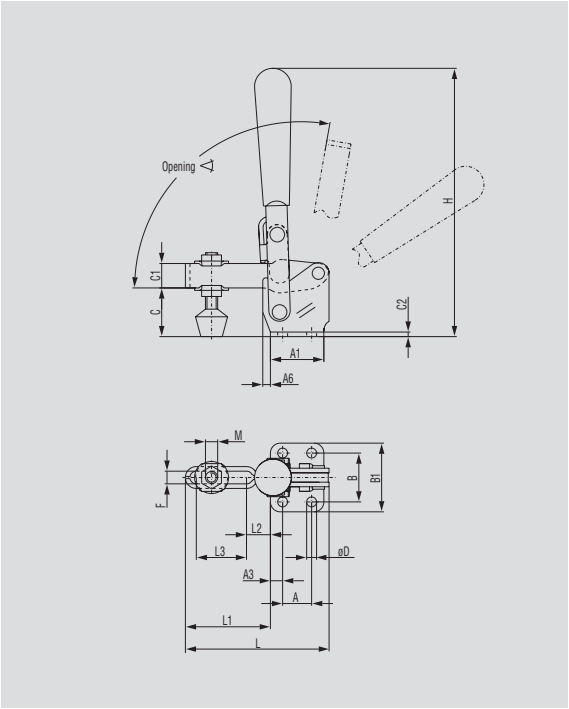

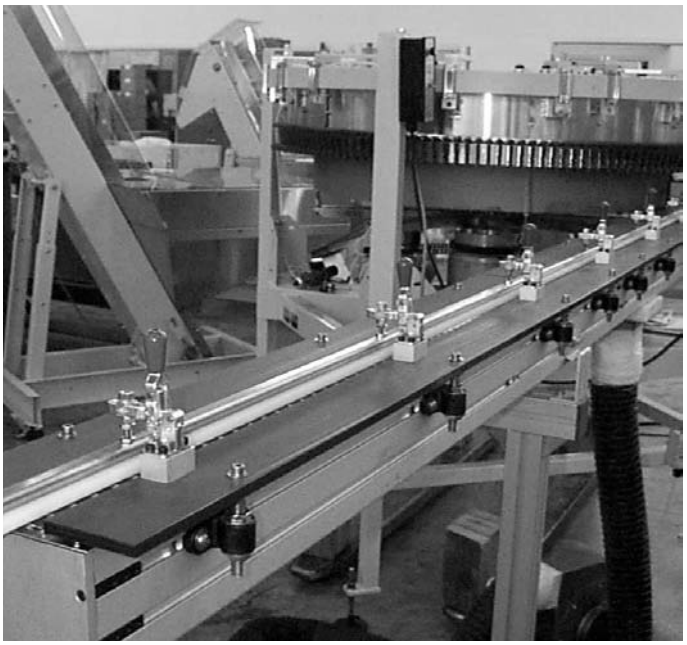

Several Model 201-U clamps, with hex-head spindles, are used to secure a guide in a bottle capping application.

Model no.	A	A1	A3	A6	B	B1	C	C1	C2	øD	F	H	L	L1	L2	L3	M
201-U	0.63	1.00	0.19	–	0.94	1.31	0.63	0.31	0.08	0.17	0.21	3.03	2.02	1.02	0.13	0.73	M5 or 10-32
202-U	0.50	1.00	0.26	–	1.06	1.56	0.94	0.38	0.12	0.22	0.25	4.21	2.73	1.73	0.51	0.98	M6 or 1/4
202-UL	0.50	1.00	0.26	–	1.06	1.56	0.94	0.38	0.12	0.22	0.25	4.21	3.27	2.27	0.51	1.54	M6 or 1/4
207-U	0.75	1.38	0.31	0.15	1.25	1.75	1.25	0.63	0.11	0.28	0.33	6.89	3.68	2.15	0.50	1.30	M8 or 5/16
207-UL	0.75	1.38	0.31	0.15	1.25	1.75	1.25	0.63	0.11	0.28	0.33	6.89	5.41	3.85	0.50	2.75	M8 or 5/16
207-UO	0.75	1.38	0.31	0.15	1.25	1.75	1.25	0.63	0.11	0.28	0.33	5.63	3.75	2.15	0.50	1.30	M8 or 5/16
210-U	1.25	1.91	0.31	0.42	1.78	2.53	1.67	0.79	0.11	0.33	0.40	8.15	5.54	3.63	0.94	2.40	M10 or 3/8
247-U	1.25	2.00	0.37	0.47	1.78	2.53	2.00	0.83	0.19	0.34	0.53	8.69	6.87	4.87	1.36	3.06	M12 or 1/2
267-U	2.00	3.00	0.49	–	2.75	3.75	3.08	1.26	0.19	0.48	0.65	11.88	8.92	5.92	1.44	4.00	M16 or 5/8

Standard vertical clamps

U-shaped clamping bar
Straight base

Application areas

Ideal for all sectors in which work is performed with holding capacities of up to 1,200 lbs., including assembling, drilling, testing, gluing and other processing operations. Suitable for use in welding fixtures and in checking fixtures, as well as in all sectors of the woodworking industry.

Product features

Torsion-protected, hardened bushings in models with a holding force greater than 375 lbs.
Rivets made of stainless steel
Zinc plated
Oil-resistant, ergonomically shaped DE-STA-CO handle grip
Intermediate safety link

Accessories

Vertical clamps with a U-shaped clamping bar can be ordered in two varieties:

Standard model number: The matching standard adjustment spindle is included.
Model number contains the addition "-LS": The model is delivered with two flange washers without an adjustment spindle.

Models 201-UB, 202-UB, 207-UB, 207-ULB, 210-UB, 247-UB

Model no.	Holding Capacity [lbs.]	Bar Opening +10°	Handle Moves	[lbs.]	Standard equipment	Flanged Washers
201-UB	100	110°	60°	0.15	305208-M	102111
201-UB-LS					without spindle	102111
202-UB	200	104°	64°	0.35	202208-M	215105
202-UB-LS					without spindle	215105
207-UB	375	100°	62°	0.67	225208-M	507107
207-UB-LS					without spindle	507107
207-ULB	375	100°	62°	0.67	240208-M	507107
210-UB	600	106°	58°	1.29	247208-M	235106
210-UB-LS					without spindle	235106
247-UB	1,000	136°	75°	2.36	247208-M	247109
247-UB-LS					without spindle	247109

ALSO AVAILABLE		
As Stainless Steel	Model 202-UBSS	Page 8.5
As DE-STA-CO® Toggle Lock Plus	Model 207-UBR Model 210-UBR	Page 2.31 Page 2.31
See accessories beginning on page 9.1.		
See section 16 for holding capacity charts.		

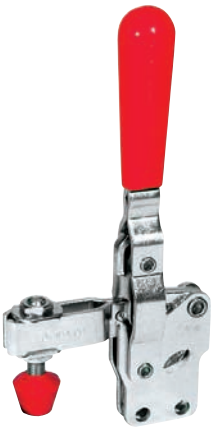

Models 201-UB, 202-UB, 207-UB, 207-ULB, 210-UB, 247-UB

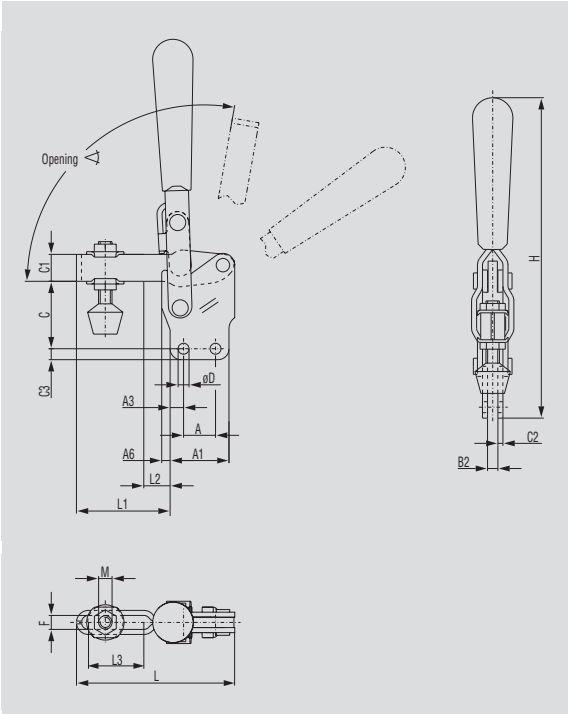

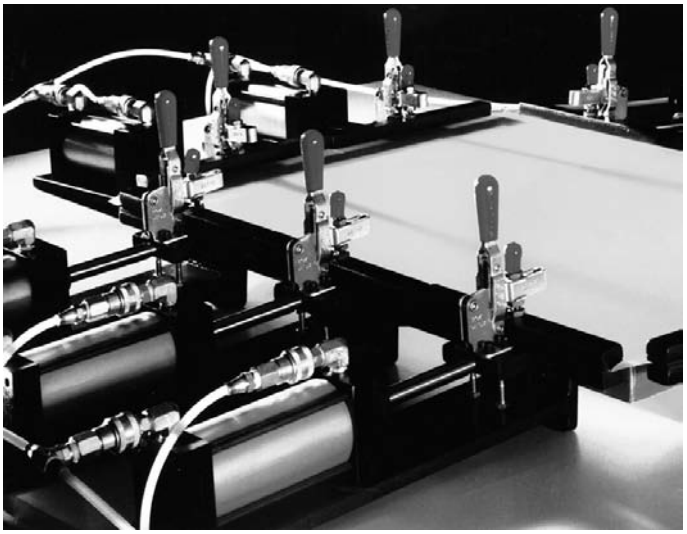

Model 207-UO hold-down clamps used in fixturing material in a silk screening application.

Model no.	A	A1	A3	A6	B2	C	C1	C2	C3	øD	F	H	L	L1	L2	L3	M
201-UB	0.63	1.00	0.19	–	0.16	0.88	0.31	0.08	0.08	0.17	0.21	3.13	2.02	1.02	0.13	0.73	M5
202-UB	0.50	1.00	0.26	–	0.24	1.13	0.38	0.12	0.12	0.22	0.25	4.40	2.73	1.73	0.51	0.98	M6
207-UB	0.75	1.38	0.31	0.15	0.25	1.55	0.63	0.11	0.11	0.28	0.33	7.48	3.68	2.15	0.50	1.30	M8
207-ULB	0.75	1.38	0.31	0.15	0.25	1.55	0.63	0.11	0.11	0.28	0.33	7.48	5.41	3.85	0.50	2.75	M8
210-UB	1.25	1.91	0.31	0.42	0.31	2.19	0.79	0.11	0.11	0.33	0.40	8.16	5.54	3.63	0.94	2.40	M10
247-UB	1.25	2.00	0.37	0.47	0.38	2.25	0.83	0.19	0.19	0.34	0.53	8.94	6.87	4.87	1.36	3.06	M12

Available upon request

Vertical clamps with DE-STA-CO® Toggle Lock Plus

U-shaped clamping bar
Flanged or straight base

Application areas

The additional release lever holds the clamp in the opened and closed position. Unintentional opening and closing of the clamp is therefore impossible.

This clamp is preferred for more difficult clamping conditions, e.g. vibrating conditions, transporting of sensitive parts and where the clamp bar is set at an angle to the base.

Product features

Additional locking device for secure clamping
Torsion-protected, hardened bushings
Rivets made of stainless steel
Zinc plated
Oil-resistant, ergonomically shaped DE-STA-CO handle grip
Intermediate safety link

Accessories

Vertical clamps with a U-shaped clamping bar can be ordered in two varieties:

Standard model number: The matching standard adjustment spindle is included.

Model number contains the addition "-LS": The model is delivered with two flange washers without an adjustment spindle.

Safety instructions

To guarantee secure locking, the clamp must be adjusted to lock in the over-center position.

Models 207-UR, 210-UR

Model no.	Holding Capacity [lbs.]	Bar Opening +10°	Handle Moves	[lbs.]	Standard equipment	Flanged Washers
207-UR	375	100°	62°	1.00	225208-M	507107
207-UR-LS					without spindle	507107
210-UR	600	100°	58°	1.60	240208-M	235106
210-UR-LS					without spindle	235106
See additional adjustment spindles beginning on page 9.1						
See section 16 for holding capacity charts.						

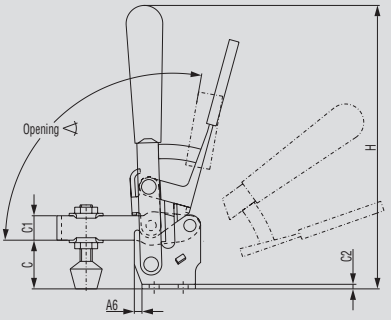

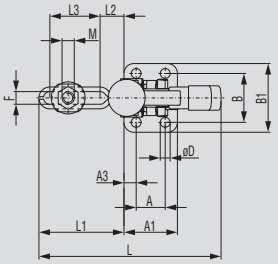

Model no.	A	A1	A3	A6	B	B1	C	C1	C2	øD	F	H	L	L1	L2	L3	M
207-UR	0.75	1.38	0.31	0.15	1.25	1.70	1.25	0.63	0.12	0.28	0.33	6.90	4.58	2.09	0.50	1.30	M8 or 5/16
210-UR	1.25	1.89	0.31	0.42	1.75	2.50	1.68	0.79	0.12	0.33	0.25	8.15	6.72	3.66	0.94	2.41	M10 or 3/8

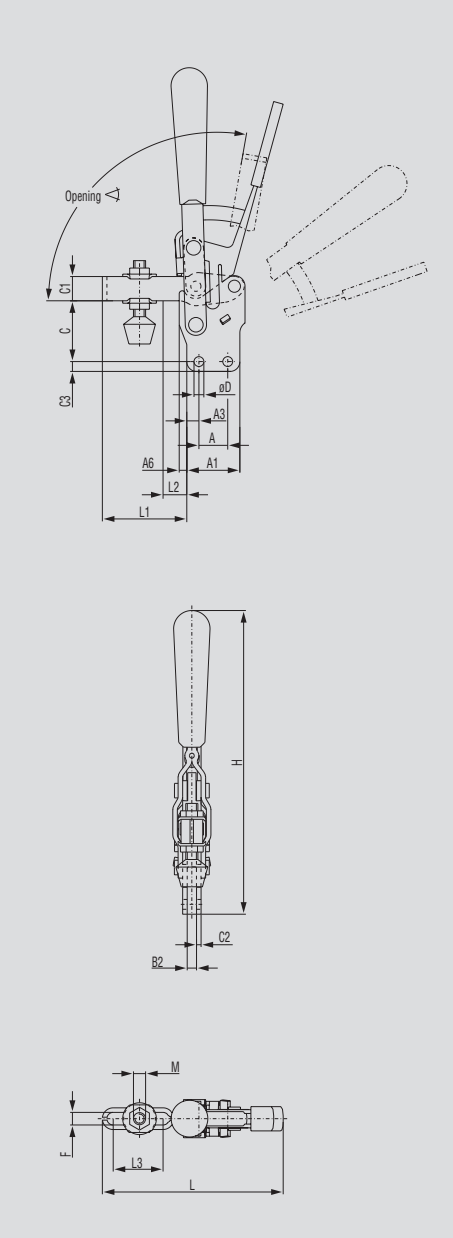

Model no.	Holding Capacity [lbs.]	Bar Opening +10°	Handle Moves	[lbs.]	Standard equipment	Flanged Washers
207-UBR	375	100°	62°	1.00	225208-M	507107
207-UBR-LS					without spindle	507107
210-UBR	600	103°	58°	1.60	240208-M	235106
210-UBR-LS					without spindle	235106

See additional adjustment spindles beginning on page 9.1

See section 16 for holding capacity charts.

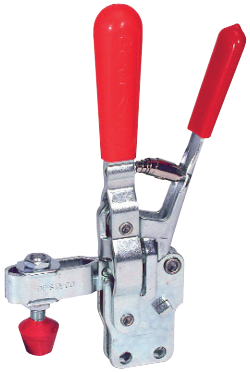

Model no.	A	A1	A3	A6	B2	C	C1	C2	C3	øD	F	H	L	L1	L2	L3	M
207-UBR	0.75	1.38	0.31	0.15	0.24	1.56	0.63	0.12	0.25	0.28	0.33	7.44	4.58	2.09	0.50	1.30	M8 or 5/16
210-UBR	1.25	1.89	0.31	0.42	0.31	2.20	0.79	0.12	0.39	0.33	0.25	9.04	6.72	3.66	0.94	2.41	M10 or 3/8

Available upon request

Models 219, 229

Applications areas

Featuring a unique cam action, these clamps will hold workpieces of inconsistent height. Ideal for castings or forgings, these models – once set for the nominal or average piece height – allow for a deviation larger or smaller than average.

Model 219 has an overall clamping range of 13/64", while Model 229 has an overall clamping range of 5/16" and accommodates any 1/2", M10, or M12 spindle,

Product features

Torsion-protected, hardened bushings in models with a holding force greater than 375 lbs.
Rivets made of stainless steel
Zinc plated
Oil-resistant, ergonomically shaped DE-STA-CO handle grip

Model no.	Holding Capacity [lbs.]	Bar Opening +10°	Handle Moves	[lbs.]	Standard equipment	Flanged Washers
219	350	115°	180°	1.75	210203	235106
229	1,000	115°	180°	2.59	229203	247109
See additional adjustment spindles beginning page 9.1						
See section 16 for holding capacity charts.						

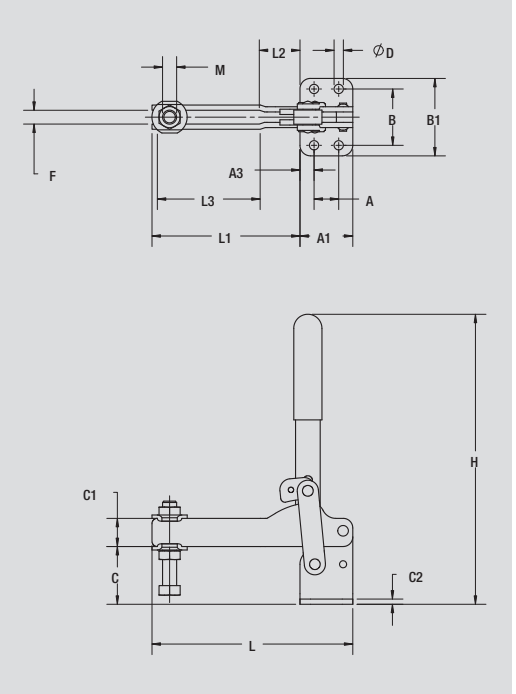

Model no.	A	A1	A3	B	B1	C	C1	C2	øD	F	H	L	L1	L2	L3		M
219	0.75	1.50	0.38	1.50	2.26	1.56	0.75	0.12	0.28	0.46	7.50	5.75	4.25	1.25	3.00		M8 or 5/16
229	0.88	1.88	0.50	2.00	2.75	2.05	1.00	0.19	0.33	0.49	9.94	7.14	5.26	1.45	3.81		M12 or 1/2
Available upon request																	

Solid clamping bar
Flanged base
Straight base

Applications areas

This series of models is extremely robust. Heavy-duty clamping tasks are easily fulfilled and rough handling is not a problem for this series. The heavy-duty vertical clamps are therefore especially suitable for welding and milling applications, for locking foam molds and similar sever clamping applications. The heavy-duty clamping bar can be shortened, welded to or have holes drilled to suit the application.

Product features

Hardened, polished bushings
Parts drop forged
Oil-resistant, ergonomically shaped DE-STA-CO handle grip

Models 516, 516-B

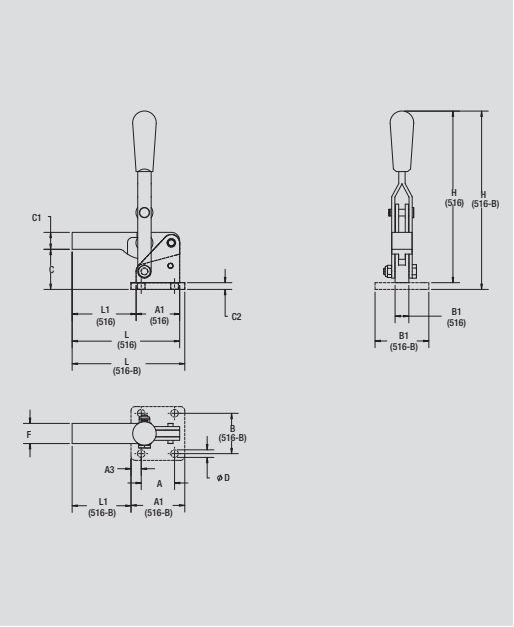

Model no.	Holding Capacity [lbs.]	Bar Opening +10°	Handle Moves	[lbs.]	Standard equipment
516	750	122°	66°	1.25	none
516-B	750	122°	66°	1.69	none

ALSO AVAILABLE		
As Air Hydrauic	Model 846	Page 11.1
See section 16 for holding capacity charts.		

Model no.	A	A1	A3	B	B1	C	C1	C2	øD	F	H	L	L1				
516	–	1.62	–	–	0.51	1.24	0.63	–	–	0.75	6.38	4.00	2.38				
516-B	1.24	2.00	0.38	1.50	2.00	1.49	0.63	0.25	0.28	0.75	6.38	4.19	2.19				

Model 518

Applications areas

This model features a forged hold-down bar and improved ergonomic grip with handle stop built in. The forged hold-down bar can be cut or welded to suit the user's fixture. One of the major features of this clamp is the greater clearance under the bar. Due to the bar design, there is twice the normal clearance in this size clamp.

Model no.	Holding Capacity [lbs.]	Bar Opening +10°	Handle Moves	[lbs.]	Standard equipment
518	500	90°	75°	0.82	none
See section 16 for holding capacity charts.					

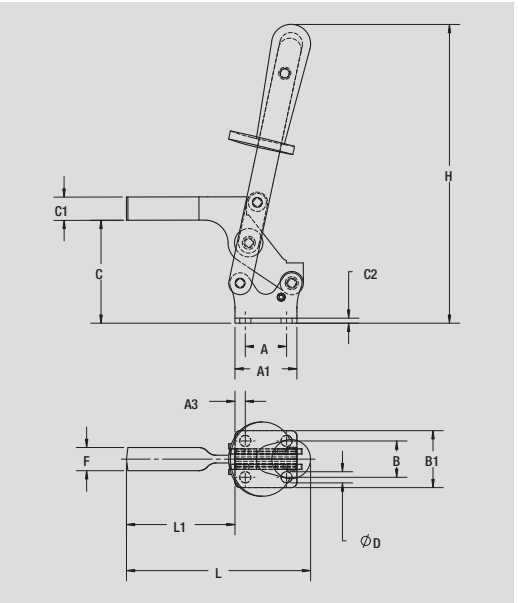

Model no.	A	A1	A3	B	B1	C	C1	C2	øD	F	H	L	L1				
518	1.00	1.50	0.25	0.88	1.38	2.49	0.56	0.12	0.27	0.56	7.24	4.46	2.63				

Applications areas

For tough, heavy-duty workholding. Clamps have square cold-drawn steel hold-down bars. Pivot points have serrated, hardened bushings. Models 527 and 528 are supplied with flanged base. Also available with front mounting base as Model 527-F. Models 528 and 528-F are vertical handle variations of Models 527 and 527-F. All models provided with red handle grip. Hold-down bars can be machined to meet the application requirements.

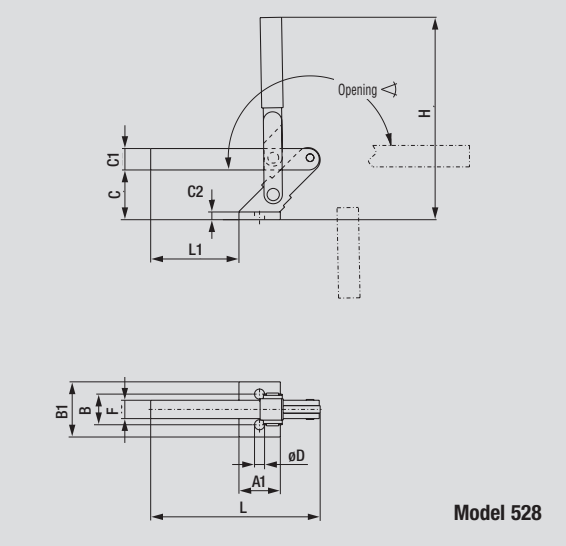

Model 528

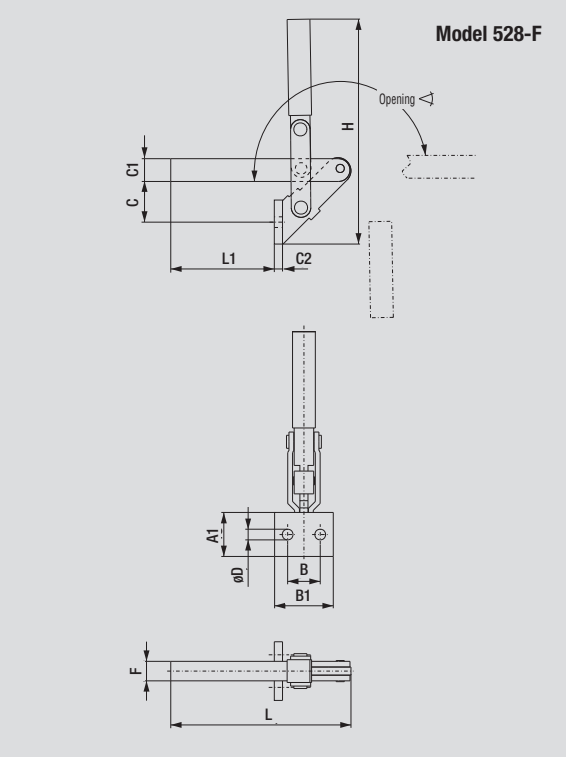

Model 528-F

Model no.	Holding Capacity [lbs.]	Bar Opening +10°	Handle Moves	[lbs.]	Standard equipment
528	1,000	195°	65°	2.50	None
528-F	1,000	195°	65°	2.50	None

See section 16 for holding capacity charts.

Model 528

Model 528-F

Model no.	A1	B	B1	C	C1	C2	øD	F	H	L	L1
528	1.50	1.25	2.25	2.09	0.88	0.21	0.41	0.75	8.13	6.88	3.63
528-F	1.50	1.25	2.25	1.84	0.88	0.21	0.41	0.75	7.38	6.88	4.00

Models 548, 578, 588

Model no.	Holding Capacity [lbs.]	Bar Opening +10°	Handle Moves	[lbs.]	Standard equipment
548	2,500	199°	129°	5.30	None
578	4,000	199°	129°	9.12	None
588	6,000	199°	129°	14.75	None

See section 16 for holding capacity charts.

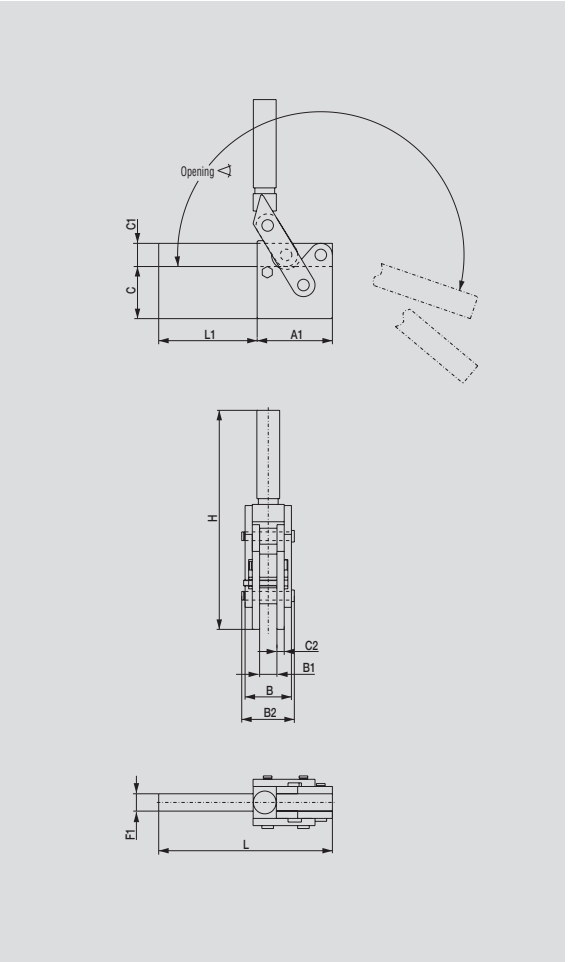

Model no.	A1	B	B1	B2	C	C1	C2	F1	H	L	L1
548	3.25	2.01	0.75	2.00	2.25	1.00	0.31	0.75	9.20	7.50	4.25
578	4.00	1.38	0.88	2.38	2.75	1.25	0.63	0.88	10.92	8.63	4.63
588	5.00	1.38	1.00	2.75	3.25	1.50	0.63	1.00	12.70	9.75	4.75

Applications areas

These clamps are designed for the most rugged production jobs. Handle and links are forged alloy steel, coined and machined to close tolerances. Have hardened pivot pins and serrated hardened bushings. Model 557 has a variable position straight base. Model 558 is a vertical handle variation of Model 557. All hold-down bars can be machined to meet your needs.

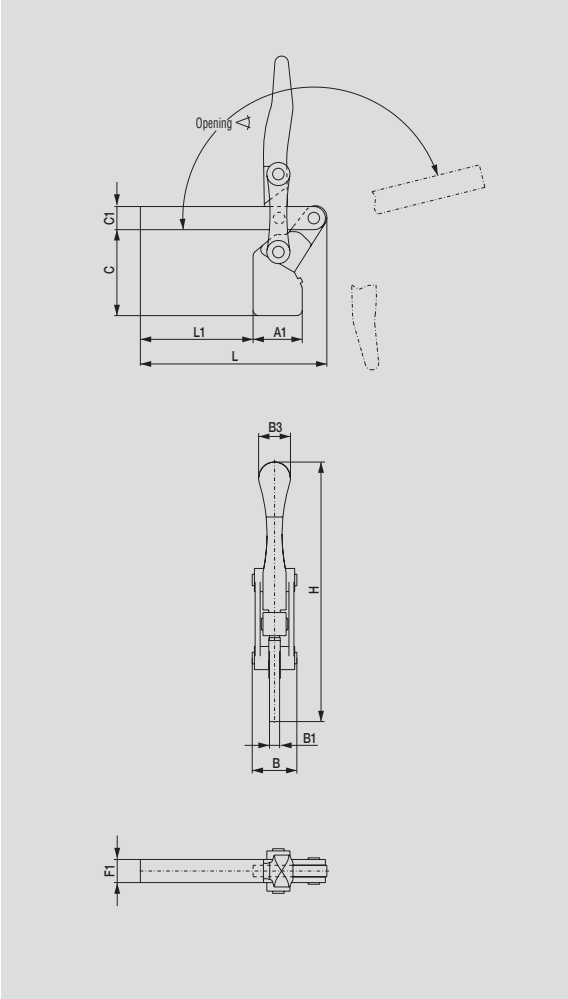

Model no.	Holding Capacity [lbs.]	Bar Opening +10º	Handle Moves	[lbs.]	Standard equipment
558	2,500	192°	64°	5.00	None
568	3,300	186°	64º	5.95	None

ALSO AVAILABLE		
As Air Hydraulic	Model 858	Page 11.13
See additional adjustment spindles beginning page 9.1.		
See section 16 for holding capacity charts.		

Model no.	A1	B	B1	B3	C	C1	F1	H	L	L1
558	2.13	1.93	0.44	1.38	3.75	1.00	1.00	11.25	8.00	4.81
568	2.13	1.93	0.44	1.38	3.35	1.38	0.98	11.25	8.00	4.81

Available upon request

Heavy-duty vertical clamps

Heavy-duty clamping bar
Flanged or straight bases with standard hole pattern

Application areas

This series of models is extremely robust. Heavy-duty clamping tasks are easily fulfilled and rough handling is not a problem for this series. The heavy-duty vertical clamps are especially suitable for welding and milling applications, for locking foam molds and similar severe clamping applications. The heavy-duty clamping bar can be shortened, welded to or have holes drilled to suit the application.

Product features

Hardened, polished bushings
Hardened, polished bolts
Parts drop-forged
Adjustable bar guide
Oil-resistant, ergonomically shaped DE-STA-CO handle grip

Models 533-L, 535-L

NEW

Model no.	Holding Capacity [lbs.]	Bar Opening +10°	[lbs.]	Bolt Retainer and Spacer
533-L	1,500	120°	2.20	533108-M
535-L	2,200	120°	4.08	535108-M
See additional adjustment spindles beginning page 9.1				

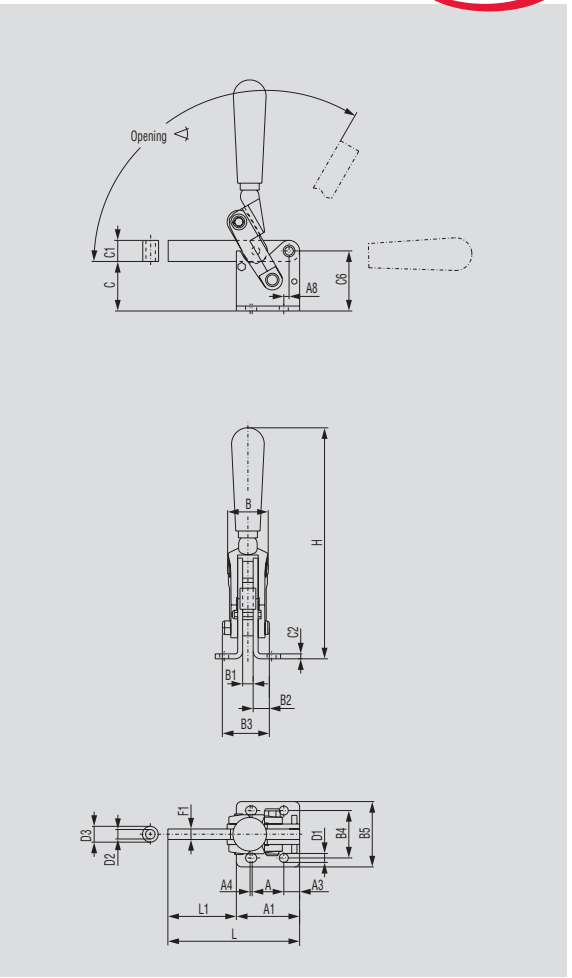

Model no.	A	A1	A3	A4	A8	B	B1	B2	B3
533-L	1.18	2.36	0.59	0.08	0.20	1.52	0.39	0.61	1.75
535-L	1.77	2.95	0.59	0.12	0.10	1.89	0.47	0.77	2.13

Model no.	B4	B5	C	C1	C2	C6	D1	D2	D3	F1	H	L	L1
533-L	1.77	2.44	1.85	0.79	0.19	2.24	0.33	0.35	0.59	0.39	8.62	4.92	2.56
535-L	2.05	2.87	2.64	0.98	0.19	3.13	0.41	0.43	0.79	0.47	10.3	6.30	3.35
Available upon request													

Models 533-LB, 535-LB, 536-LB

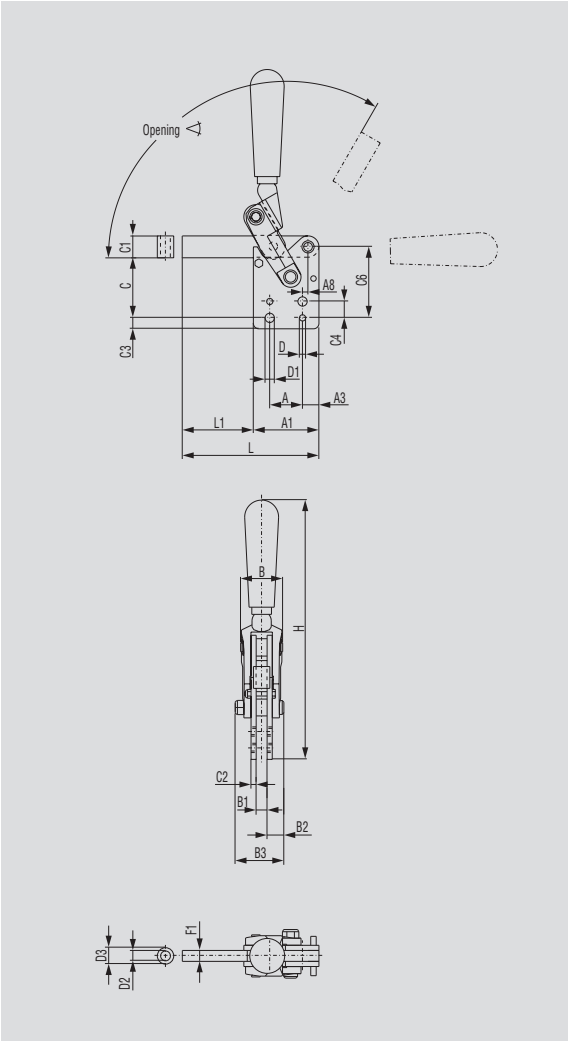

Model no.	Holding Capacity [lbs.]	Bar Opening +10°	[lbs.]	Bolt retainer and Spacer
533-LB	1,500	120°	2.20	533108-M
535-LB	2,200	120°	4.08	535108-M
536-LB	2,900	120°	7.72	536108-M

See additional adjustment spindles beginning page 9.1

Model no.	A	A1	A3	A8	B	B1	B2	B3	C
533-LB	1.18	2.36	0.59	0.20	1.52	0.39	0.61	1.75	2.17
535-LB	1.77	2.95	0.59	0.10	1.89	0.47	0.77	2.18	2.95
536-LB	2.17	3.74	0.79	0.20	2.36	0.63	0.91	2.62	3.74

Model no.	C1	C2	C3	C4	C6	D	D1	D2	D3	F1	H	L	L1
533-LB	0.79	0.19	0.39	0.59	2.56	0.22	0.33	0.35	0.59	0.39	9.33	4.92	2.56
535-LB	0.98	0.19	0.59	0.79	3.44	0.30	0.41	0.43	0.79	0.47	11.28	6.30	3.35
536-LB	1.18	0.25	0.59	0.98	4.33	0.38	0.49	0.51	0.87	0.63	13.15	8.07	4.33

Available upon request

Vertical clamps in modular design

Weldable clamping bar
Handle accessory can be welded in place
Base plate
Swivel base version or mounting plate accessory available
LSC version with locking spring for securing the open position

Application areas

This clamp can be modified to suit the requirements of your fixture. The clamp bar, handles and base plates are welded onto the basic clamp linkage. This series of models is especially robust and precise due to its manufacturing process. These highly flexible vertical handle clamps are, therefore, especially suitable for welding operations in the automobile manufacturing sector, milling operations, locking foam molds and containers and all applications in which precision and high forces are required.

Product features

Hardened, polished bushings
Hardened, polished bolts
Parts drop-forged
Adjustable clamping bar opening angle on LSC versions

Model number code

5 03-MB LSC

- LSC — Locking hold-open device
- MB — Base option
  - B = swivel mounting base
  - MB = swivel mounting base
  - MLB = mounting plate
- 03 — Design/size
- 5 — Heavy-duty vertical clamp in modular design

Model 505-MLB in a robot-type welding fixture

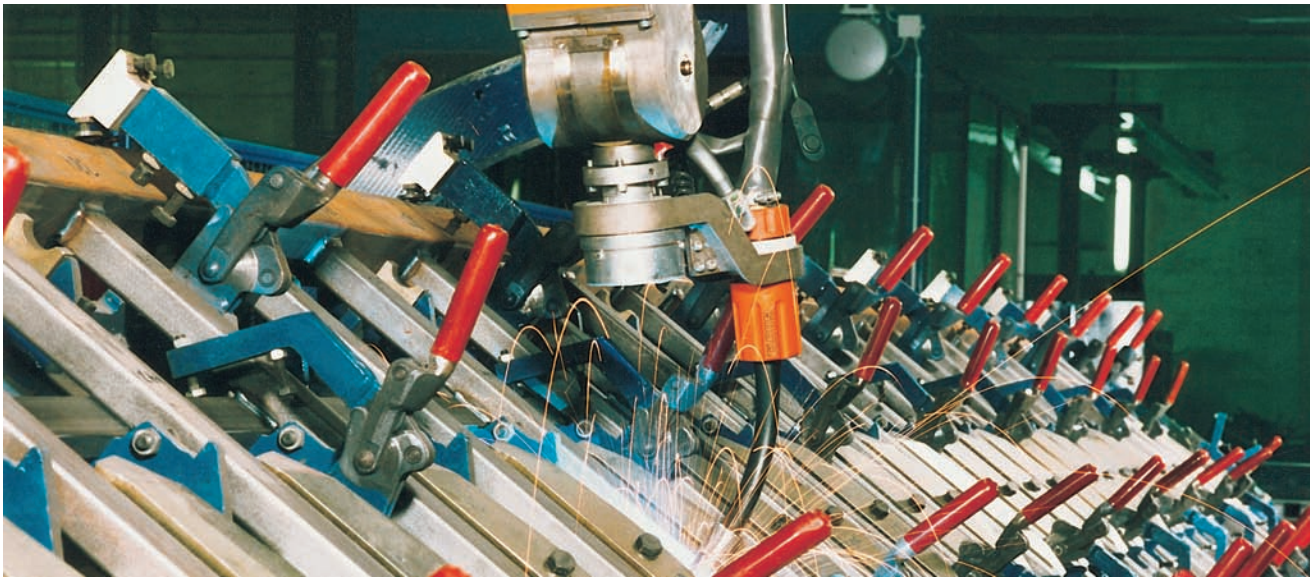

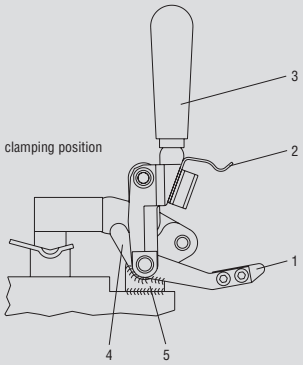

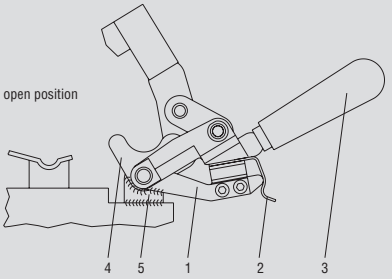

Hold-open device

1. Mount and close the clamp
2. Weld guide links 4 to the base 5
3. Weld the base 5 to the fixture
4. Lock the hold-open arm 1 in the leaf spring 2
5. Set the clamp in the desired opening position
6. Maintain this position and weld the hold-open arm 1 to the side of the clamp 4

Models 501-B, 503-MB, 503-MBLSC, 505-MB, 505-MBLSC, 506-MB, 506-MBLSC

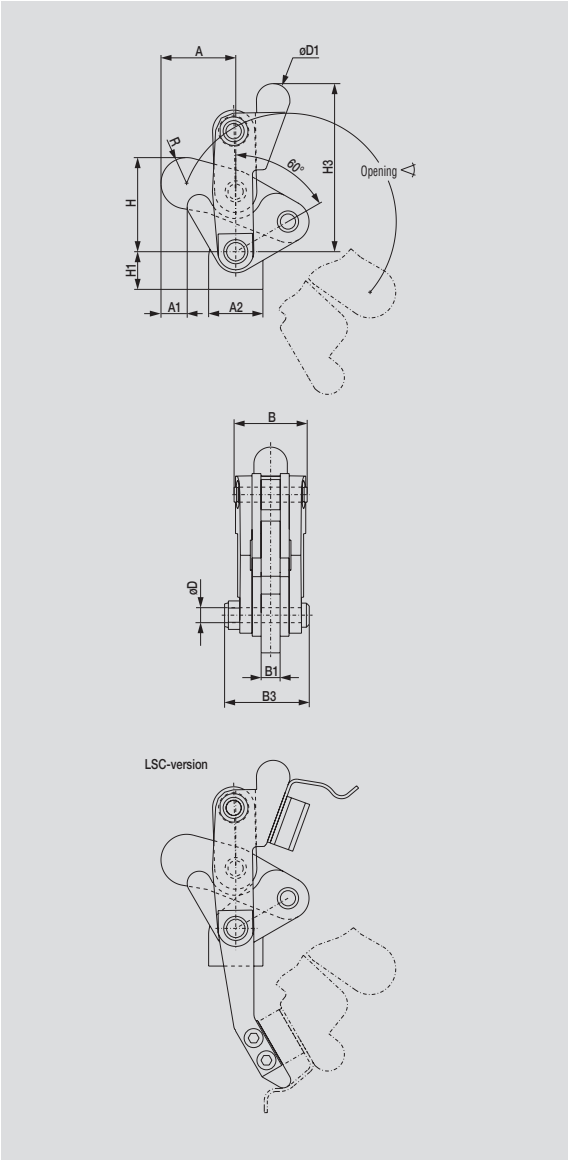

Model no.	Holding Capacity [lbs.]	Bar Opening +10°	[lbs.]
501-B	560	200°	0.50
503-MB	1,500	200°	1.50
503-MBLSC	1,500	200°	1.50
505-MB	2,400	200°	3.00
505-MBLSC	2,400	200°	3.00
506-MB	5,000	200°	5.70
506-MBLSC	5,000	200°	5.70

Model 503-MB

Model 503-MBLSC

Model no.	A	A1	A2	B	B1	B3	øD	øD1	H	H1	H3	R			
501-B	28.50	14.50	19.00	28.00	6.40	28.00	4.70	12.00	28.00	20.00	56.00	9.50			
503-MB	39.50	13.00	28.50	38.50	10.00	45.00	7.90	18.00	51.00	20.00	88.50	13.50			
503-MBLSC	39.50	13.00	28.50	38.50	10.00	45.00	7.90	18.00	51.00	20.00	88.50	13.50			
505-MB	56.50	25.00	35.00	48.00	12.30	54.00	9.50	22.00	71.50	28.00	110.00	18.00			
505-MBLSC	56.50	25.00	35.00	48.00	12.30	54.00	9.50	22.00	71.50	28.00	110.00	18.00			
506-MB	72.00	32.50	51.00	60.00	16.00	67.00	12.70	28.00	87.50	33.00	135.00	21.00			
506-MBLSC	72.00	32.50	51.00	60.00	16.00	67.00	12.70	28.00	87.50	33.00	135.00	21.00			

Available upon request

Note: Dimensions are shown in metric (mm).

Models 501-LB, 503-MLB, 503-MLBLSC, 505-MLB, 505-MLBLSC, 506-MLB, 506-MLBLSC

Model no.	Holding Capacity [lbs.]	Bar Opening +10°	[lbs.]
501-LB	560	200°	0.50
503-MLB	1,500	200°	1.50
503-MLBLSC	1,500	200°	1.50
505-MLB	2,400	200°	3.00
505-MLBLSC	2,400	200°	3.00
506-MLB	5,000	200°	5.70
506-MLBL	5,000	200°	5.70

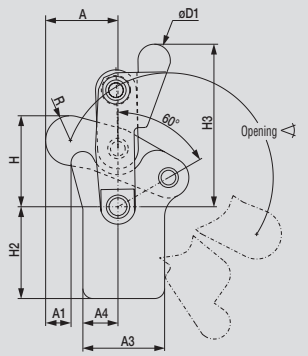

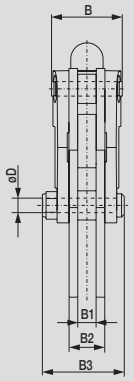

Model 503-MLB

LSC-version

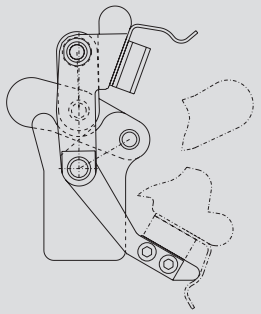

Model 503-MLBLSC

Model no.	A	A1	A3	A4	B	B1	B2	B3	øD	øD1	H	H2	H3	R
501-LB	28.50	15.00	27.00	13.50	28.00	6.40	13.00	28.00	4.70	12.00	28.00	33.50	56.00	9.50
503-MLB	39.50	14.00	44.50	19.00	38.50	10.00	19.50	45.00	7.90	18.00	51.00	50.00	88.50	13.50
503-MLBLSC	39.50	14.00	44.50	19.00	38.50	10.00	19.50	45.00	7.90	18.00	51.00	50.00	88.50	13.50
505-MLB	56.50	29.00	53.00	27.50	48.00	12.30	21.50	54.00	9.50	22.00	71.50	63.50	110.0	18.00
505-MLBLSC	56.50	29.00	53.00	27.50	48.00	12.30	21.50	54.00	9.50	22.00	71.50	63.50	110.0	18.00
506-MLB	72.00	35.50	65.50	37.00	60.00	16.00	28.50	67.00	12.70	28.00	87.50	76.00	135.5	21.00
506-MLBLSC	72.00	35.50	65.50	37.00	60.00	16.00	28.50	67.00	12.70	28.00	87.50	76.00	135.5	21.00

Available upon request

Note: Dimensions are shown in millimeters

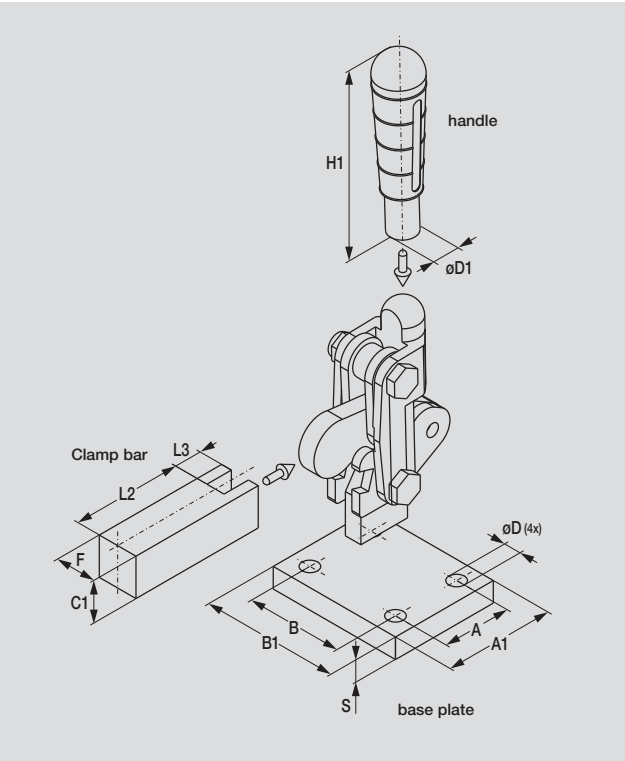

The modular design of this series of models allows you to set up the vertical clamp according to your specific requirements.

The clamping bar, the baseplate and the handle can be adapted to suit the fixture.

Important note

The forged parts must be heated up to 400° F (200° C) prior to the welding operation. For this reason, the handle and clamping arm should be welded together with the disassembled mating parts of the clamp. Ideal for welding in the cold state, welding additives must be used.

Completion parts (made of low carbon steel) Fitting the vertical clamps Heavy version See pages 2.25 and 2.26	 Handle		Clamping Bar 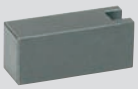				Baseplate 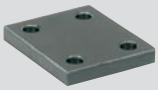						Model no.
	øD1	~H1	C1	F	L2	L3	A	A1	B	B1	øD	S	
Series **501** (all models)	6x10	61	–	–	–	–	–	–	–	–	–	–	501503
	–	–	15	15	40	10	–	–	–	–	–	–	501501
Model **501-B**	–	–	–	–	–	–	25	40	35	50	6.3	8	503502
Series **503** (all models)	ø18	104.5	–	–	–	–	–	–	–	–	–	–	503503
	ø18	129.5	–	–	–	–	–	–	–	–	–	–	503503-L
	–	–	25	20	50	8	–	–	–	–	–	–	503501
Models **503-MB, 503-MBLSC**	–	–	–	–	–	–	25	40	35	50	6.3	8	503502
Series **505** (all models)	ø22	114	–	–	–	–	–	–	–	–	–	–	505503
	ø22	159	–	–	–	–	–	–	–	–	–	–	505503-L
	–	–	30	25	60	12	–	–	–	–	–	–	505501
Models **505-MB, 505-MBLSC**	–	–	–	–	–	–	40	60	30	50	8.1	8	505502
Series **506** (all models)	ø28	123	–	–	–	–	–	–	–	–	–	–	506503
	ø28	188	–	–	–	–	–	–	–	–	–	–	506503-L
	–	–	35	30	75	15	–	–	–	–	–	–	506501
Model **506-MB, 506-MBL**	–	–	–	–	–	–	50	70	45	65	8.1	8	506502

Note: Dimensions are shown in millimeters

Cam action clamps for variable workpiece thickness

Ideal for variable workpiece thickness
Heavy-duty clamping bar
Flanged base

Application areas

The DE-STA-CO cam clamps have a high-to-low limit clamping range that automatically compensates for part thickness variation and therefore eliminates time-consuming readjustments. The cam action resists vibrational loosening. They are built to take abuse. The clamps are available in five sizes. Part variation thickness allowance is from 1/8" to 3/8".

Product features

Parts casted
Hardened bushings
Includes mounting holes

Models 7-101, 7-58, 7-59,7-60, 7-61

Model no.	Holding Capacity [lbs.]	Bar Opening +10°	[lbs.]
7-101	475	80°	1.00
7-58	600	95°	2.00
7-59	1,000	95°	3.00
7-60	1,600	80°	5.00
7-61	3,750	90°	15.00

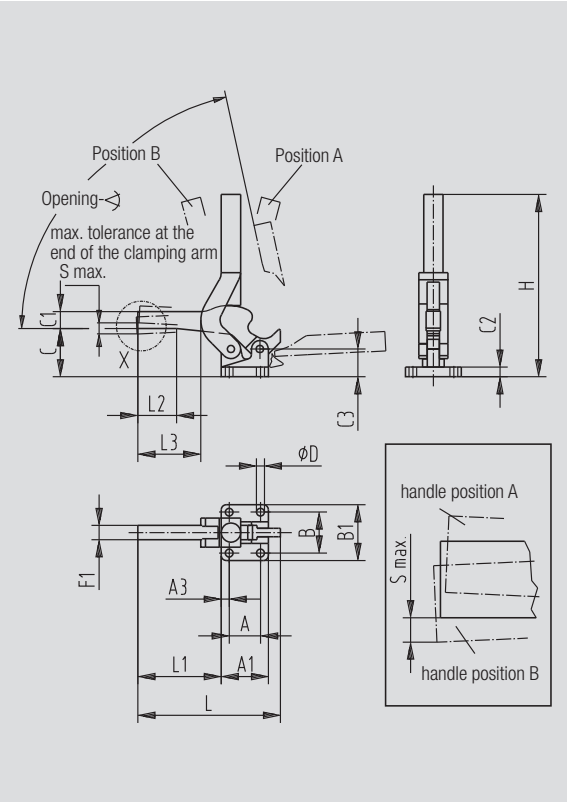

Model 7-101

Model 7-60

Model no.	A	A1	A3	B	B1	C	C1	C2	C3	øD	F1	H	L	L1	L2	S Max.
7-101	0.75	1.25	0.25	1.25	1.75	1.44	0.50	0.31	1.00	0.22	0.49	5.00	4.62	3.12	–	0.13
7-58	1.00	1.69	0.34	1.62	2.25	1.87	0.56	0.38	1.12	0.28	0.50	7.00	6.99	2.55	–	0.13
7-59	1.38	2.06	0.39	1.88	2.50	2.19	0.63	0.44	1.25	0.34	0.63	8.50	6.00	3.50	1.24	0.19
7-60	1.62	2.44	0.44	2.12	2.88	2.50	0.88	0.50	1.44	0.41	0.75	9.50	7.40	4.38	1.97	0.25
7-61	2.00	3.00	0.50	3.50	4.50	2.86	1.25	0.62	1.68	0.53	1.13	13.93	9.76	5.93	–	0.38

U-shaped or solid clamping bar

Application areas

Ideal for applications in the assembly industry in which workholding is performed with clamping forces of up to 500 lbs., including assembling, drilling, testing, positioning, milling and other processing operations.

Product features

Torsion-protected, hardened bushings
Rivets made of stainless steel
Zinc plated
Oil-resistant, ergonomically shaped DE-STA-CO handle grip

Accessories

Vertical handle clamps with a U-shaped clamping arm can be ordered in two varieties:

Standard model number: The matching standard adjustment spindle is included

Model number containing "-LS": The model is delivered with two flanged washers without an adjustment spindle.

NEW

Model 207-SF

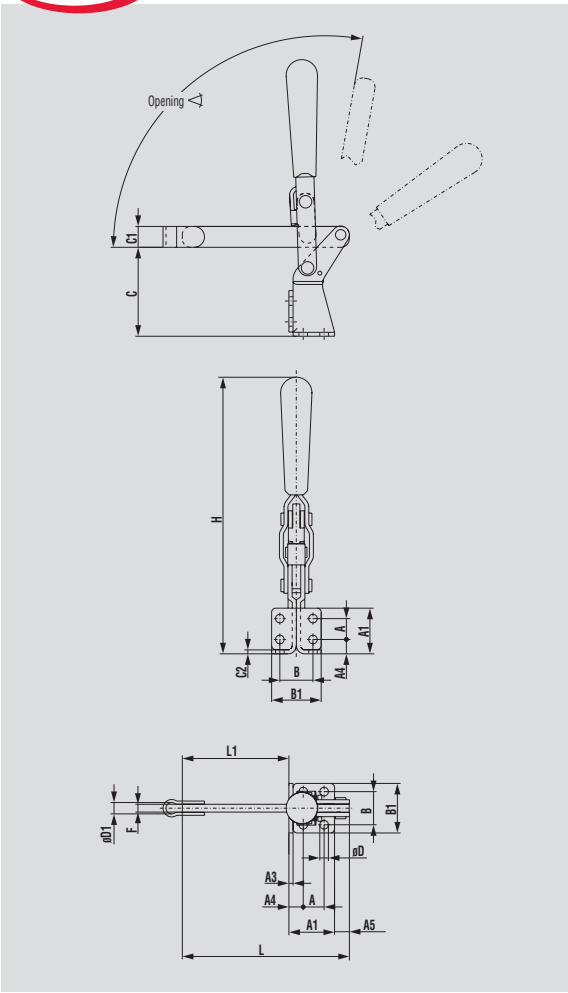

Model no.	Holding Capacity [lbs.]	Bar Opening +10°	[lbs.]	Bolt Retainer
207-SF	500	90°	0.84	207105

See additional adjustment spindles beginning on page 9.1.

Model no.	A	A1	A3	A4	A5	B	B1	C	C1	C2	øD	øD1	F	H	L	L1	M		
207-SF	0.63	1.38	0.12	0.43	0.45	1.00	1.50	2.68	0.63	0.12	0.26	0.33	0.24	8.15	5.04	3.21	M8		

Available upon request

Model 207-UF

NEW

Model no.	Holding Capacity [lbs.]	Bar Opening +10°	[lbs.]	Standard equipment	Flanged Washers
207-UF	375	90°	0.94	225208-M	507107
207-UF-LS				without spindle	507107
See additional adjustment spindles beginning on page 9.1					

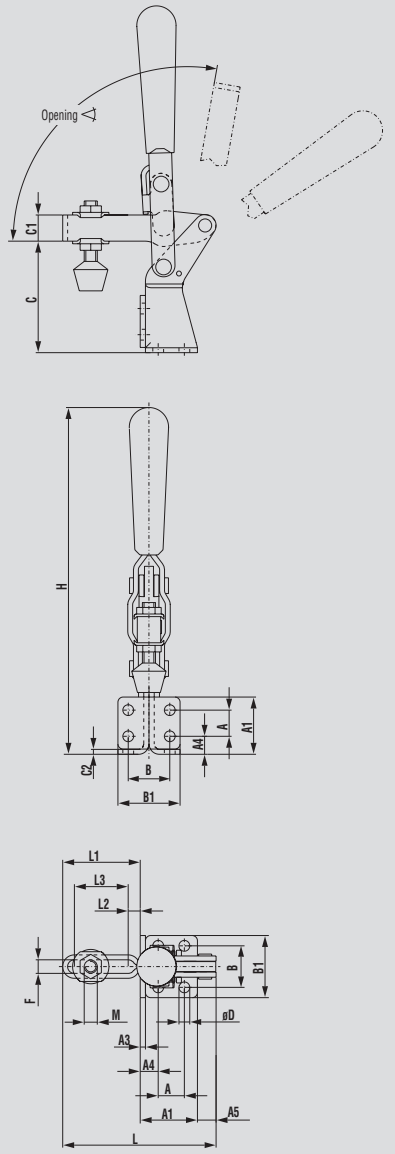

Model no.	A	A1	A3	A4	A5	B	B1	C	C1
207-UF	0.63	1.38	0.12	0.43	0.45	1.00	1.50	2.68	0.63

Model no.	C2	øD	F	H	L	L1	L2	L3	M
207-UF	0.12	0.26	0.33	8.15	3.70	1.87	0.30	1.30	M8
Available upon request									

With very large opening angle

Application areas

Ideal for all areas of the assembly industry in which workholding is performed with holding capacities of up to 375 lbs. For example, assembling, drilling, testing, positioning, milling and other processing operations.

Product features

Extremely large arm opening angle (185º)
Handle position is identical in clamped position and open position
Torsion-protected, hardened bushings
Rivets made of stainless steel
Zinc plated
Oil-resistant, ergonomically shaped DE-STA-CO handle grip

Accessories

Vertical clamps with a U-shaped clamping bar can be ordered in two varieties:

Standard model number: The standard adjustment spindle is included

Model number containing "-LS": The model is delivered with two flange washers without an adjustment spindle

Model 317-S

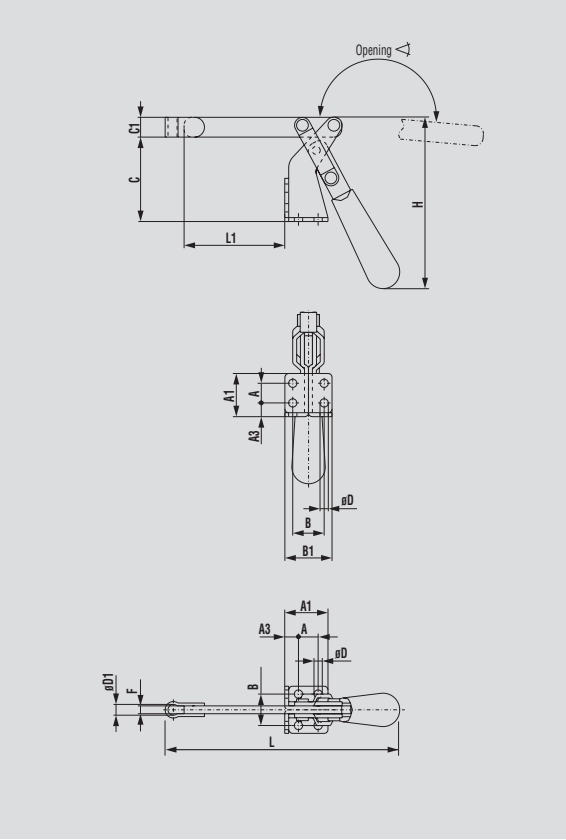

Model no.	Holding Capacity [lbs.]	Bar Opening +10º	Handle Moves	[lbs.]	Bolt Retainer
317-S	375	185°	60°	0.75	207105

ALSO AVAILABLE		
As Air Hydraulic	Model 817-S	Page 11.14
See accessories beginning on page 9.1.		
See section 16 for holding capacity charts.		

Solid clamping bar
Dual position mounting base

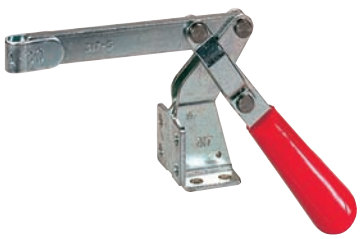

Model no.	A	A1	A3	B	B1	C	C1	øD	øD1	F	H	L	L1
317-S	0.63	1.38	0.44	1.00	1.50	2.69	0.63	0.27	0.33	0.25	5.54	6.57	3.20

Model 317-U

Model no.	Holding Capacity [lbs.]	Bar Opening +10°	Handle Moves	[lbs.]	Standard equipment
317-U 317-U-LS	375	185°	60°	0.75	507208-M without spindle

ALSO AVAILABLE		
As Air Hydraulic	Model 817-U	Page11.15
See accessories beginning on page 9.1.		
See section 16 for holding capacity charts.		

U-shaped clamping bar
Dual position mounting base

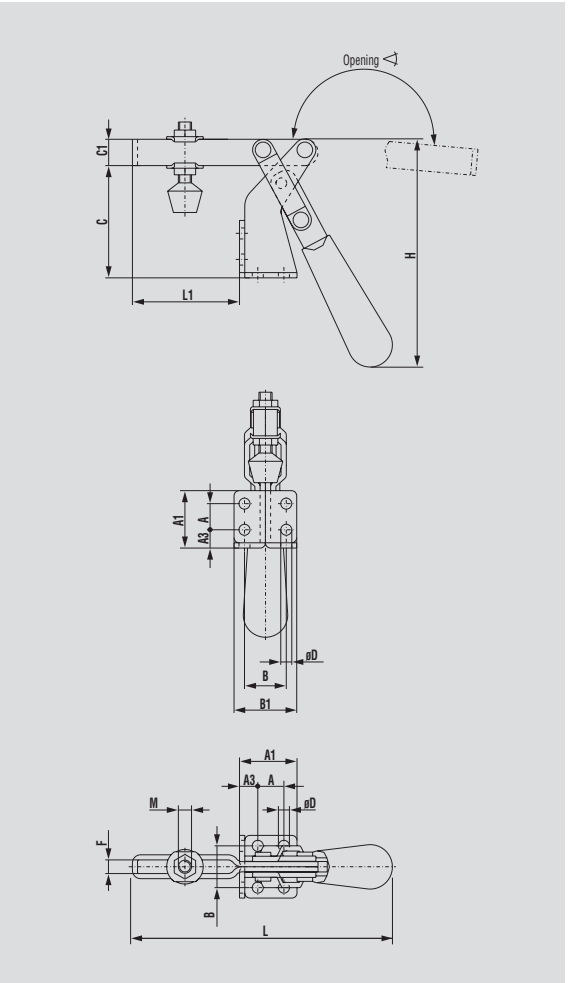

Model no.	A	A1	A3	B	B1	C	C1	øD	F	H	L	L1	M					
317-U	0.63	1.38	0.44	1.00	1.50	2.68	0.63	0.27	0.34	5.64	5.90	2.53	M8 or 5/16					

With very large opening angle

Heavy-duty clamping bar
With flanged base or front mount

Application areas

Ideal for all areas in which workholding is performed with holding capacities of up to 2,500 lbs. Due to design, these models are especially suitable for use in demanding work environments, including assembling, drilling, testing, positioning, milling and other processing operations.

The heavy-duty clamping bar can be shortened or lengthened to the desired length, and holes can be drilled (for spindle assembly).

Product features

Extremely large opening angle (195º)
Handle position is identical in the clamped position and open position
Torsion-protected, hardened bushings
Rivets made of stainless steel
Additional lever added to the link to facilitate one-handed operation for opening and closing.

Model 527

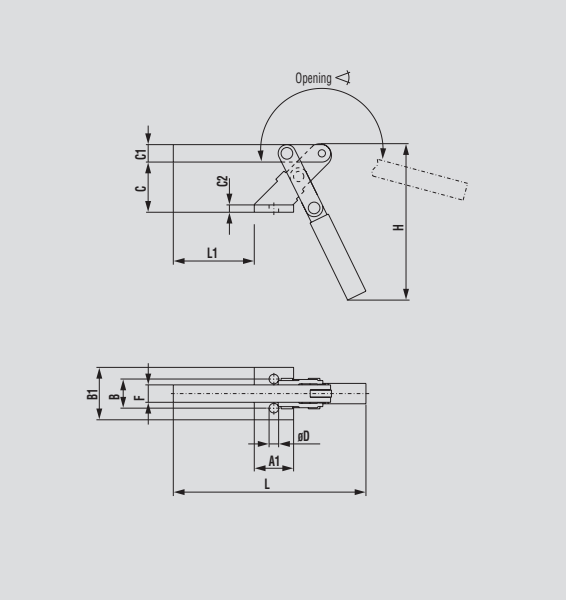

Model no.	Holding Capacity [lbs.]	Bar Opening +10º	Handle Moves	[lbs.]	Standard equipment
527	1,000	195°	65°	2.50	none

Solid clamping bar
Flanged base

Model no.	A1	B	B1	C	C1	C2	øD	F	H	L	L1
527	1.77	1.25	2.25	2.20	0.75	0.21	0.41	0.75	7.08	8.63	3.27

Model 527-F

Model no.	Holding Capacity [lbs.]	Bar Opening +10°	Handle Moves	[lbs.]	Standard equipment
527-F	1,000	195°	65°	2.50	none

Solid clamping bar
Front mounting base

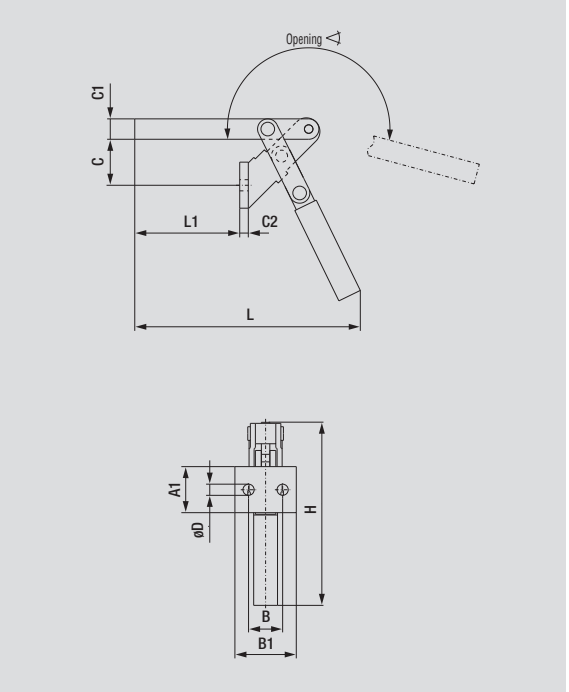

Model no.	A1	B	B1	C	C1	C2	øD	F	H	L	L1
527-F	1.77	1.25	2.25	1.92	0.75	0.21	0.41	0.75	7.34	8.65	3.81

Model 557

Model no.	Holding Capacity [lbs.]	Bar Opening +10°	Handle Moves	[lbs.]	Standard equipment
557	2,500	192°	64°	5.00	none

Solid clamping bar
Straight base

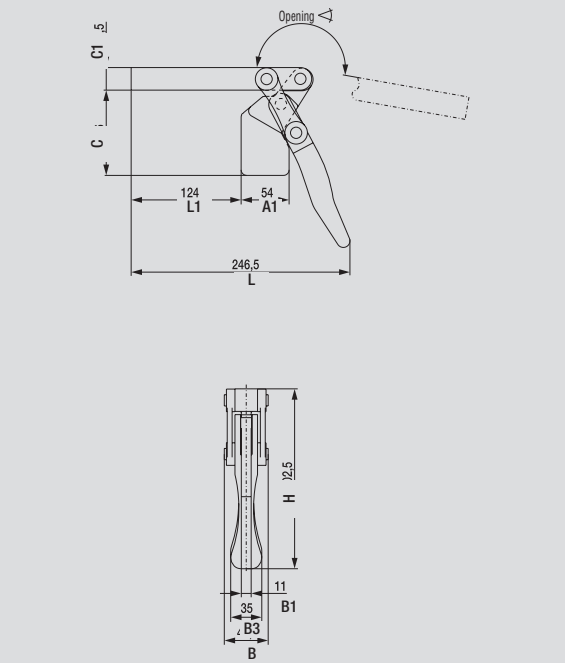

Model no.	A1	B	B1	B3	C	C1	F1	H	L	L1
557	2.13	1.93	0.44	1.38	3.75	1.00	1.00	8.13	9.31	4.81

Available upon request

Models 91090, 91140

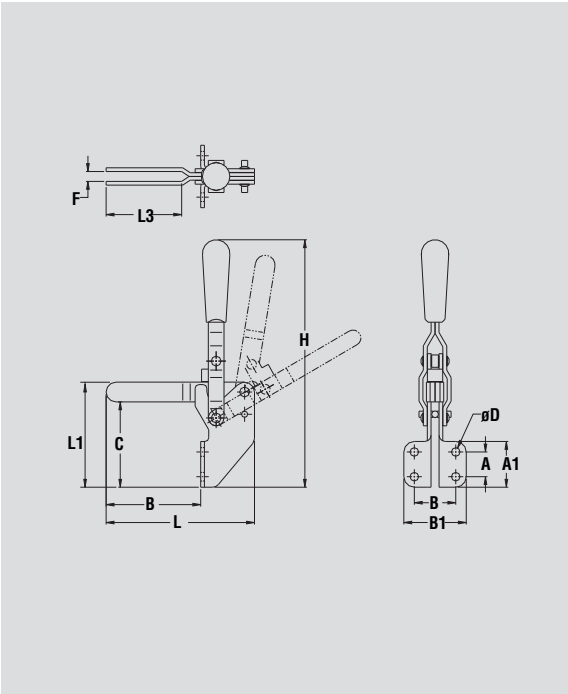

Model no.	Holding Capacity [lbs.]	Bar Opening +10°	Handle Moves	[lbs.]	Standard Equipment
91090	385	100°	60°	0.81	None
91140	1,000	100°	65°	3.10	None

See additional adjustment spindles beginning on page 9.1.

Model no.	A	A1	B	B1	C	øD	F	H	L	L1	L3
91090	0.80	1.32	1.29	2.09	2.68	0.28	0.33	7.68	4.72	3.09	2.40
91140	1.26	2.17	1.81	2.74	5.24	0.33	0.43	11.06	7.87	5.24	4.41

Model VH3

Information

Vertical handle toggle clamps for workholding. Toggle action locks the workpiece securely. The arm opens 100° for loading. Reinforced polymer spindle assembly with neoprene tip is included, and can be positioned on the arm using the convenient indicator.

Lightweight, non-conductive, chemical resistant
Locking toggle action
Spindle assembly included
Constructed of reinforced polymers combining high strength and light weight

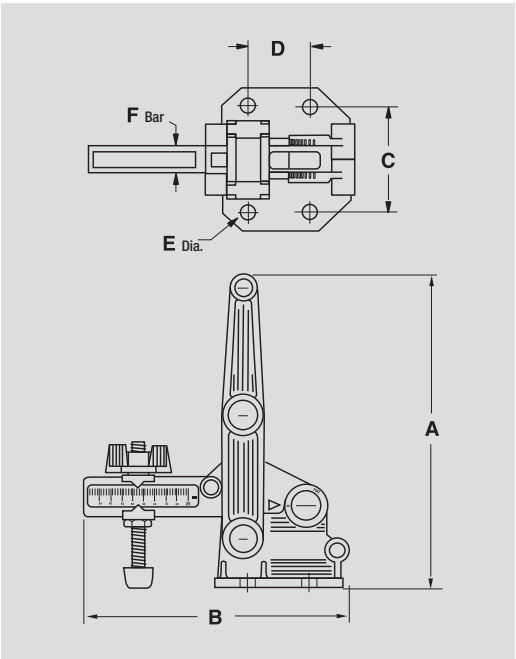

Model no.	Holding Capacity [lbs.]	[lbs.]	Standard equipment
VH3	200	0.25	Rubber-tipped composite spindle

See additional adjustment spindles beginning on page 9.1.

Model no.	A	B	C	D	E	F
VH3	5.63	4.75	1.89	1.10	0.28	0.47

Notes

NEW

2000 Horizontal Series:
Models 2013, 2017, 2027 and 2037

page 3.5

NEW

2000 Horizontal DE-STA-CO® Toggle Lock Plus Series:
Models 2013-R, 2017-R, 2027-R and 2037-R

page 3.7

Product group – horizontal clamps

Application areas

Application areas include clamping during the assembling, drilling, testing, gluing and locking of covers, and much more. The horizontal clamp is distinguished by the low profile of the clamping arm in the clamped position. Due to its minimum overall height, the horizontal clamp is especially suitable for installation in con fined spaces.

Basic product features

In the clamped position, the handle is horizontal (minimum overall height)

Horizontal clamp opening angles range from 90° to 105°

Horizontal clamps are offered with U-shaped and solid clamping bars

Horizontal clamps have a straight or flanged base

Model 205-U in a drilling fixture

	Model no.	Holding Capacity max. [lbs.]	Category	Page
	2013-U 2017-U 2027-U 2037-U	295 560 840 1,680	NEW! Standard NEW! Standard NEW! Standard NEW! Standard	3.5
	2013-UB 2017-UB 2027-UB 2037-UB	295 560 840 1,680	NEW! Standard NEW! Standard NEW! Standard NEW! Standard	3.6
	2013-UR 2017-UR 2027-UR 2037-UR	295 560 840 1,680	NEW! DE-STA-CO® Toggle Lock Plus NEW! DE-STA-CO® Toggle Lock Plus NEW! DE-STA-CO® Toggle Lock Plus NEW! DE-STA-CO® Toggle Lock Plus	3.7
	2013-UBR 2017-UBR 2027-UBR 2037-UBR	295 560 840 1,680	NEW! DE-STA-CO® Toggle Lock Plus NEW! DE-STA-CO® Toggle Lock Plus NEW! DE-STA-CO® Toggle Lock Plus NEW! DE-STA-CO® Toggle Lock Plus	3.8
	205-S 205-SL 205-SR 215-S	60 60 60 200	Standard Standard Standard Standard	3.9
	205-SB 215-SB	60 200	Standard Standard	3.10
	205-U 205-UL 205-UR 215-U 225-U 235-U	60 60 60 200 500 750	Standard Standard Standard Standard Standard Standard	3.11
	205-UB 215-UB 225-UB 235-UB	60 200 500 750	Standard Standard Standard Standard	3.12

	Model no.	Holding Capacity max. [lbs.]	Category	Page
	225-UR 235-UR	500 750	Standard Standard	3.13
	213-U 217-U 227-U 237-U 245-U	150 200 500 750 1,000	Standard Standard Standard Standard Standard	3.14
	213-UB 217-UB 227-UB 237-UB	150 200 500 750	Standard Standard Standard Standard	3.15
	305-U 307-U 309-U	150 350 750	Standard Standard Standard	3.16
	305-UR 307-UR 309-UR	150 350 750	Compact Compact Compact	3.17
	515 515-B	800 800	Standard Standard	3.18

2000-Series, horizontal clamps

NEW

Robust Design
Offers an average of twice the holding capacity of our legacy products
Low arm deflection under load (greater stiffness)

Long Handle
Increased operator comfort

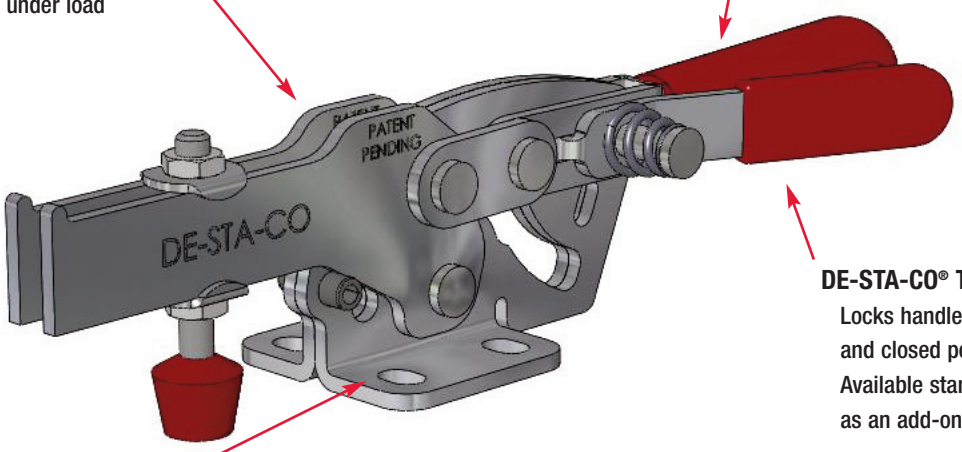

DE-STA-CO® Toggle Lock Plus
Locks handle in open and closed positions
Available standard or as an add-on kit

Common Hole Pattern
Interchangeable with legacy clamp models:
- 213-U
- 217-U
- 227-U
- 237-U

NEW PHOTO COMING FROM DSC

Large Hand Clearance
Eliminates “knuckle busters”

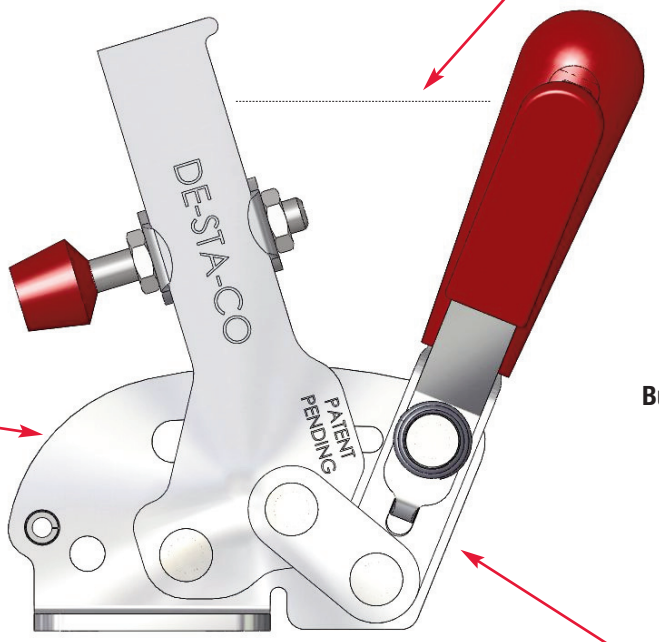

Adjustable Pre-load
Eliminates arm play for locating applications
Two positions available
(use upper hole first; lower hole as clamp wears)

Bushings at Key Pivot Points
Provides long life and smooth operation

Low Pivot Point
Provides perpendicular clamping force

Fixed Handle Pivot
Eliminates sticking points
Provides smooth action

NEW

Patent Pending

Models 2013-U, 2017-U, 2027-U, 2037-U

Model no.	Holding Capacity [lbs.]	Bar Opening +10°	[lbs.]	Standard equipment	Flanged Washers
2013-U	295	71°	0.37	2013208-M	102111
2013-U-LS				without spindle	102111
2017-U	560	73°	0.97	215208-M	215105
2017-U-LS				without spindle	215105
2027-U	840	68°	1.34	2007208-M	507107
2027-U-LS				without spindle	507107
2037-U	1,680	73°	.95	240208-M	410P1312
2037-U-LS				without spindle	410P1312

ALSO AVAILABLE

As DE-STA-CO® Toggle Lock Plus	Models 2013-UR, 2017-UR, 2027-UR, 2037-UR	Page 3.6

See accessories beginning on page 9.1.

Flanged base

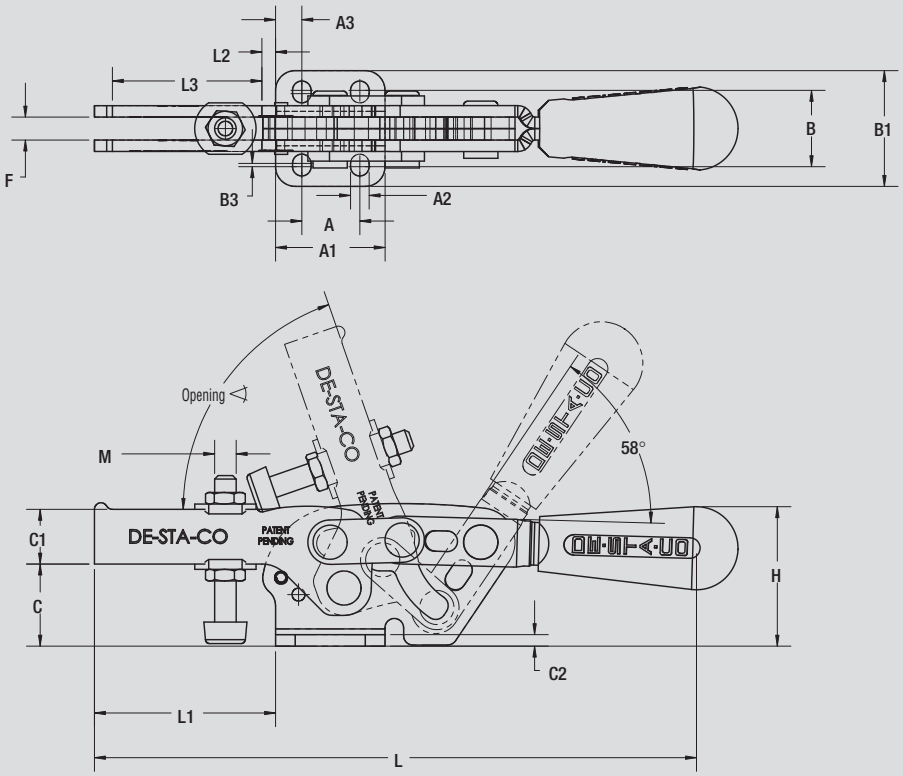

.Model no.	A	A1	A2	A3	B	B1	B3	C	C1	C2	F	H	L	L1	L2	L3	M
2013-U	0.53	1.00	0.17	0.24	0.70	1.06	0.03	0.75	0.50	0.11	0.21	1.27	5.88	1.65	0.41	0.83	M5 or 10-32
2017-U	1.03	1.68	0.27	0.32	1.21	1.86	0.11	0.98	0.75	0.12	0.24	1.95	8.62	2.53	0.55	1.48	M6 or 1/4-20
2027-U	1.03	1.56	0.27	0.40	1.21	1.81	0.11	1.32	0.75	0.16	0.33	2.20	9.88	2.86	0.81	1.44	M8 or 5/16-18
2037-U	1.63	2.43	0.34	0.40	1.69	2.50	0.08	1.62	1.00	0.16	0.42	2.75	13.35	4.40	0.90	2.72	M10 or 3/8-16

Models 2013-UB, 2017-UB, 2027-UB, 2037-UB

NEW

Model no.	Holding Capacity [lbs.]	Bar Opening +10°	[lbs.]	Standard equipment	Flanged Washers
2013-UB	295	70°	0.37	2013208-M	102111
2013-UB-LS				without spindle	102111
2017-UB	560	73°	0.97	215208-M	215105
2017-UB-LS				without spindle	215105
2027-UB	840	70°	1.34	2007208-M	507107
2027-UB-LS				without spindle	507107
2037-UB	1,680	70°	2.95	240208-M	410P1312
2037-UB-LS				without spindle	410P1312

Patent Pending

ALSO AVAILABLE		
As DE-STA-CO® Toggle Lock Plus	Models 2013-UBR, 2017-UBR, 2027-UBR, 2037-UBR	Page 3.7

See accessories beginning on page 9.1.

Straight base

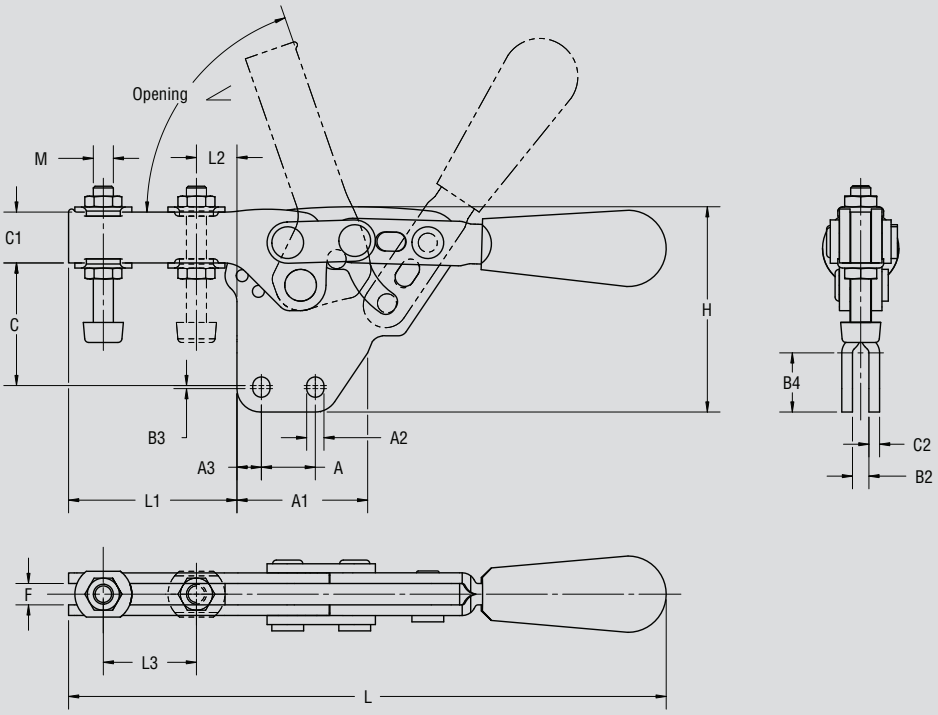

Model no.	A	A1	A2	A3	B2	B3	B4	C	C1	C2	F	H	L	L1	L2	L3	M
2013-UB	0.53	1.28	0.17	0.24	0.16	0.03	0.58	1.20	0.50	0.11	0.21	1.99	5.88	1.65	0.41	0.83	M5 or 10-32
2017-UB	1.03	1.92	0.27	0.32	0.20	0.11	0.86	1.60	0.75	0.12	0.24	3.00	8.62	2.53	0.55	1.48	M6 or 1/4-20
2027-UB	1.03	1.92	0.27	0.40	0.24	0.11	0.86	2.04	0.75	0.16	0.33	3.28	9.88	2.86	0.81	1.44	M8 or 5/16-18
2037-UB	1.63	2.64	0.34	0.40	0.32	0.08	1.13	2.56	1.00	0.16	0.42	4.17	13.35	4.40	0.90	2.72	M10 or 3/8-16

NEW

Models 2013-UR, 2017-UR, 2027-UR, 2037-UR

Patent Pending

Model no.	Holding Capacity [lbs.]	Bar Opening +10°	[lbs.]	Standard equipment	Flanged Washers
2013-UR	295	70°	0.37	2013208-M	102111
2013-UR-LS				without spindle	102111
2017-UR	560	73°	0.97	215208-M	215105
2017-UR-LS				without spindle	215105
2027-UR	840	70°	1.34	2007208-M	507107
2027-UR-LS				without spindle	507107
2037-UR	1,680	70°	2.95	240208-M	410P1312
2037-UR-LS				without spindle	410P1312

See additional adjustment spindles beginning on page 9.1.

Flanged base
DE-STA-CO® Toggle Lock Plus

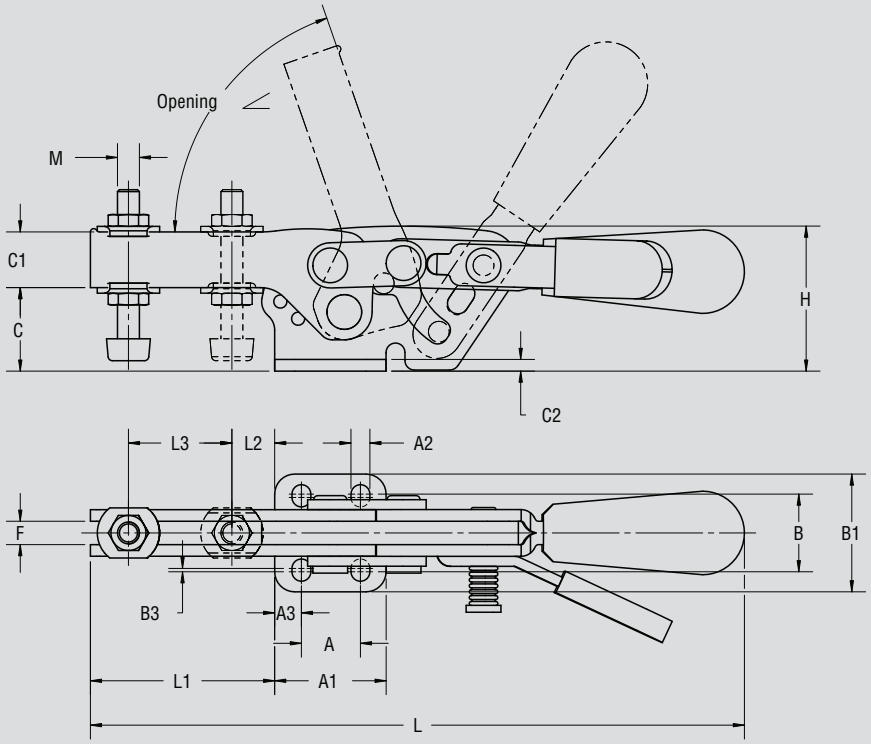

Model no.	A	A1	A2	A3	B	B1	B3	C	C1	C2	F	H	L	L1	L2	L3	M
2013-UR	0.53	1.00	0.17	0.24	0.70	1.06	0.03	0.75	0.50	0.11	0.21	1.27	5.88	1.65	0.41	0.83	M5 or 10-32
2017-UR	1.03	1.68	0.27	0.32	1.21	1.86	0.11	0.98	0.75	0.12	0.24	1.95	8.62	2.53	0.55	1.48	M6 or 1/4-20
2027-UR	1.03	1.56	0.27	0.40	1.21	1.81	0.11	1.32	0.75	0.16	0.33	2.20	9.88	2.86	0.81	1.44	M8 or 5/16-18
2037-UR	1.63	2.43	0.34	0.40	1.69	2.50	0.08	1.62	1.00	0.16	0.42	2.75	13.35	4.40	0.90	2.72	M10 or 3/8-16

Models 2013-UBR, 2017-UBR, 2027-UBR, 2037-UBR

NEW

Model no.	Holding Capacity [lbs.]	Bar Opening +10°	[lbs.]	Standard equipment	Flanged Washers
2013-UBR	295	70°	0.37	2013208-M	102111
2013-UBR-LS				without spindle	102111
2017-UBR	560	73°	0.97	215208-M	215105
2017-UBR-LS				without spindle	215105
2027-UBR	840	70°	1.34	2007208-M	507107
2027-UBR-LS				without spindle	507107
2037-UBR	1,680	70°	2.95	240208-M	410P1312
2037-UBR-LS				without spindle	410P1312

See additional adjustment spindles beginning on page 9.1

Patent Pending

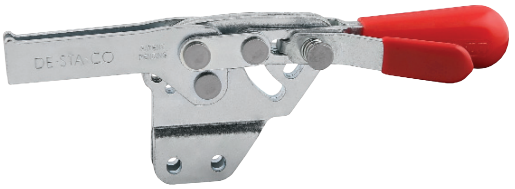

Straight base
DE-STA-CO® Toggle Lock Plus

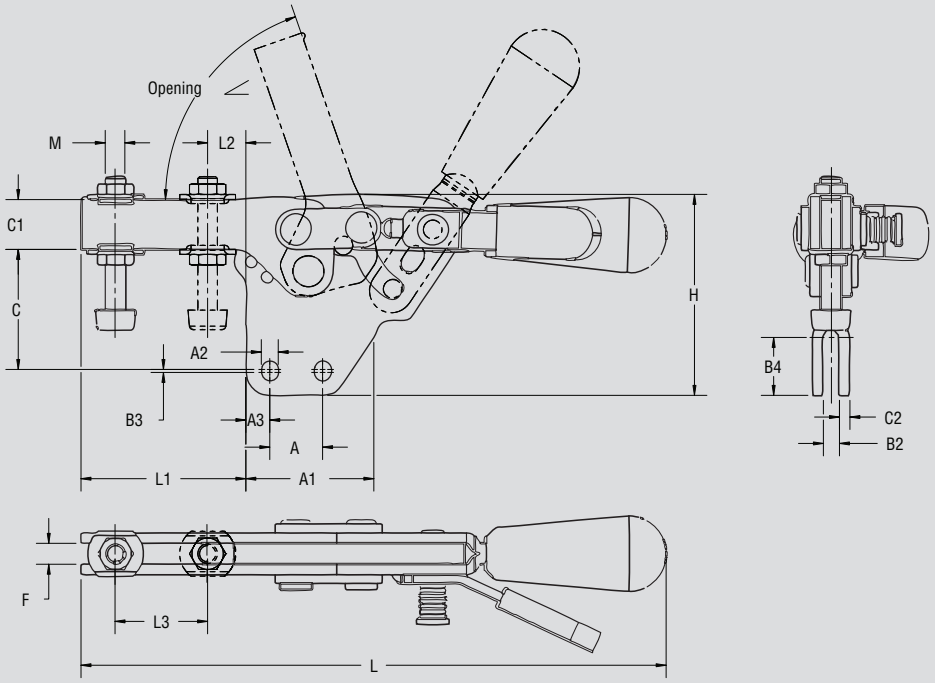

Model no.	A	A1	A2	A3	B2	B3	B4	C	C1	C2	F	H	L	L1	L2	L3	M
2013-UBR	0.53	1.28	0.17	0.24	0.16	0.03	0.58	1.20	0.50	0.11	0.21	1.99	5.88	1.65	0.41	0.83	M5 or 10-32
2017-UBR	1.03	1.92	0.27	0.32	0.20	0.11	0.86	1.60	0.75	0.12	0.24	3.00	8.62	2.53	0.55	1.48	M6 or 1/4-20
2027-UBR	1.03	1.92	0.27	0.40	0.24	0.11	0.86	2.04	0.75	0.16	0.33	3.28	9.88	2.86	0.81	1.44	M8 or 5/16-18
2037-UBR	1.63	2.64	0.34	0.40	0.32	0.08	1.13	2.56	1.00	0.16	0.42	4.17	13.35	4.40	0.90	2.72	M10 or 3/8-16

U-shaped and solid clamping bars
Flanged or straight base

Application areas

Ideal for all areas in which clamping work is performed with holding capacities of up to 750 lbs.

Applications Include assembling, drilling, testing, gluing and other processing operations. Suitable for use in welding fixtures, and gauge manufacturing, as well as in the woodworking industry.

Product features

Rivets made of stainless steel
Zinc plated
Oil-resistant, ergonomically shaped DE-STA-CO handle grip

Accessories

Horizontal clamps with a U-shaped clamping bar can be ordered in two varieties:

Standard model number: The standard adjustment spindle is included.
Model number containing "-LS": The model is delivered with two flanged washers without an adjustment spindle.

Models 205-S, 205-SL, 205-SR, 215-S

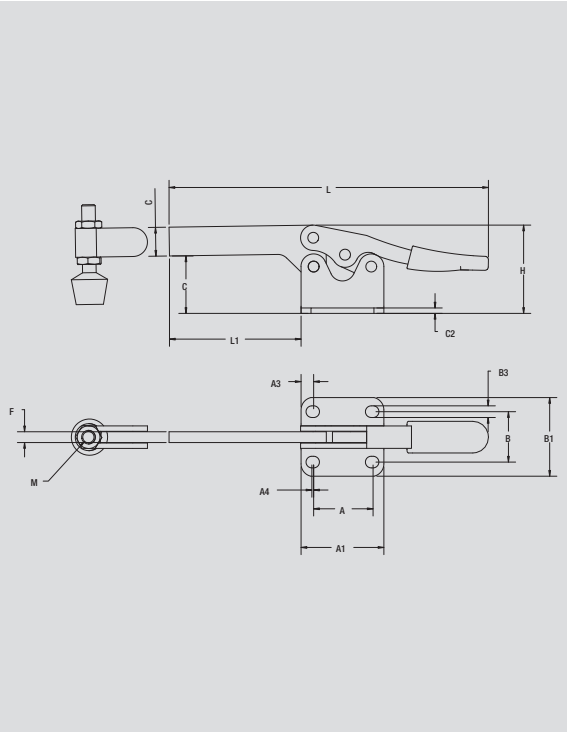

Model no.	Holding Capacity [lbs.]	Bar Opening +10°	[lbs.]	Standard equipment	Bolt Retainer
205-S	60	90°	0.06	205208-M	None
205-S-LS				without spindle	None
205-SL	60	90°	0.06	205208-M	None
205-SR	60	90°	0.06	205208-M	None
215-S	200	90°	0.34	202208-M	205105

ALSO AVAILABLE		
In Stainless Steel	Model 205-SSS	Page 8.6
See accessories beginning on age 9.1.		

Solid or fixed spindle bar
Flanged base

Model 215-S

Model 205-S

Model 205-SL

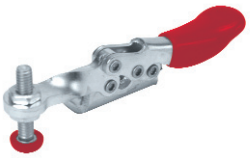

Model 205-SR

Model no.	A	A1	A3	A4	A5	B	B1	B3	C	C1	C2	F	H	L	L1	M
205-S	0.44	0.94	0.16	0.63	0.30	0.62	0.93	0.17	0.37	0.12	0.06	0.17	0.67	2.78	0.88	M4 or #10
205-SL	0.44	0.94	0.16	0.63	0.30	–	–	0.17	0.37	0.12	0.06	0.17	0.67	2.78	0.88	M4 or #10
205-SR	0.44	0.94	0.16	0.63	0.30	–	–	0.17	0.37	0.12	0.06	0.17	0.67	2.78	0.88	M4 or #10
215-S	1.00	1.44	0.19	1.06	0.43	0.88	1.37	0.20	1.03	–	0.10	–	1.53	5.50	2.31	M6 or 1/4

Models 205-SB, 215-SB

Model no.	Holding Capacity [lbs.]	Bar Opening +10°	[lbs.]	Standard equipment	Bolt Retainer
205-SB	60	90°	0.06	205208-M	None
205-SB-LS				without spindle	None
215-SB	200	90°	0.34	202208-M	205105

See additional adjustment spindles beginning on page 9.1

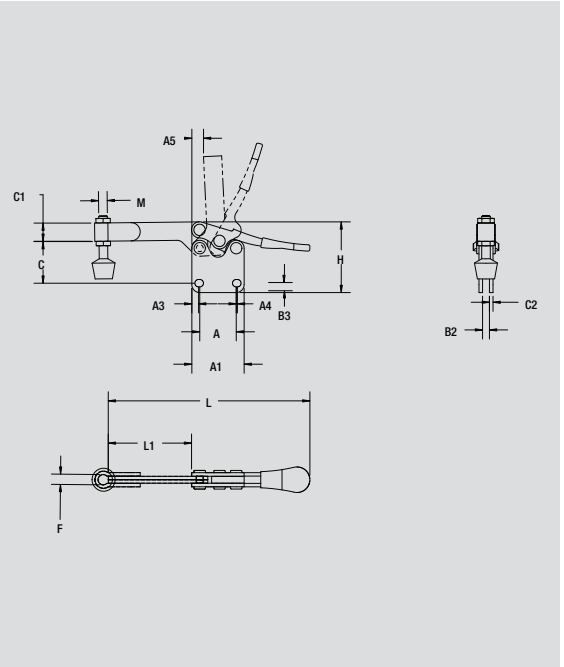

Straight bases
Solid or fixed spindle bars

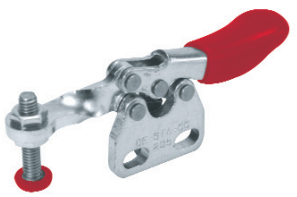

Model 205-SB

Model 215-SB

Model no.	A	A1	A3	A4	A5	B2	B3	C	C1	C2	F	H	L	L1	M
205-SB	0.44	0.94	0.16	0.63	0.30	–	0.17	0.37	0.12	0.06	0.17	0.67	2.78	0.88	M4 or #10
215-SB	1.00	1.44	0.19	1.06	0.43	0.19	0.20	1.28	0.50	0.10	0.28	1.78	5.50	2.31	M6 or #10

Available upon request

Models 205-U, 205-UL, 205-UR, 215-U, 225-U, 235-U

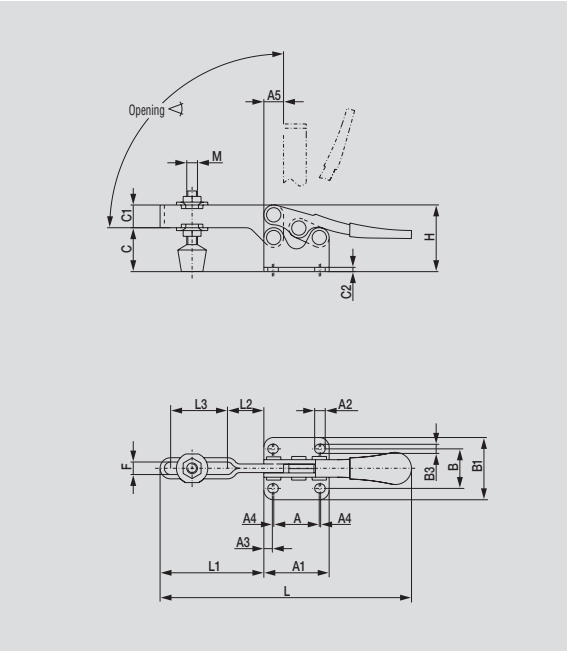

Model no.	Holding Capacity [lbs.]	Bar Opening +10°	[lbs.]	Standard equipment	Flanged Washers
205-U	60	90°	0.06	205208-M	105106
205-U-LS				without spindle	105106
205-UL	60	90°	0.06	205208-M	105106
205-UR	60	90°	0.06	205208-M	105106
215-U	200	90°	0.34	202208-M	215105
215-U-LS				without spindle	215105
225-U	500	90°	0.55	225208-M	507107
225-U-LS				without spindle	507107
235-U	750	90°	1.47	240208-M	235106
235-U-LS				without spindle	235106

ALSO AVAILABLE		
In Stainless Steel	Model 205-USS	Page 8.6
	Model 215-USS	Page 8.6
	Model 225-USS	Page 8.6
	Model 235-USS	Page 8.6
As DE-STA-CO® Toggle Lock Plus	Model 225-UR	Page 3.12
	Model 235-UR	Page 3.12
See accessories beginning on page 9.1.		

U-shaped clamping bar
Flanged base

Model 215-U (Shown)

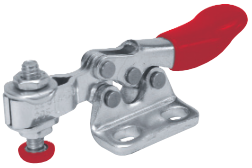

Model 205-UL

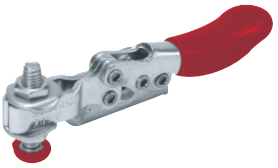

Model 205-UR

Model no.	A	A1	A2	A3	A4	A5	B	B1	B3	C	C1	C2	F	H	L	L1	L2	L3	M
205-U	0.44	0.94	–	0.16	0.63	0.22	0.62	0.93	0.17	0.31	0.26	0.06	0.20	0.67	2.65	0.74	0.26	0.37	M4 or #10
205-UL	0.44	0.94	–	0.16	0.63	0.22	–	–	0.17	0.31	0.26	0.06	0.20	0.67	2.65	0.74	0.26	0.37	M4 or #10
205-UR	0.44	0.94	–	0.16	0.63	0.22	–	–	0.17	0.31	0.26	0.06	0.20	0.67	2.65	0.74	0.26	0.37	M4 or #10
215-U	1.00	1.44	–	0.19	1.06	0.43	0.88	1.37	0.20	1.00	0.49	0.10	0.28	1.53	5.50	2.25	0.81	1.25	M6 or 1/4
225-U	1.00	1.50	0.26	0.25	–	0.49	0.88	1.38	0.30	1.32	0.49	0.12	0.31	1.84	6.70	2.72	1.08	1.39	M8 or 5/16
235-U	1.63	2.25	–	0.37	–	0.69	1.63	2.25	0.34	1.75	0.75	0.16	0.43	2.55	10.87	4.16	1.61	2.28	M10 or 3/8

Models 205-UB, 215-UB, 225-UB, 235-UB

Model no.	Holding Capacity [lbs.]	Bar Opening +10°	[lbs.]	Standard equipment	Flanged Washers
205-UB	60	90°	0.06	205208-M	105106
205-UB-LS				without spindle	105106
215-UB	200	90°	0.34	202208-M	215105
215-UB-LS				without spindle	215105
225-UB	500	90°	0.55	225208-M	507107
225-UB-LS				without spindle	507107
235-UB	750	90°	1.47	240208-M	235106
235-UB-LS				without spindle	235106

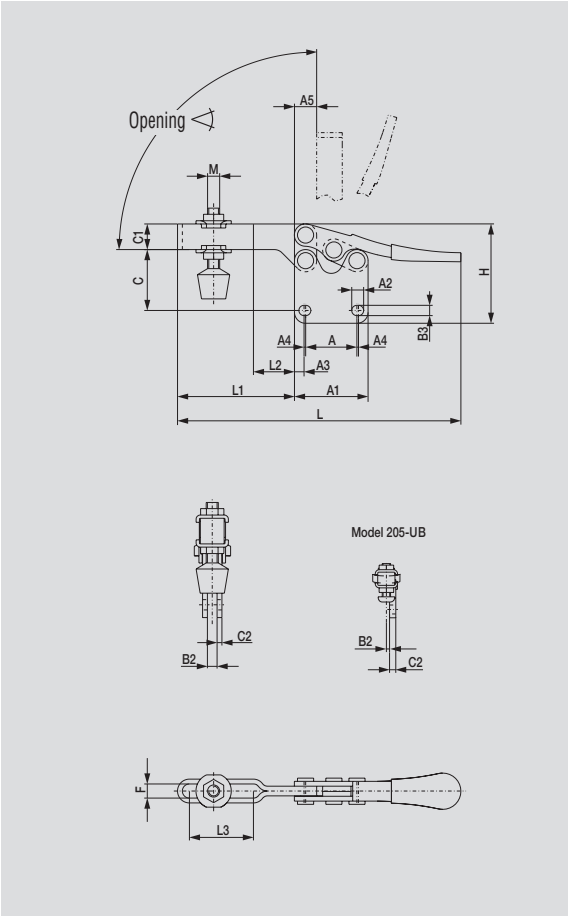

ALSO AVAILABLE		
In Stainless Steel	Model 225-UBSS	Page 8.9
See accessories beginning on page 9.1.		

U-shaped clamping bar
Straight base

Model 215-UB (Shown)

Model no.	A	A1	A2	A3	A4	A5	B2	B3	C	C1	C2	F	H	L	L1	L2	L3	M
205-UB	0.44	0.94	0.27	0.16	0.63	0.22	0.06	0.17	0.53	0.26	0.12	0.20	0.84	2.65	0.74	0.26	0.37	M4 or #10
215-UB	1.00	1.44	0.20	0.19	1.06	0.43	0.20	0.20	1.28	0.49	0.10	0.28	1.78	5.50	2.25	0.81	1.25	M6 or 1/4
225-UB	1.00	1.50	0.27	0.25	–	0.49	–	0.27	1.83	0.49	0.24	0.31	2.38	6.70	2.72	1.08	1.39	M8 or 5/16
235-UB	1.63	2.25	0.33	0.37	–	0.69	0.31	0.33	2.16	0.75	0.16	0.43	2.91	10.87	4.16	1.61	2.28	M10 or 3/8

Clamping arm U-shaped
Flanged base

Application areas

The additional latch holds the clamp in the closed position.

This clamp is preferred for more difficult clamping conditions, e.g., vibrating conditions, transporting of sensitive parts, and where the clamp bar is set at an angle to the base.

Product features

Additional locking lever device for secure clamping
Rivets made of stainless steel
Zinc plated
Oil-resistant, vinyl dipped handle grip

Accessories

Horizontal clamps with a U-shaped clamping bar can be ordered in two varieties:

Standard model number: The standard adjustment spindle is included.
Model number containing "-LS": The model is delivered with two flanged washers without an adjustment spindle.

Safety instructions

To guarantee secure positive locking, the clamp must be adjusted to go into to the over-center position.

Models 225-UR, 235-UR

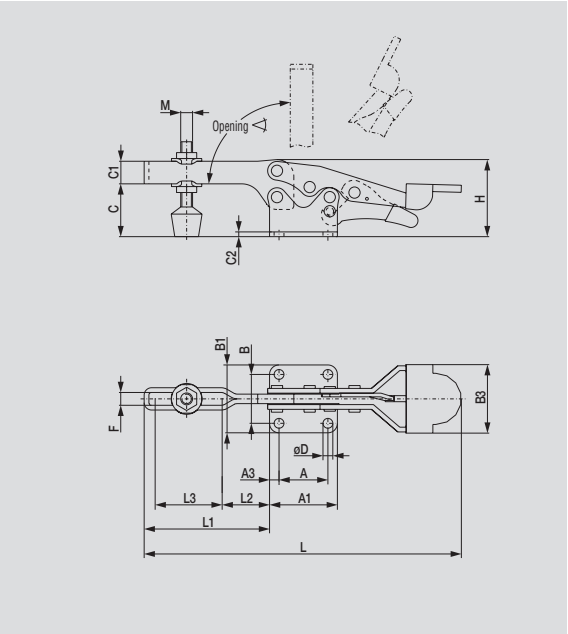

Model no.	Holding Capacity [lbs.]	Bar Opening +10°	[lbs.]	Standard equipment	Flanged Washers
225-UR	500	90°	0.69	225208-M	507107
225-UR-LS				without spindle	507107
235-UR	750	90°	1.64	240208-M	235106
235-UR-LS				without spindle	235106

See additional adjustment spindles beginning on page 9.1

U-shaped clamping bar
Flanged base
DE-STA-CO® Toggle Lock Plus

Model no.	A	A1	A3	B	B1	B3	C	C1	C2	øD	F	H	L	L1	L2	L3	M
225-UR	1.00	1.50	0.25	0.88	1.38	0.30	1.32	0.49	0.12	0.27	0.31	1.92	7.14	2.69	1.08	1.35	M8 or 5/16
235-UR	1.63	2.25	0.37	1.63	2.25	0.34	1.75	0.75	0.16	0.33	0.43	2.55	10.87	4.16	1.61	2.28	M10 or 3/8

Standard horizontal clamps

U-shaped and solid clamping bars
Flanged or straight base

Application areas

Ideal for applications in which clamping work is performed with holding capacities of up to 1,000 lbs.

Applications include assembling, drilling, testing, gluing and other processing operations. These clamps are suitable for use in welding fixtures and in gauge manufacturing as well as in the woodworking industry.

Product features

U-shaped clamping bar
Greater hand clearance between the clamping bar and handle
Rivets made of stainless steel
Zinc plated
Oil-resistant, ergonomically shaped DE-STA-CO handle grip

Accessories

Horizontal clamps with a U-shaped clamping bar can be ordered in two varieties:

Standard model number: The standard adjustment spindle is included.
Model number containing "-LS": The model is delivered with two flanged washers without an adjustment spindle. Adjusting screw for the base bar guide is not included.

Models 213-U, 217-U, 227-U, 237-U, 245-U

Model no.	Holding Capacity [lbs.]	Bar Opening +10°	[lbs.]	Standard equipment	Flanged Washers
213-U	150	90°	0 .17	213208-M	102111
213-U-LS				without spindle	102111
217-U	200	92°	0.40	202208-M	215105
217-U-LS				without spindle	215105
227-U	500	92°	0.68	225208-M	507107
227-U-LS				without spindle	507107
237-U	750	92°	1.60	240208-M	235106
237-U-LS				without spindle	235106
245-U	1,000	105°	2.90	247208-M	247109
245-U-LS				without spindle	247109

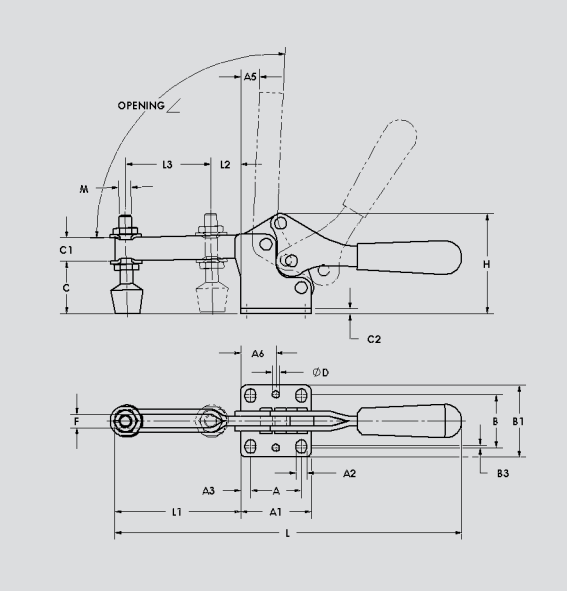

ALSO AVAILABLE		
In Stainless Steel	Model 213-USS	Page 8.8
	Model 217-USS	Page 8.8
	Model 227-USS	Page 8.8
	Model 237-USS	Page 8.8

See accessories beginning on page 9.1.

U-shaped clamping bar
Flanged base

Model no.	A	A1	A2	A3	A5	A6	B	B1	B3	C	C1	C2	øD1	F	H	L	L1	L2	L3	M
213-U	0.53	1.00	0.17	0.23	0.22	–	0.75	1.06	0.06	0.65	0.37	0.08	–	0.21	1.40	4.06	1.40	0.38	0.85	#10
217-U	1.03	1.46	0.22	0.21	0.30	0.73	1.12	1.55	0.12	0.92	0.49	0.10	0.19	0.25	1.95	7.00	2.31	0.56	1.54	1/4
227-U	1.02	1.57	0.26	0.28	0.14	0.79	1.24	1.74	0.10	1.25	0.56	0.12	0.19	0.33	2.40	7.50	2.65	0.83	1.54	5/16
237-U	1.61	2.24	0.35	0.31	0.60	1.12	1.69	2.28	0.08	1.67	0.75	0.16	0.23	0.42	3.18	11.02	4.00	0.97	2.76	3/8
245-U	1.63	2.63	0.34	0.50	1.43	–	1.62	2.62	–	2.19	1.00	0.19	–	0.53	4.25	12.25	4.88	1.37	3.20	1/4

Models 213-UB, 217-UB, 227-UB, 237-UB

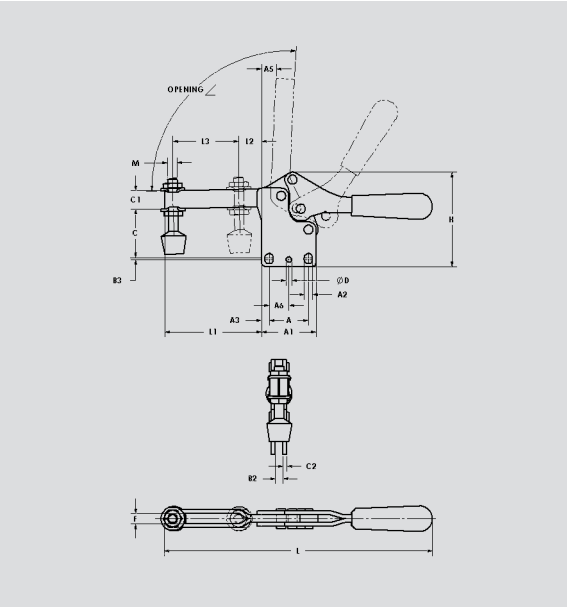

Model no.	Holding Capacity [lbs.]	Bar Opening +10°	[lbs.]	Standard equipment	Flanged Washers
213-UB	150	90°	0.17	213208-M	102111
213-UB-LS				without spindle	102111
217-UB	200	92°	0.40	202208-M	215105
217-UB-LS				without spindle	215105
227-UB	500	92°	0.68	225208-M	507107
227-UB-LS				without spindle	507107
237-UB	750	92°	1.60	240208-M	235106
237-UB-LS				without spindle	235106

See additional adjustment spindles beginning on page 9.1

U-shaped clamping bar
Straight base

Model no.	A	A1	A2	A3	A5	A6	B2	B3	C	C1	C2	øD1	F	H	L	L1	L2	L3	M
213-UB	0.53	1.00	0.17	0.23	0.22	–	0.16	0.06	0.77	0.37	0.08	–	0.21	1.73	4.06	1.43	0.38	0.85	#10
217-UB	1.03	1.46	0.22	0.21	0.30	0.73	0.20	0.12	1.11	0.49	0.10	0.19	0.25	2.47	7.00	2.31	0.56	1.54	1/4
227-UB	1.02	1.57	0.26	0.28	0.14	0.79	0.24	0.10	1.45	0.56	0.12	0.19	0.33	2.96	7.50	2.65	0.83	1.54	5/16
237-UB	1.61	2.24	0.35	0.31	0.60	1.12	0.31	0.08	2.00	0.75	0.16	0.23	0.42	3.89	11.02	4.00	0.97	2.76	3/8

Available upon request

Compact clamps

Clamping arm U-shaped
Flanged base

Application areas

This clamp range is distinguished by its very compact design. It is especially suitable for use in very confined space.

Application examples include all areas in which clamping work is performed with holding capacities of up to 750 lbs., including gluing, soldering, clamping of materials, assembling, drilling, testing, positioning and other processing operations.

Product features

Rivets made of stainless steel
Zinc plated
Oil-resistant, vinyl dipped handle grip

Accessories

Horizontal clamps with a U-shaped clamping bar can be ordered in two varieties:

Standard model number: The standard adjustment spindle is included.

Model number containing "-LS": The model is delivered with two flange washers without an adjustment spindle.

Models 305-U, 307-U, 309-U

Model no.	Holding Capacity [lbs.]	Bar Opening +10°	[lbs.]	Standard equipment	Flanged Washers
305-U	150	92°	0.13	305208-M	102111
305-U-LS				without spindle	102111
307-U	350	92°	0.54	307208-M	507107
307-U-LS				without spindle	507107
309-U	750	92°	1.30	309208	235106
309-U-LS				without spindle	235106

ALSO AVAILABLE		
In Stainless Steel	Model 305-USS	Page 8.9
	Model 307-USS	Page 8.9
	Model 309-USS	Page 8.9
As DE-STA-CO® Toggle Lock Plus	Model 305-UR	Page 3.18
	Model 307-UR	Page 3.18
	Model 309-UR	Page 3.18
See accessories beginning on page 9.1.		

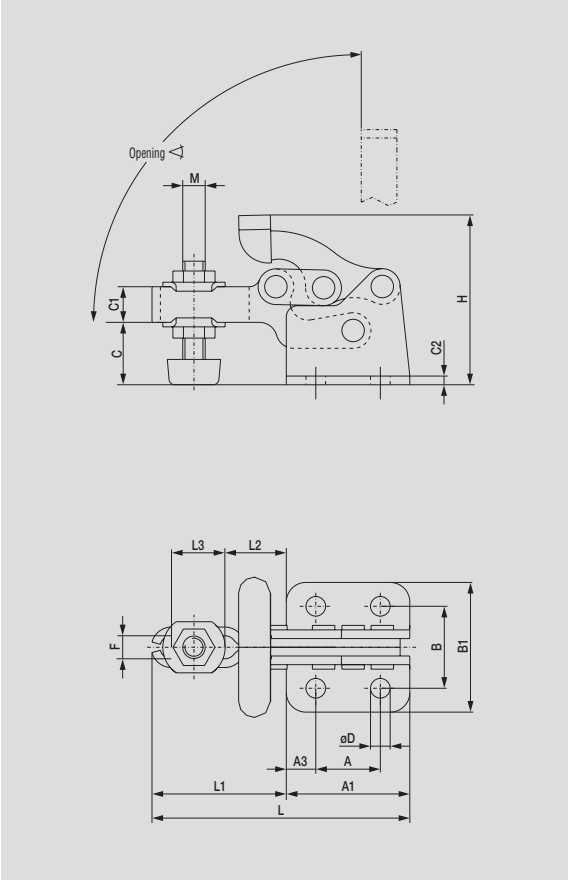

U-shaped clamping bar
Flanged base

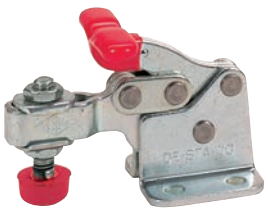

Model no.	A	A1	A3	B	B1	C	C1	C2	øD	F	H	L	L1	L2	L3	M
305-U	0.53	1.02	0.25	0.63	1.00	0.48	0.31	0.08	0.18	0.21	1.43	2.21	1.19	0.51	0.50	M5 or #10
307-U	0.91	1.72	0.40	1.14	1.80	0.89	0.50	0.12	0.28	0.33	2.36	3.61	1.89	0.86	0.75	M8 or 5/16
309-U	1.38	2.52	0.58	1.50	2.47	1.31	0.75	0.12	0.33	0.41	3.53	5.19	2.68	1.28	1.06	3/8-16

Compact clamps with DE-STA-CO® Toggle Lock Plus

NEW

Clamping arm U-shaped
Flanged base

Application areas

DE-STA-CO introduces our newest family of DE-STA-CO® Toggle Lock Plus clamps, featuring a compact locking release lever, which locks in the clamped position only. All models provided with red vinyl handle grip and flanged washers. Models 305-UR, 307-UR and 309-UR are supplied with neoprene-tipped spindle assemblies.

Product features

Rivets made of stainless steel
Zinc plated
Oil-resistant, vinyl dipped handle grip

Models 305-UR, 307-UR, 309-UR

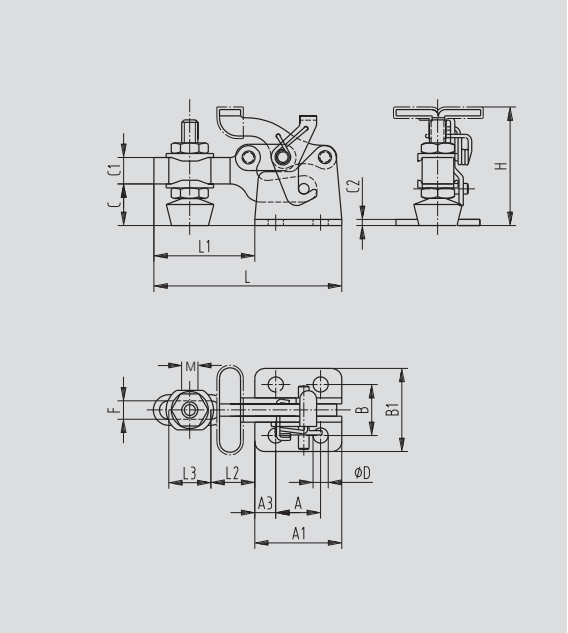

Model no.	Holding Capacity [lbs.]	Bar Opening +10°	[lbs.]	Standard equipment	Flanged Washers
305-UR	150	92°	0.13	305208-M	102111
305-U-LS				without spindle	102111
307-UR	350	92°	0.54	307208-M	507107
307-U-LS				without spindle	507107
309-UR	750	92°	1.30	309208	235106
309-U-LS				without spindle	235106
See additional adjustment spindles beginning on page 9.1.					

U-shaped clamping bar
Flanged base
DE-STA-CO® Toggle Lock Plus

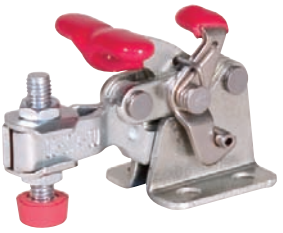

Model no.	A	A1	A3	B	B1	C	C1	C2	øD	F	H	L	L1	L2	L3	M
305-UR	0.53	1.02	0.25	0.63	1.00	0.48	0.31	0.08	0.18	0.21	1.43	2.21	1.19	0.51	0.50	M5 or #10
307-UR	0.91	1.72	0.40	1.14	1.80	0.89	0.50	0.12	0.28	0.33	2.36	3.61	1.89	0.86	0.75	M8 or 5/16
309-UR	1.38	2.52	0.58	1.50	2.47	1.31	0.75	0.12	0.33	0.41	3.53	5.19	2.68	1.28	1.06	3/8-16

Models 515, 515-B

Model no.	Holding Capacity [lbs.]	Bar Opening +10°	[lbs.]	Standard equipment
515	800	86°	1.07	None
515-B	800	86°	1.75	None

Solid bar

Block mounting base

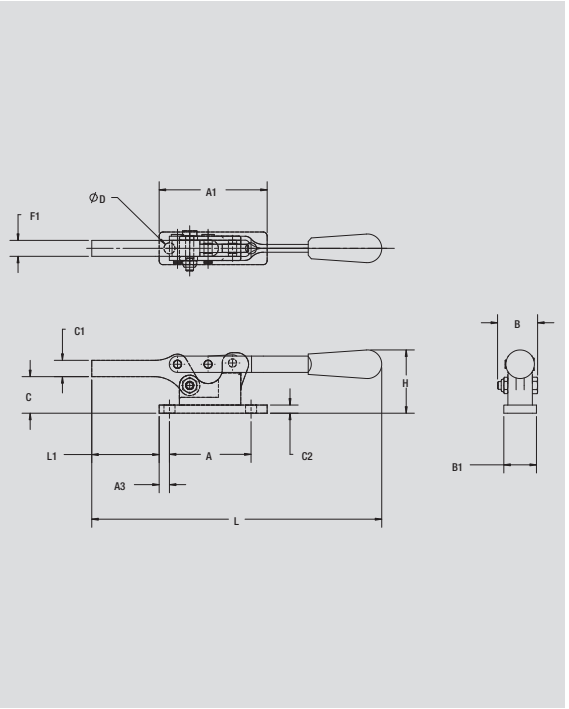

Model 515

Model 515-B

Model no.	A	A1	A3	B	B1	C	C1	C2	øD	F1	H	L	L1					
515	–	1.88	–	1.23	0.75	0.87	0.50	–	–	0.49	1.69	8.88	2.69					
515-B	2.50	3.31	0.31	1.23	1.00	1.12	0.50	0.25	0.34	0.49	1.94	8.88	2.06					

NEW

Models 6001-M and 6001-MSS:

Model 6001 is a heavier duty version of Model 601 and has 50% greater holding capacity. It has a more flexible mounting base to enable side-mounting the clamp.

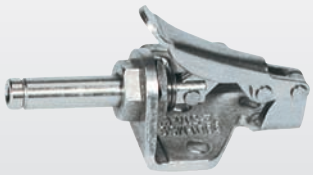

page 4.4

NEW

Models 95030, 95040, 95050, 95060:
Low profile plunger clamps

These new low-profile plunger clamps can be used when over-head clearance is a problem. The large holding capacities for these clamps are packaged in a small compact design.

page 4.21

NEW

Models 6015-M and 6015-MR: Compact and robust

Model 6015-M is the smallest of the straight-line, machined-cast base clamps. Its compact size allows it to be used in confined areas and on small fixtures. Handles are red vinyl dipped for greater operator comfort.

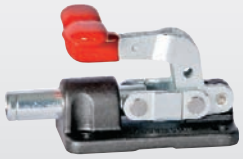

page 4.9, 4.10

NEW

Model 603-MR: With additional safety lock

The patented design locks the release lever into the forged steel base to prevent accidental opening. The 603-MR is well adapted for use in confined areas because of its small package size and low height.

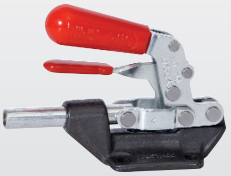

page 4.12

Product group - straight-line action clamps

Application areas

Ideal for clamping during soldering, gluing, locking, assembling, drilling, testing, positioning and much more. The straight-line action clamp range are distinguished by their compact design many versions lock in both the extended and retracted positions. They can withstand relatively high stresses.

The essential product features

The handle is easy to operate and moves the plunger of the clamp in an out along its axis

Most versions lock in the extended and retracted positions

Clamps can be mounted through drilled holes in the fixture, or using the flanged or straight mounting base

Model 604-MM in a robot-type welding fixture

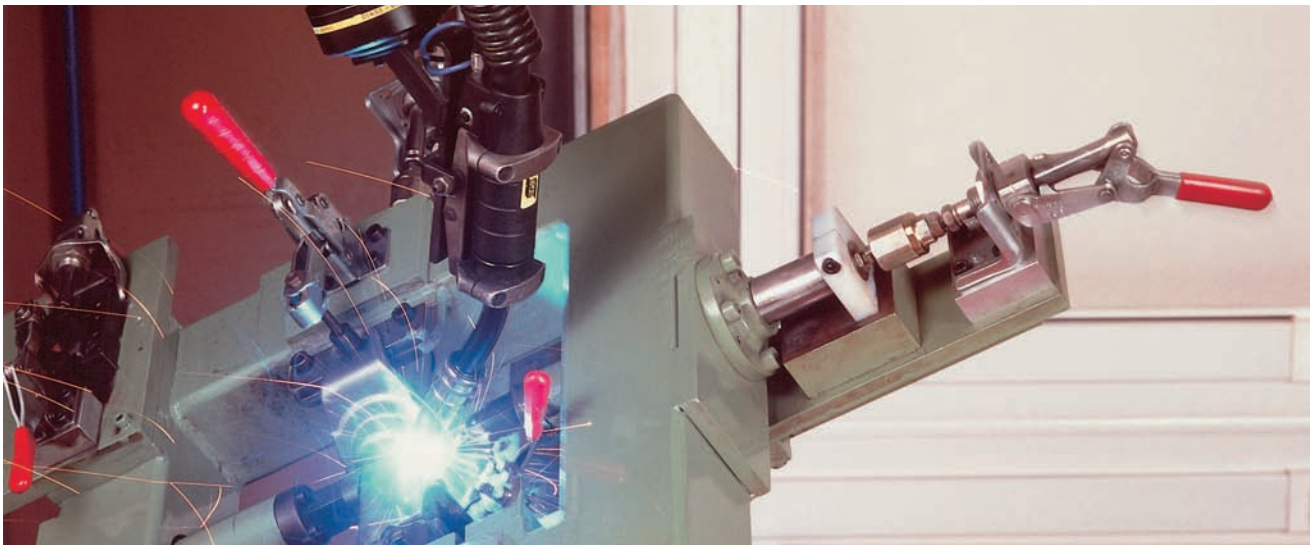

	Model no.	Holding Capacity max. [lbs.]	Category	Page
	6001-M	150	Standard	4.4
	601 601-M 601-O	100 100 100	Standard Standard Standard	4.5
	602 602-MM 604 604-MM 624 624-MM	200 200 300 300 700 700	Threaded-body Threaded-body Threaded-body Threaded-body Threaded-body Threaded-body	4.6
	6004 6004-M	450 450	Threaded-body Threaded-body	4.7

	Model no.	Holding Capacity max. [lbs.]	Category	Page
	6015-M	580	Standard	4.9
	6015-MR	560	DE-STA-CO® Toggle Lock Plus	4.10
	603 603-M 608	600 600 600	Standard Standard Standard	4.11
	605 605-M	300 300	Standard Standard	4.11

	Model no.	Holding Capacity max. [lbs.]	Category	Page
	603-R 603-MR	600 600	DE-STA-CO® Toggle Lock Plus DE-STA-CO® Toggle Lock Plus	4.12
	606 606-M	450 450	Standard Standard	4.13
	607 607-M 607-SQ 607-SQM	800 800 800 800	Standard Standard Standard Standard	4.14
	609 609-B	300 300	Standard Standard	4.15
	610 610-M	800 800 800	Standard Standard Standard	4.16
	615	300	Standard	4.16
	614-M	1,200	Standard	4.17
	617	2,000	Standard	4.18

	Model no.	Holding Capacity max. [lbs.]	Category	Page
	620 620-M 628	600 600 600	Standard Standard Standard	4.18
	630 630-M 640 640-M	2,500 2,500 2,500 2,500	Standard Standard Standard Standard	4.19
	630-R 630-MR	2,500 2,500	DE-STA-CO® Toggle Lock Plus DE-STA-CO® Toggle Lock Plus	4.19
	650 650-M	16,000 16,000	Standard Standard	4.20
	95030 95040 95050 95060	550 1,100 1,650 3,965	Standard Standard Standard Standard	4.21
	670-1MB 670-1MBPLS 675-1MB 675-1MBPLS 690-MB 690-1MBPLS 695-MB 695-1MBPLS	2,400 2,400 2,400 2,400 5,000 5,000 5,000 5,000	Heavy-duty Heavy-duty Heavy-duty Heavy-duty Heavy-duty Heavy-duty Heavy-duty Heavy-duty	4.22
	SL3	150	Heavy-duty	4.24

Standard straight-line action clamps

NEW

Application areas

Model 6001-M is a heavier duty version of Model 601 and has 50% greater holding capacity. It is manufactured from heavy gauge material and has a more flexible mounting base to enable side-mounting the clamp.

Product features

- Plunger with internal thread
- Rivets made of stainless steel
- Zinc plated and passivated
- Oil-resistant, vinyl dipped handle grip

Model 6001-M

Model no.	Holding Capacity [lbs.]	Plunger Travel	[lbs.]	Recommendation (not supplied)	Plunger Thread (M)
6001-M	150	0.63	0.12	205208-M	M4

ALSO AVAILABLE		
In Stainless Steel	Model 6001-MSS	Page 8.11
See accessories beginning on page 9.1.		

Model locks in both the extended and retracted positions.
Allow handle to fall below plane level to lock in retracted position.

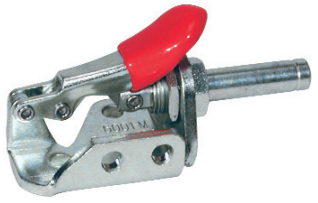

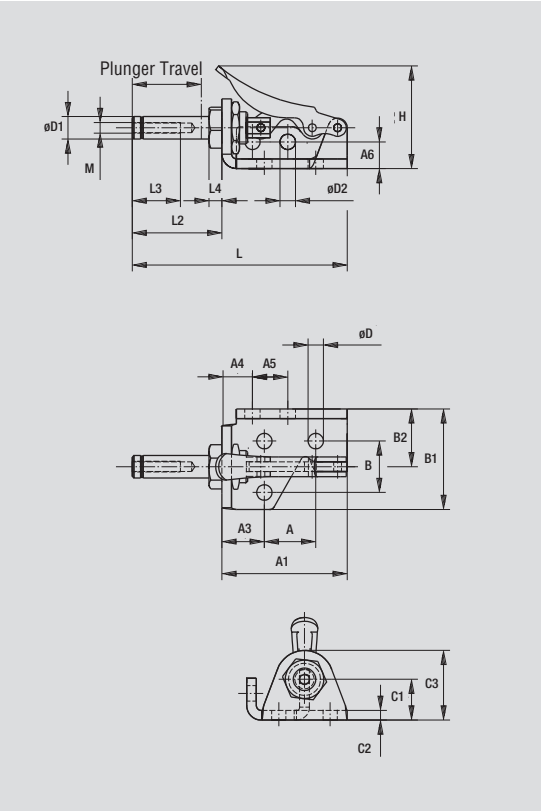

Model no.	A	A1	A3	A4	A5	A6	B	B1	B2	C1	C2	C3	øD	øD1	øD2	H	L	L2	L3	L4
6001-M	0.63	1.54	0.52	0.37	0.43	0.33	0.63	1.23	0.71	0.50	0.12	0.85	0.19	0.28	0.19	1.30	2.63	1.10	0.59	0.16

NEW

Application areas

Ideal for all applications in which work is performed with holding capacities of up to 100 lbs., including gluing, soldering, assembling, drilling, testing, positioning and other processing operations.

Product features

Flanged mounting base
Plunger with internal thread
Rivets made of stainless steel
Zinc plated
Oil-resistant, vinyl dipped handle grip

Accessories

Straight-line action clamps are normally delivered without adjustment spindles. Recommendations are provided. Whenever required, the spindle can be purchased as an accessory part.

Models 601, 601-M, 601-0

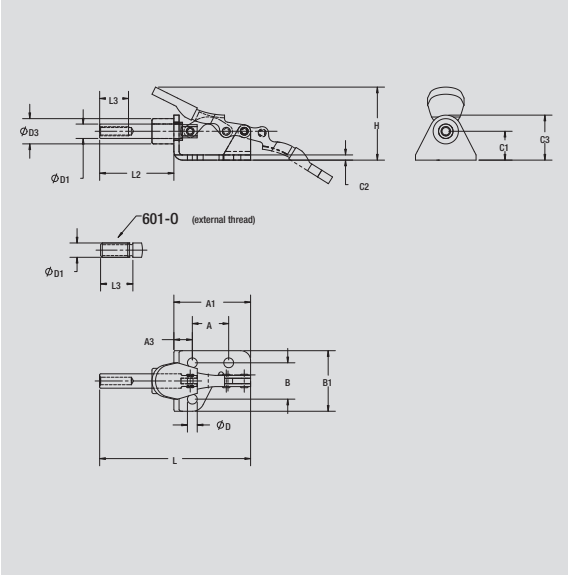

Model no.	Holding Capacity [lbs.]	Plunger Travel	[lbs.]	Recommendation (not supplied)	Plunger Thread (M)
601	100	0.63	0.09	105203 (supplied)	8-32
601-M	100	0.63	0.09	205208-M	M4
601-0	100	0.63	0.13	–	1/4-20

ALSO AVAILABLE		
As Air/Hydraulic	Model 816	Page 11.18
In Stainless Steel	Models 601-0SS, 601-SS,	Page 8.10
See accessories beginning on page 9.1.		

Models lock in both the extended and retracted positions.
Allow handle to fall below plane level to lock in retracted position.

Model 601-0

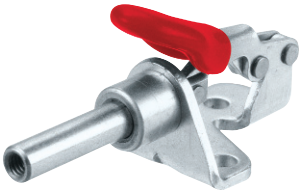

Model 601

Model no.	A	A1	A3	B	B1	C1	C2	C3	øD	øD1	øD3	H	L	L2	L3
601	0.63	1.33	0.32	0.63	1.05	0.50	0.09	0.78	0.17	0.25	0.44	1.27	2.62	1.29	0.50
601-M	0.63	1.33	0.32	0.63	1.05	0.50	0.09	0.78	0.17	0.25	0.44	1.27	2.62	1.29	0.50
601-0	0.63	1.33	0.32	0.63	1.05	0.50	0.09	0.78	0.17	0.25	–	1.27	2.86	1.53	0.56

Threaded-body straight-line action clamps

Application areas

Ideal for all applications in which work is performed with holding capacities of up to 700 lbs., including gluing, soldering, assembling, drilling, testing, positioning, also locking of containers and other processing operations.

This series is distinguished by its compact design. The single hole threaded mount permits rotation in any direction, allowing complete flexibility in the fixture.

Product features

Threaded body for direct installation in mounting plates and fixtures

Plunger with internal thread

Rivets made of stainless steel

Zinc plated

Oil-resistant, ergonomically shaped DE-STA-CO handle grip

Accessories

This series is delivered with a mounting jam nut as standard. Adjustment spindles can be ordered as an accessory part. You will find the matching mounting plate in the table on of this page. Please specify the corresponding model number with your order.

Models 602, 602-MM, 604, 604-MM, 624, 624-MM

Model no.	Holding Capacity [lbs.]	Plunger Travel	[lbs.]	Recommendation (not supplied)	Plunger Thread (M)	Mounting Plate Accessories	Mounting Nut Standard Equipment
602	200	0.75	0.25	205203	1/4-20	–	602105
602-MM	200	0.75	0.25	205203-M	M6	602106-M	602105-M
604	300	1.50	0.44	207203	5/16-18	604106	606104
604-MM	300	1.50	0.44	207203-M	M8	604106-M	606104-M
624	700	2.63	1.63	210203	3/8-16	624108	624105
624-MM	700	2.63	1.63	210203-M	M10	624106-M	624105-M

ALSO AVAILABLE		
In Stainless Steel	Models 602-SS, 604-SS	Page 8.12
	Model 624-SS	Page 8.12

See accessories beginning on page 9.1.

Models lock in both the extended and retracted positions.

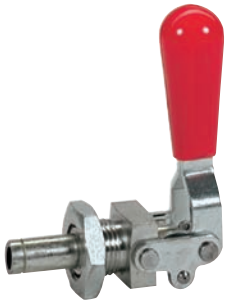

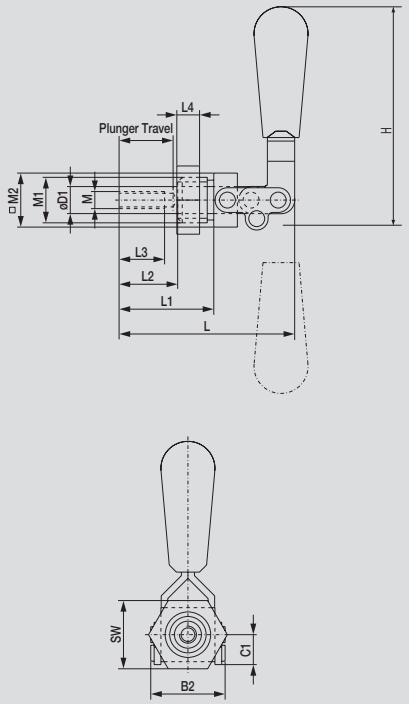

Model no.	B2	C1	øD1	H	L	L1	L2	L3	L4	M1	M2	SW
602	1.03	0.88	0.37	3.13	2.62	1.31	0.97	0.63	0.25	5/8-18	0.75	0.44
602-MM	1.03	0.88	0.37	3.13	2.62	1.31	0.97	0.63	0.25	M16x1.5	0.75	24mm
604	1.30	0.50	0.44	4.16	4.95	2.18	1.82	1.00	0.25	3/4-16	0.88	1.00
604-MM	1.30	0.50	0.44	4.16	4.95	2.18	1.82	1.00	0.25	M20x1.5	0.88	30mm
624	1.81	0.75	0.62	5.60	6.68	3.62	3.24	1.25	0.25	1-14	1.25	1.50
624-MM	1.81	0.75	0.62	5.60	6.68	3.62	3.24	1.25	0.25	M27x2	1.25	41mm

Model no.	Holding Capacity [lbs.]	Plunger Travel	[lbs.]	Recommendation (not supplied)	Plunger Thread (M)	Mounting Plate Accessories	Mounting Nut Standard Equipment
6004	450	1.50	0.81	207203	5/16-18	604106	606104
6004-MM	450	1.50	0.81	207203-M	M8	604106-M	606104-M
See additional adjustment spindles beginning on page 9.1.							

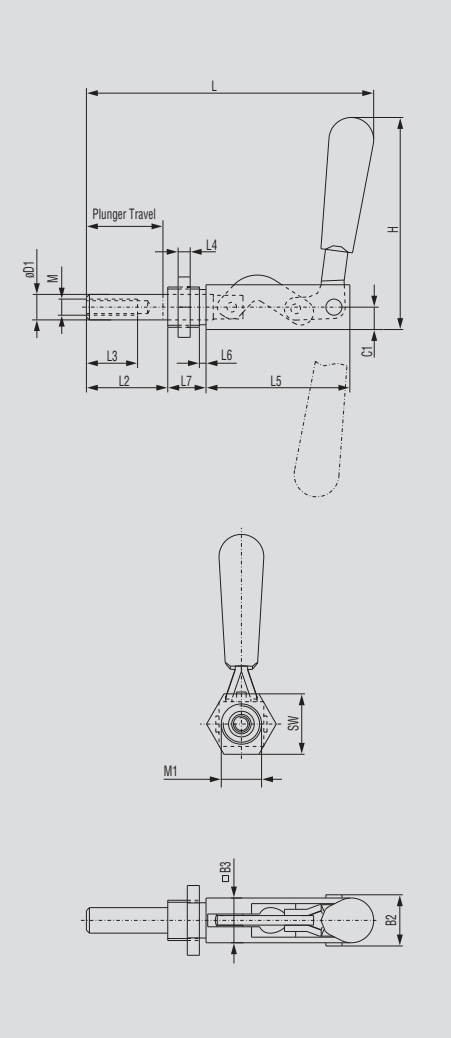

Models locks in both the extended and retracted positions.

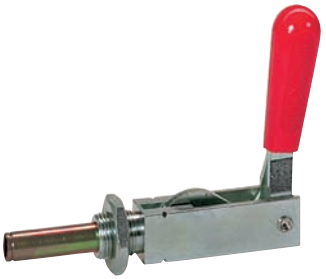

Model no.	B2	B3	C1	øD1	H	L	L2	L3	L4	L5	L6	L7	M1	SW
6004	1.00	0.88	0.44	0.50	4.18	5.78	1.59	1.00	0.25	2.81	0.13	0.75	0.75	1.00
6004-MM	1.00	0.88	0.44	0.50	4.18	5.78	1.59	1.00	0.25	2.81	0.13	0.75	0.75	30mm

Mounting plate for series

602, 604, 624, 6004

For model **602-MM**
Order no.: 602106-M

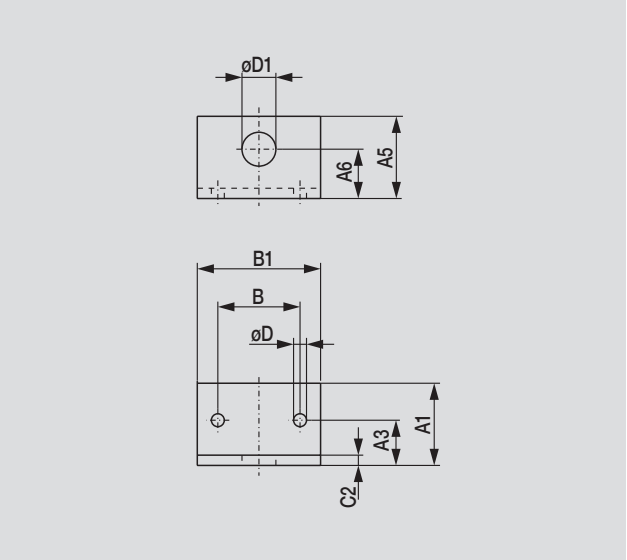

For model **604-MM, 6004-MM**
Order no.: 604106-M

For model **604**
Order no.: 604106

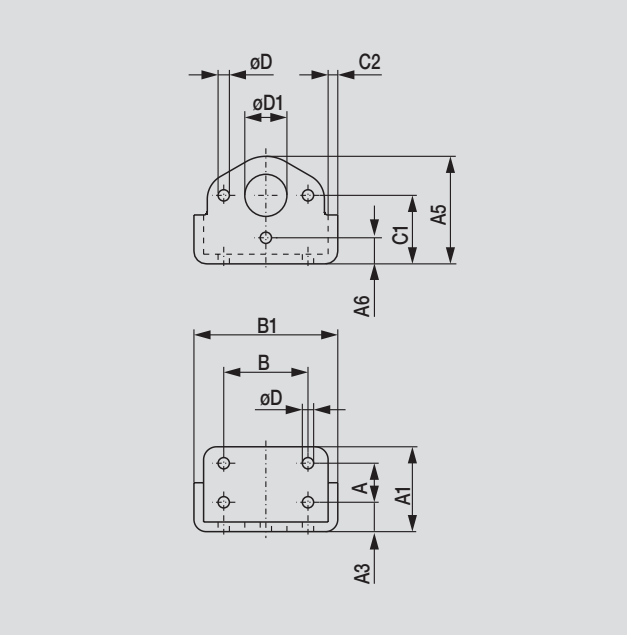

For model **624-MM**
Order no.: 624106-M

For model **624**
Order no.: 624108

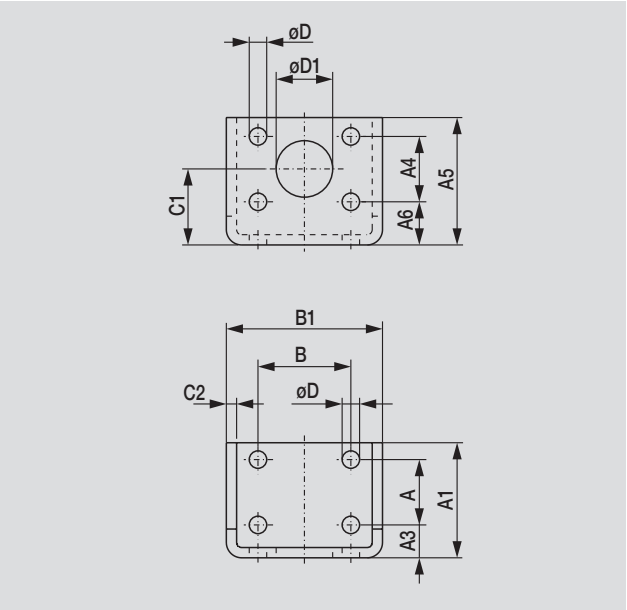

Order no.	For Model no.	A	A1	A3	A4	A5	A6	B	B1	C1	C2	øD	øD1
602106-M	602-MM	–	1.57	0.87	–	1.57	–	1.57	2.36	0.94	0.20	0.26	0.65
604106	604	0.75	1.60	0.57	–	2.07	0.49	1.62	2.80	1.30	0.18	0.22	0.75
604106-M	604-MM, 6004-MM	0.75	1.60	0.57	–	2.07	0.49	1.62	2.80	1.30	0.18	0.22	0.75
624108	624	0.88	1.50	–	–	–	–	2.31	3.00	0.75	0.25	0.28	1-14
624106-M	624-MM	1.26	2.20	0.63	1.26	2.44	0.83	1.77	3.00	1.46	0.20	0.33	1.08

Available upon request

NEW

Application areas

Model 6015-M is the smallest of the straight-line, machined-cast base clamps. Its compact size allows it to be used in confined areas and on small fixtures. The plunger is threaded to accept any M6 clamping spindle. Handles are red vinyl dipped for greater operator comfort.

Product features

- Plunger with internal thread
- Rivets made of stainless steel
- Casted base, black-oxide finish
- Other parts zinc plated
- Oil-resistant, vinyl dipped handle grip

Model 6015-M

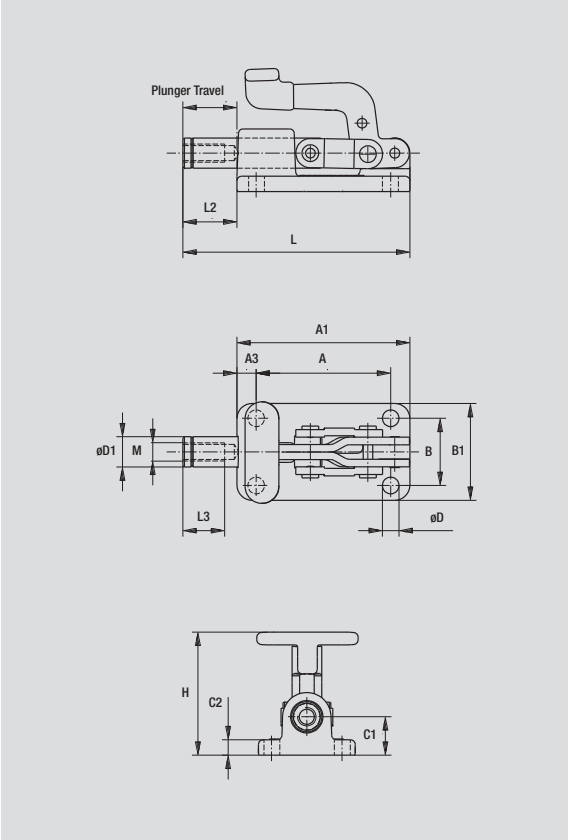

Model no.	Holding Capacity [lbs.]	Plunger Travel	[lbs.]	Recommendation (not supplied)	Plunger Thread (M)
6015-M	580	0.70	0.34	205203-M	M6

ALSO AVAILABLE		
As DE-STA-CO® Toggle Lock Plus	Model 6015-M-R	Page 4.9
As Stainless Steel	Model 6015-M-SS	Page 8.13
See accessories beginning on page 9.1.		

Model locks in both the extended and retracted positions.
Allow handle to fall below plane level to lock in retracted position.

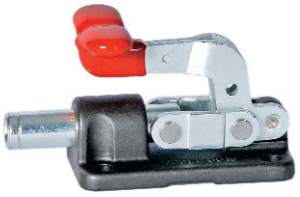

Model no.	A	A1	A3	B	B1	C1	C2	øD	øD1	H	L	L2	L3
6015-M	1.75	2.25	0.25	0.88	1.25	0.50	0.20	0.22	0.38	1.60	2.95	0.70	0.75

Standard straight-line action clamps

NEW

Application areas

Model 6015-M-R is another new addition to our line of DE-STA-CO® Toggle Lock Plus clamps. Its compact size allows use in confined areas and on small fixtures where safety is a concern.

Product features

Plunger with internal thread
Rivets made of stainless steel
Casted base, black-oxide finish
Other parts zinc plated

Model 6015-MR

Model no.	Holding Capacity [lbs.]	Plunger Travel	[lbs.]	Recommendation (not supplied)	Plunger Thread (M)
6015-MR	560	0.70	0.34	205203-M	M6

ALSO AVAILABLE

See accessories beginning on page 9.1.

DE-STA-CO® Toggle Lock Plus Model locks in both the extended and retracted positions, but the release lever only engages in the extended position.
Allow handle to fall below plane level to lock in retracted position.

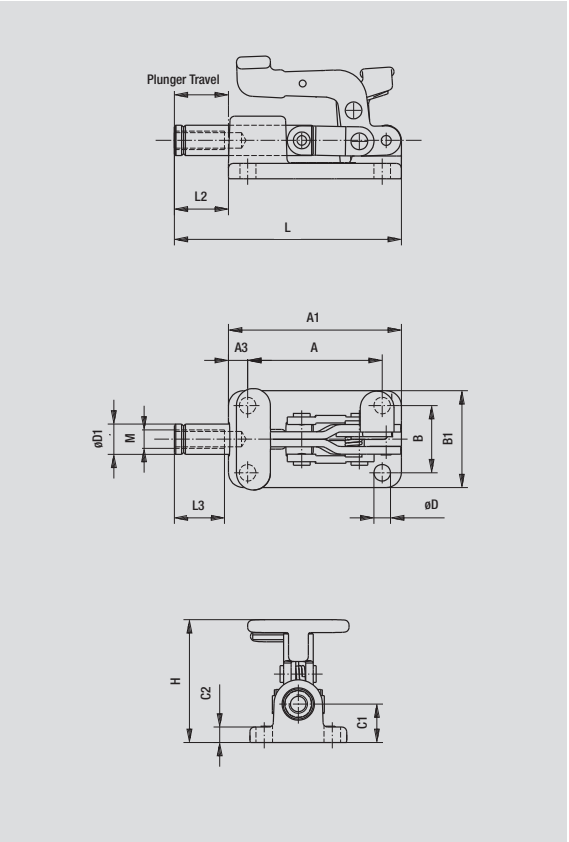

Model no.	A	A1	A3	B	B1	C1	C2	øD	øD1	H	L	L2	L3
6015-MR	1.75	2.25	0.25	0.88	1.25	0.50	0.20	0.22	0.38	1.60	2.95	0.70	0.75

Models 603, 603-M, 608

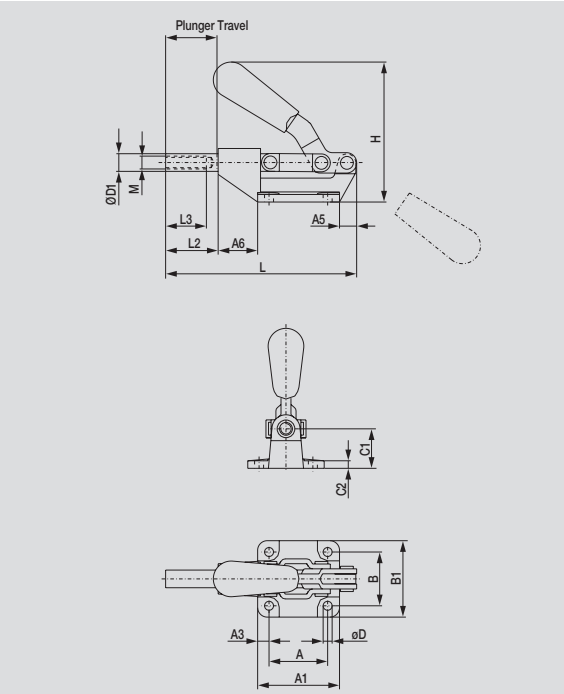

Model no.	Holding Capacity ⬅➡ [lbs.]	Plunger Travel	⚖ [lbs.]	Recommendation (not supplied)	Plunger Thread (M)
603	600	1.25	0.83	207203	5/16-18
603-M	600	1.25	0.83	207203-M	M8
608	850	1.63	1.25	210203	3/8-16

ALSO AVAILABLE		
As Air/Hydraulic	Model 803	Page 11.17
In DE-STA-CO® Toggle Lock Plus	Model 603-R	Page 4.11
In Stainless Steel	Model 603-SS	Page 8.12
See accessories beginning on page 9.1.		

Models lock in both the extended and retracted positions.
Allow handle to fall below plane level to lock in retracted position.

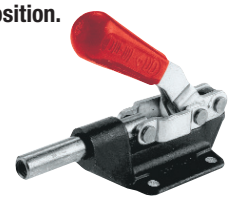

Model 603

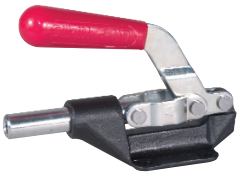

Model 608

Model no.	A	A1	A3	A5	A6	B	B1	C1	C2	øD	øD1	H	L	L2	L3
603	1.44	2.00	0.28	0.58	0.94	1.31	1.88	0.97	0.19	0.27	0.44	3.43	4.73	1.22	1.00
603-M	1.44	2.01	0.28	0.62	0.88	1.31	1.89	0.96	0.18	0.26	0.44	3.43	4.80	1.30	1.00
608	1.63	2.25	0.31	0.75	1.40	1.63	2.25	1.25	0.19	0.33	0.62	4.12	6.00	1.60	1.25

Available upon request

Models 605, 605-M

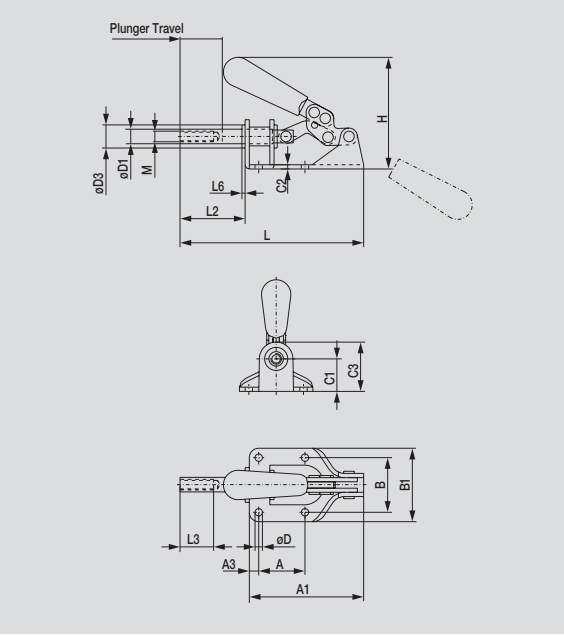

Model no.	Holding Capacity ⬅➡ [lbs.]	Plunger Travel	⚖ [lbs.]	Recommendation (not supplied)	Plunger Thread (M)
605	300	1.25	0.69	207203	5/16-18
605-M	300	1.25	0.69	207203-M	M8

See additional adjustment spindles beginning on page 9.1.

Model locks in both the extended and retracted positions.
Allow handle to fall below plane level to lock in retracted position.

Model no.	A	A1	A3	B	B1	C1	C2	C3	øD	øD1	øD3	H	L	L2	L3	L6
605	1.38	3.41	0.28	1.63	2.19	0.97	0.12	1.47	0.22	0.44	0.75	3.44	5.48	1.94	1.00	0.10
605-M	1.38	3.41	0.28	1.63	2.19	0.97	0.13	1.47	0.22	0.44	0.69	3.44	5.47	1.94	1.00	0.09

Available upon request

Standard straight-line action clamps

NEW

Application areas

Patented DE-STA-CO® Toggle Lock Plus design locks the release lever into the forged steel base to prevent accidental opening. The 603-R is well adapted for use in confined areas because of its small package size and low height. The ergonomic handle is slanted forward to provide an adequate grip and yet enhance the low silhouette. Clamp locks in both the extended and retracted positions while the release lever secures the clamp in the extended position only.

Product features

- Plunger with internal thread
- Rivets made of stainless steel
- Forged steel base, black-oxide finish
- Other parts zinc plated and passivated
- Oil-resistant, ergonomically shaped DE-STA-CO handle grip

Models 603-R, 603-MR

Model no.	Holding Capacity [lbs.]	Plunger Travel	[lbs.]	Recommendation (not supplied)	Plunger Thread (M)
603-R	600	1.25	0.83	207203	5/16-18
603-MR	600	1.25	0.83	207203-M	M8

See additional adjustment spindles beginning on page 9.1.

DE-STA-CO® Toggle Lock Plus
Allow handle to fall below plane level to lock in retracted position.

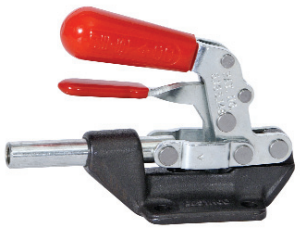

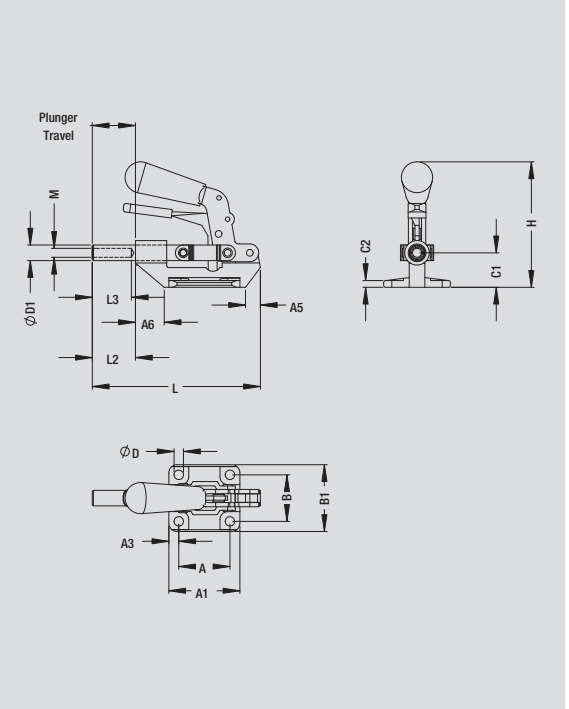

Model no.	A	A1	A3	A5	A6	B	B1	C1	C2	øD	øD1	H	L	L2	L3
603-R	1.44	2.00	0.28	0.58	0.94	1.31	1.88	0.97	0.19	0.27	0.44	3.43	4.73	1.22	1.00
603-MR	1.44	2.01	0.28	0.62	0.88	1.31	1.89	0.96	0.18	0.26	0.44	3.43	4.80	1.30	1.00

Available upon request

Application areas

Ideal for all applications in which work is performed with holding capacities of up to 450 lbs., including gluing, soldering, assembling, drilling, testing, positioning and other processing operations.

Due to the flexible design of the plunger and the variable method of rotating the handle position, complete flexibility in the fixture design is possible.

Product features

Rivets made of stainless steel
Zinc plated
Oil-resistant, vinyl dipped handle grip

Accessories

Straight-line action clamps are normally delivered without adjustment spindles. Recommendations are provided. Whenever required, the spindle can be purchased as an accessory part.

Models 606, 606-M

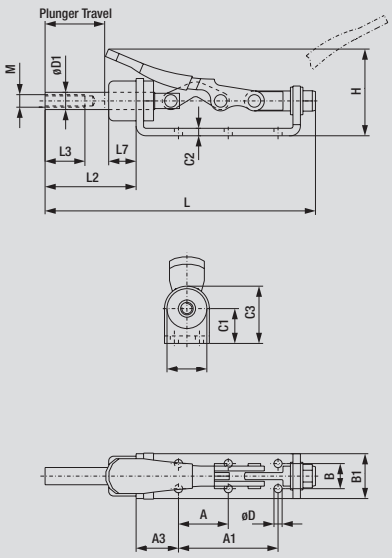

Model no.	Holding Capacity [lbs.]	Plunger Travel	[lbs.]	Recommendation (not supplied)	Plunger Thread (M)
606	450	1.57	0.81	207203	5/16-18
606-M	450	1.57	0.81	207203-M	M8

See additional adjustment spindles beginning on page 9.1.

Handle and plunger can be rotated in radial direction for vertical or horizontal handle action.
Models lock in only the extended position.

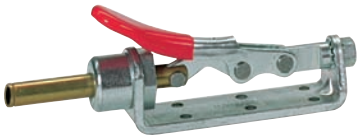

Model no.	A	A1	A3	B	B1	C1	C2	C3	øD	øD1	H	L	L2	L3	L7
606	1.25	2.50	1.07	0.63	1.13	0.88	0.19	1.45	0.20	0.44	2.47	6.72	2.26	1.00	0.69
606-M	1.25	2.50	1.07	0.63	1.13	0.88	0.19	1.45	0.20	0.44	2.47	6.72	2.26	1.00	0.69

Available upon request

Standard straight-line action clamps

Application areas

Ideal for all applications in which work is performed with holding capacities of up to 800 lbs., including assembling, drilling, testing, positioning and other processing operations.

Product features

- Low-profile plunger
- Round or square plunger with internal thread
- Forged steel base, black-oxide finish
- Rivets made of stainless steel
- Zinc plated linkage
- Oil-resistant, ergonomically shaped DE-STA-CO handle grip

Accessories

Straight-line action clamps are normally delivered without adjustment spindles. Recommendations are provided. Whenever required, the spindle can be purchased as an accessory part.

Models 607, 607-M, 607-SQ, 607-SQM

Model no.	Holding Capacity [lbs.]	Plunger Travel	[lbs.]	Recommendation (not supplied)	Plunger Thread (M)
607	800	1.63	1.63	207203	5/16-18
607-M	800	1.63	1.63	207203-M	M8
607-SQ	800	1.63	1.63	207203	5/16-18
607-SQM	800	1.63	1.63	207203-M	M8

See additional adjustment spindles beginning on page 9.1.

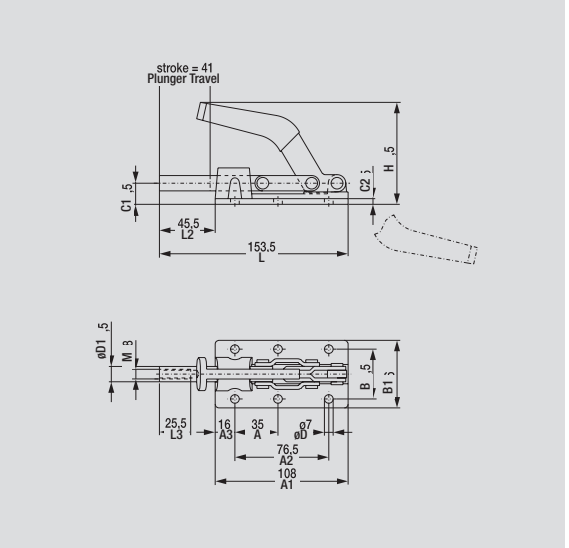

Models lock in both the extended and retracted positions.
Allow handle to fall below plane level to lock in retracted position.

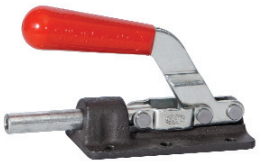

Model 607

Model 607-SQ

Feature

With square plunger for accurate locating

Model no.	A	A1	A2	A3	B	B1	C1	C2	øD	øD1	H	L	L2	L3
607	1.38	4.25	3.01	0.63	1.63	2.19	0.69	0.19	0.28	0.50	3.56	6.01	1.76	1.00
607-M	1.38	4.25	3.01	0.63	1.63	2.19	0.69	0.19	0.28	0.50	3.56	6.01	1.76	1.00
607-SQ	1.38	4.25	3.01	0.63	1.63	2.19	0.69	0.19	0.28	0.50	3.56	6.01	1.76	1.00
607-SQM	1.38	4.25	3.01	0.63	1.63	2.19	0.69	0.19	0.28	0.50	3.56	6.01	1.76	1.00

Available upon request

Application areas

Ideal for all applications in which work is performed with holding capacities of up to 800 lbs., including assembling, drilling, testing, po si tioning and other processing operations.

Product features

- Rivets made of stainless steel
- Zinc plated linkage
- Oil-resistant, ergonomically shaped DE-STA-CO handle grip
- Straight and flanged base

Accessories

Straight-line action clamps are normally delivered without adjustment spindles. Recommendations are provided. Whenever required, the spindle can be purchased as an accessory part.

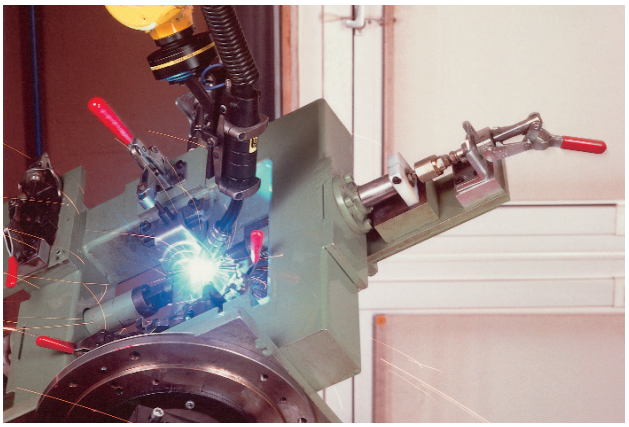

Models 609, 609-B

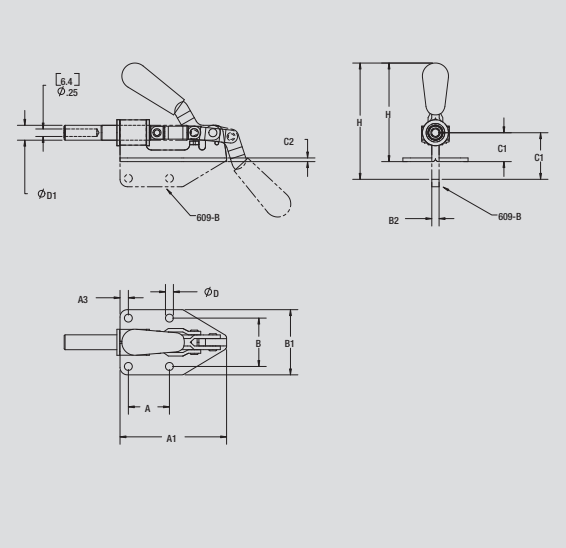

Model no.	Holding Capacity [lbs.]	Plunger Travel	[lbs.]	Recommendation (not supplied)	Plunger Thread (M)
609	300	1.25	0.88	207203	5/16-18
609-B	300	1.25	0.88	207203	5/16-18

See additional adjustment spindles beginning on page 9.1.

Models lock in both the extended and retracted positions.
Allow handle to fall below plane level to lock in retracted position.

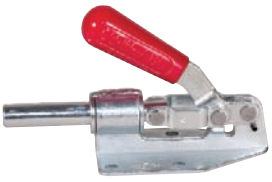

Model 609

Model 609-B

Model no.	A	A1	A3	B	B1	B2	C1	C2	øD	øD1	H
609	1.38	3.58	0.28	1.62	2.19	–	0.97	0.12	0.27	0.44	3.29
609-B	1.38	3.58	0.28	0.24	–	0.93	1.82	–	0.27	0.44	4.14

Models 610, 610-M

Model no.	Holding Capacity ⬅➡ [lbs.]	Plunger Travel	[lbs.]	Recommendation (not supplied)	Plunger Thread (M)
610	800	1.63	1.69	210203	3/8-16
610-M	800	1.63	1.69	210203-M	M10
See additional adjustment spindles beginning on page 9.1.					

Models lock in both the extended and retracted positions.
Allow handle to fall below plane level to lock in retracted position.

Model 610

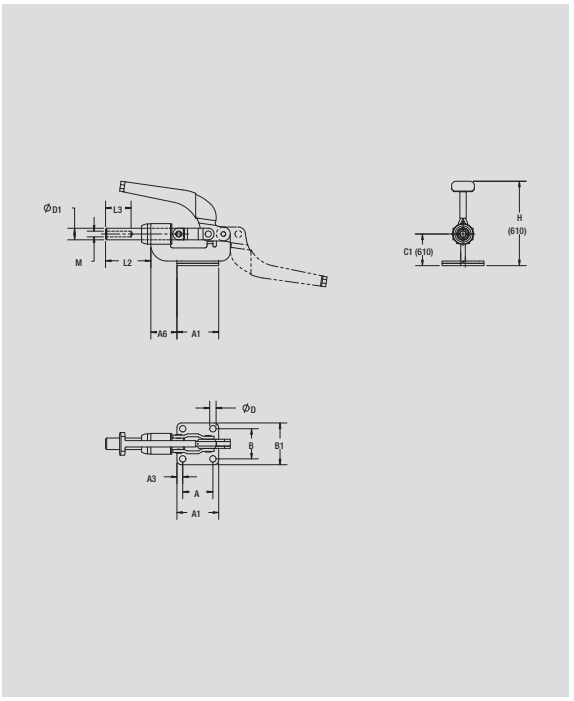

Model no.	A	A1	A3	A6	B	B1	C1	C2	øD	øD1	H	H1	H2	L	L2	L3			
610	1.62	2.25	0.31	1.41	1.62	2.25	1.70	0.25	0.34	0.62	4.55	–	–	6.72	2.44	1.25			
610-M	1.62	2.25	0.31	1.41	1.62	2.25	1.70	0.25	0.34	0.62	4.55	–	–	6.72	2.44	1.25			
Available upon request																			

Model 615

Model no.	Holding Capacity ⬅➡ [lbs.]	Plunger Travel	[lbs.]	Recommendation (not supplied)	Plunger Thread (M)
615	300	0.97	0.69	207203	5/16-18
See additional adjustment spindles beginning on page 9.1.					

Model locks only in the extended position.

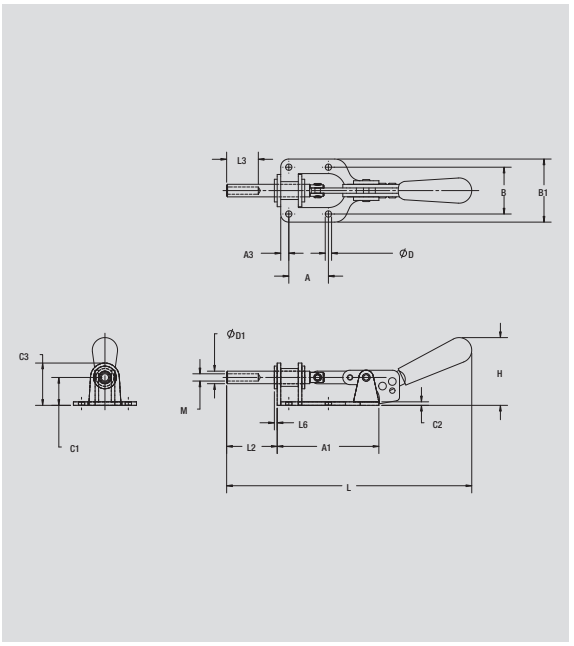

Model no.	A	A1	A3	B	B1	C1	C2	C3	øD	øD1	H	L	L2	L3	L6				
615	1.63	3.53	0.28	1.63	2.19	0.97	0.12	1.47	0.22	0.44	2.35	8.51	1.75	1.00	0.16				

High precision, threaded-body straight-line action clamps

NEW

Application areas

Ideal for all applications in which highly precise clamping is required with holding capacities of up to 1,200 lbs., including assembling, drilling, testing, positioning, locking of containers and other processing operations.

This series is distinguished by its compact design. The single hole threaded mount permits rotation in any direction, allowing complete flexibility in the fixture.

Product features

Precision model
Hardened and polished plunger
Front-side external threads for direct installation in sheet-metal plates and fixtures
Plunger with internal thread
Oil-resistant, ergonomically shaped DE-STA-CO handle grip

Accessories

Straight-line action clamps are normally delivered without adjustment spindles. Recommendations are provided. Whenever required, the spindle can be purchased as an accessory part.

Model 614-M

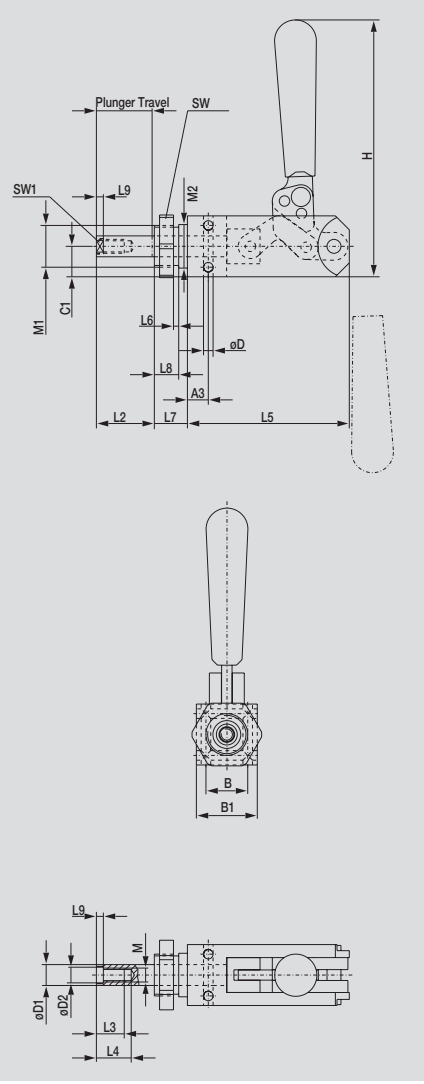

Model no.	Holding Capacity [lbs.]	Plunger Travel	[lbs.]	Recommendation (not supplied)	Plunger Thread (M)	Mounting Nut Standard Equipment
614-M	1,200	1.25	1.81	207203-M	M8	614-1-10

See additional adjustment spindles beginning on page 9.1.

Model locks in both the extended and retracted positions.

Model no.	A3	B	B1	C1	øD	øD1	øD2	H	L2	L3	L4	L5	L6	L7	L8	L9	M1	M2	SW	SW1		
614-M	0.87	0.94	1.38	0.69	0.22	0.47	0.35	5.81	1.32	0.63	0.79	3.66	0.12	0.75	0.55	0.16	M24 x 1.5	0.98	36	10		

Available upon request

Model 617

Model no.	Holding Capacity [lbs.]	Plunger Travel	[lbs.]	Recommendation (not supplied)	Plunger Thread (M)
617	2,000	1.00	0.88	461203	5/16-18
Additional adjustment spindles are listed from page 9.1 forward					

Model locks only in the extended positions.

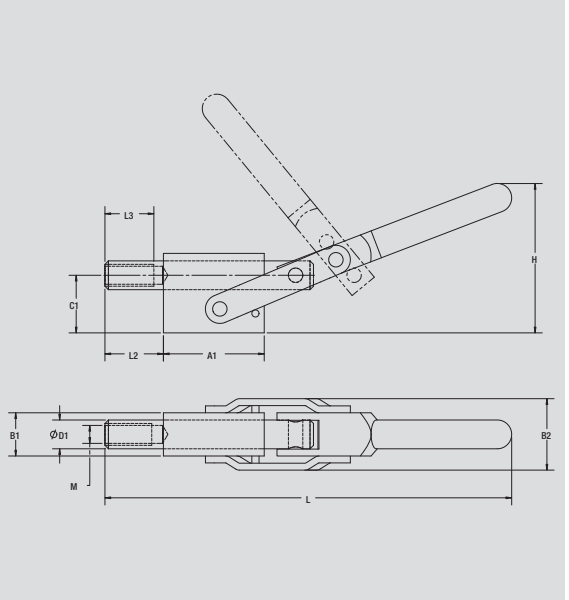

Model no.	A1	B1	C1	øD1	H	L	L3
617	1.75	0.75	1.00	0.50	2.59	7.06	0.85
Available upon request							

Models 620, 620-M

Model no.	Holding Capacity [lbs.]	Plunger Travel	[lbs.]	Recommendation (not supplied)	Plunger Thread (M)
620	600	1.11	1.50	210203	3/8-16
620-M	600	1.11	1.50	210203-M	M10
See additional adjustment spindles beginning on page 9.1.					

Models lock only in the extended position.

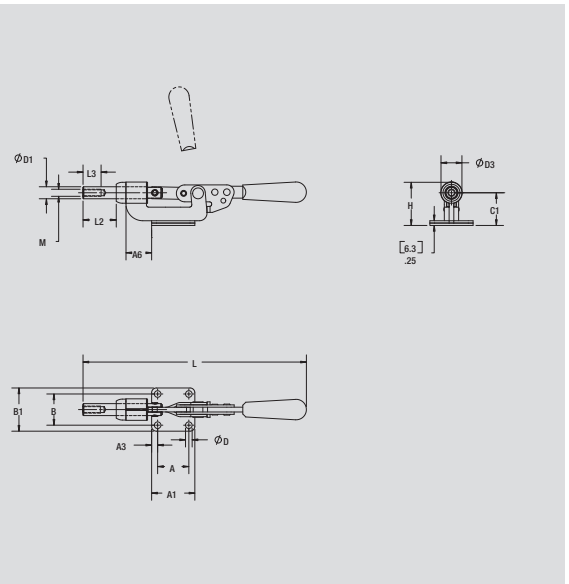

Model 620-M
Handle and plunger move in opposite directions.

Model no.	A	A1	A3	A6	B	B1	B2	C1	C2	øD	øD1	øD3	H	H1	H2	L	L2	L3
620	1.63	2.25	0.31	1.33	1.63	2.25	–	1.70	0.25	0.34	0.62	1.09	2.26	–	–	11.63	1.73	1.00
620-M	1.63	2.25	0.31	1.33	1.63	2.25	–	1.70	0.25	0.34	0.62	1.09	2.26	–	–	11.63	1.73	1.00
Available upon request																		

Models 630, 630-M, 640, 640-M

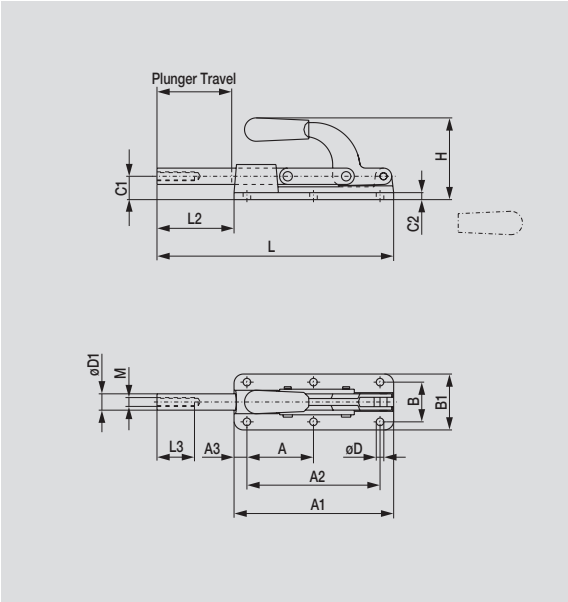

Model no.	Holding Capacity [lbs.]	Plunger Travel	[lbs.]	Recommendation (not supplied)	Plunger Thread (M)
630	2,500	2.00	1.90	210203	3/8-16
630-M	2,500	2.00	1.90	210203-M	M10
640	7,500	4.00	6.71	220203	1/2-13
640-M	7,500	4.00	6.71	220203-M	M12

ALSO AVAILABLE		
As Air/Hydraulic	Model 830	Page 11.20
In DE-STA-CO® Toggle Lock Plus	Model 630-R	Page 4.18
See accessories beginning on page 9.1.		

Models lock in both the extended and retracted positions.
Allow handle to fall below plane level to lock in retracted position.

Model no.	A	A1	A2	A3	B	B1	C1	C2	øD	øD1	H	L	L2	L3
630	1.38	5.03	3.00	0.50	1.63	2.25	0.81	0.18	0.34	0.62	3.09	7.00	1.97	1.25
630-M	1.38	5.03	3.00	0.50	1.63	2.25	0.81	0.18	0.34	0.62	3.09	7.00	1.97	1.25
640	3.56	8.53	7.12	0.69	2.13	3.00	1.25	0.38	0.41	0.87	4.39	12.66	4.13	2.00
640-M	3.56	8.53	7.12	0.69	2.13	3.00	1.25	0.38	0.41	0.87	4.39	12.66	4.13	2.00

Available upon request

Models 630-R, 630-MR

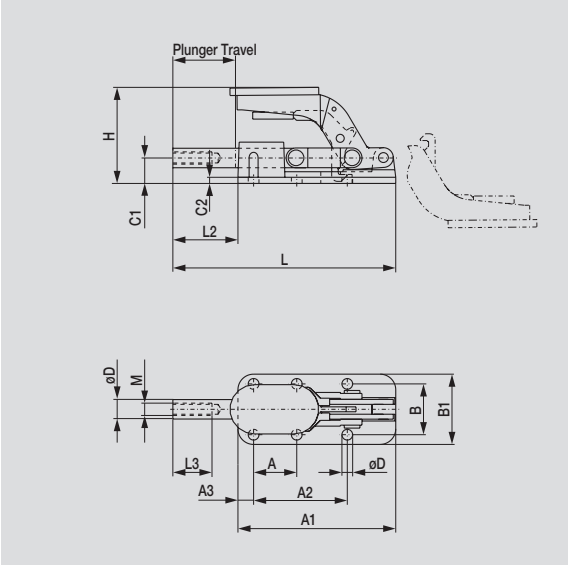

Model no.	Holding Capacity [lbs.]	Plunger Travel	[lbs.]	Recommendation (not supplied)	Plunger Thread (M)
630-R	2,500	2.00	1.90	210203	3/8-16
630-MR	2,500	2.00	1.90	210203-M	M10

See additional adjustment spindles beginning on page 9.1.

DE-STA-CO® Toggle Lock Plus version of models 630, 630-M
Plunger with internal thread
Cast base, black-oxide finish
Allow handle to fall below plane level to lock in retracted position.

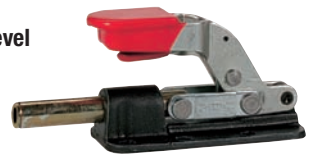

Model no.	A	A1	A2	A3	B	B1	C1	C2	øD	øD1	H	L	L2	L3
630-R	1.38	5.03	3.00	0.50	1.63	2.25	0.81	0.18	0.34	0.62	3.06	7.00	1.97	1.25
630-MR	1.38	5.03	3.00	0.50	1.63	2.25	0.81	0.18	0.34	0.62	3.06	7.00	1.97	1.25

Available upon request

Standard straight-line action clamps

Application areas

Ideal for all applications in which work is performed with holding capacities of up to 16,000 lbs., including assembling, drilling, testing, positioning and other processing operations.

Product features

- Flanged base
- Plunger with internal thread
- Forged base, black-oxide finish
- Rivets made of stainless steel
- Zinc plated

Accessories

Straight-line action clamps are normally delivered without adjustment spindles. Recommendations are provided. Whenever required, the spindle can be purchased as an accessory part.

Models 650, 650-M

Model no.	Holding Capacity [lbs.]	Plunger Travel	[lbs.]	Recommendation (not supplied)	Plunger Thread (M)
650	16,000	3.00	5.59	250203	5/8-11
650-M	16,000	3.00	5.59	250203-M	M16

ALSO AVAILABLE		
As Air/Hydraulic	Model 850	Page 11.21
See accessories beginning on page 9.1.		

Models lock in both the extended and retracted positions.
Allow handle to fall below plane level to lock in retracted position.

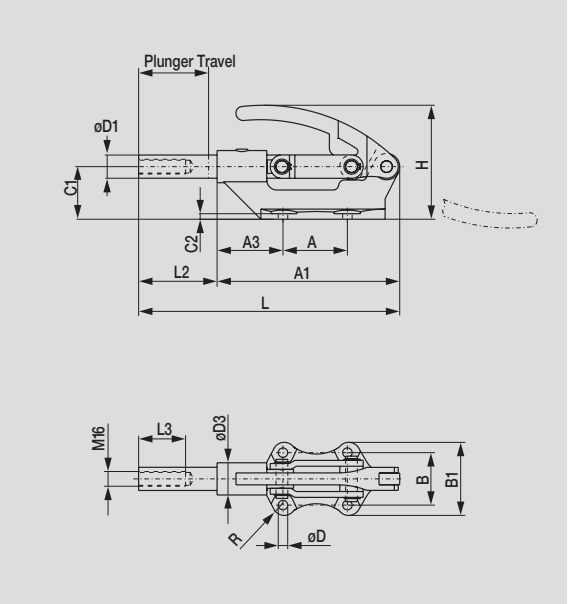

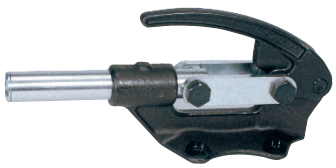

Model no.	A	A1	A3	B	B1	C1	C2	øD	øD1	øD3	H	L	L2	L3	R
650	2.75	7.81	2.88	2.25	3.25	2.25	0.25	0.41	0.99	1.38	4.87	11.16	3.35	2.00	0.45
650-M	2.75	7.81	2.88	2.25	3.25	2.25	0.25	0.41	0.99	1.38	4.87	11.16	3.35	2.00	0.45

Available upon request

Standard straight-line action clamps, low profile version

NEW

Application areas

These new low-profile plunger clamps can be used where overhead clearance is a problem. The large holding capacities for these clamps are packaged in a small compact design. Supplied with a metric plunger. Compact, low profile design allows for use in areas where overhead clearance is a problem.

Product features

Clamp base cast steel, black-oxide finish
Other parts zinc plated and passivated

Models 95030, 95040, 95050, 95060

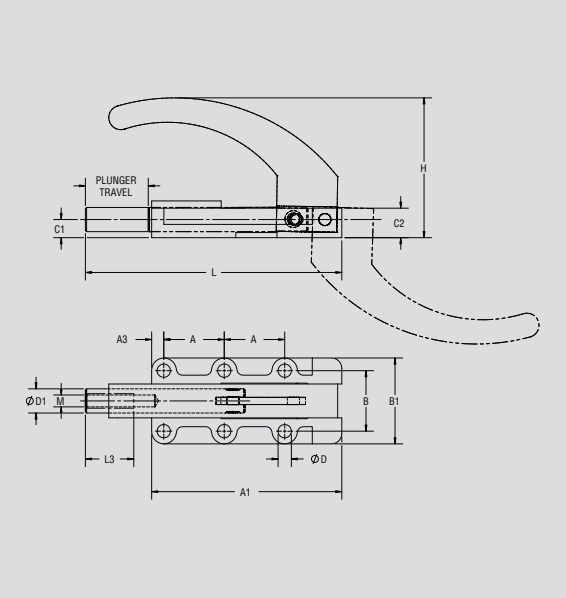

Model no.	Holding Capacity ⬅➡ [lbs.]	Plunger Travel	⚖ [lbs.]	Recommendation (not supplied)	Plunger Thread (M)
95030	550	0.98	0.80	205203-M	M6
95040	1,100	1.50	1.60	207203-M	M8
95050	1,650	1.97	2.10	220203-M	M12
95060	3,965	2.36	6.40	220203-M	M12
See additional adjustment spindles beginning on page 9.1.					

Models lock in both the extended and retracted positions.
Allow handle to fall below plane level to lock in retracted position.

Model 95030

Model no.	A	A1	A3	B	B1	C1	C2	øD	øD1	H	L	L3
95030	0.98	3.07	0.20	0.98	1.40	0.30	0.48	0.22	0.39	2.28	4.17	0.79
95040	1.38	4.35	0.34	1.38	2.00	0.39	0.72	0.26	0.55	2.82	5.87	0.98
95050	1.77	5.59	0.39	1.77	2.56	0.55	0.94	0.33	0.75	3.21	7.52	1.57
95060	2.17	6.73	0.43	2.17	3.00	0.63	1.08	0.41	0.87	3.55	9.17	1.57

Models 670, 675, 690, 695

56701
Model 670-1MB

The unique feature of these clamps is the collet-type bushing that can be adjusted to eliminate plunger end movement after long repeated use. The plunger also has a flat which prevents lateral movement and allows offset piloting and holding.

The plunger is drilled and tapped for threaded spindles or custom fixturing.

The adjustable pre-load nut (PL) can be used to lock the clamp against itself when not under pressure and therefore prevent opening when mounted vertically. The spring hold-open device (S) prevents the clamp from accidentally closing.

The mounting base (B) is supplied disassembled with the four models, to enable welding the base and the main assembly in any handle position.

Series 675 and 695 (shorter stroke) reach the over-center position only when clamping. Series 670 and 690 (longer stroke) lock in both the extended and retracted position.

- Precision clamps for high production
- For high accurate repeatability
- Adjustable, collet-type bushing minimizes plunger end movement
- Pre-load nut and spring hold open devices are optional

56751
Model 675-1MB

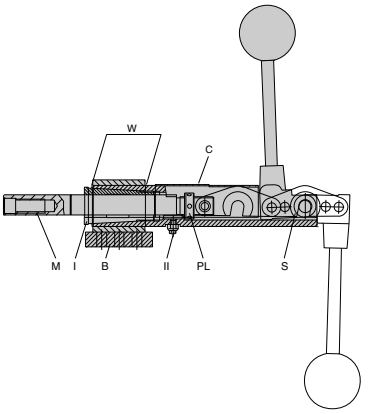

Symbols

B	– Mounting Base
C	– Cover Plate
M	– Metric Version
PL	– Pre-Load Lock
S	– Spring Hold-open Device
W	– Welding Range
I	– Adjustable Plunger Bushing
II	– Plunger Locating Screw

56901
Model 690-1MB
(Handle welded at
180˚ as special order)

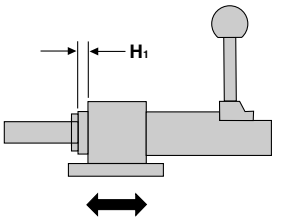

Welding range H_1
axial
0-8 mm

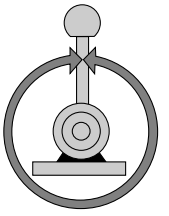

Welding range
radial
360˚

Before welding, adjust the main assembly on the mounting base in axial and radial directions.

Models 670, 675

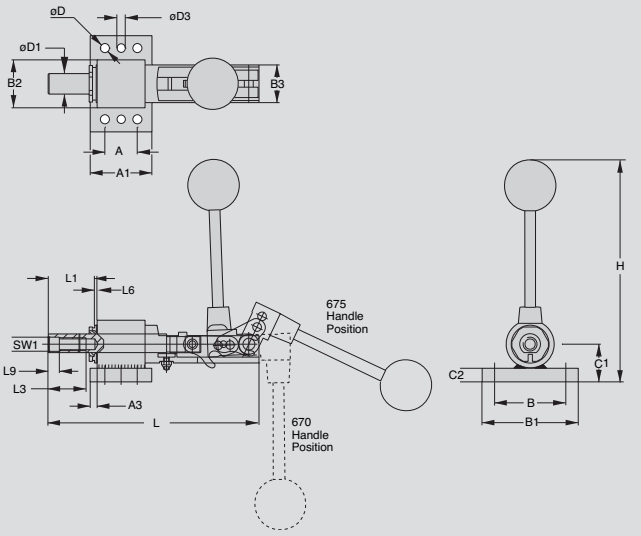

Models 690, 695

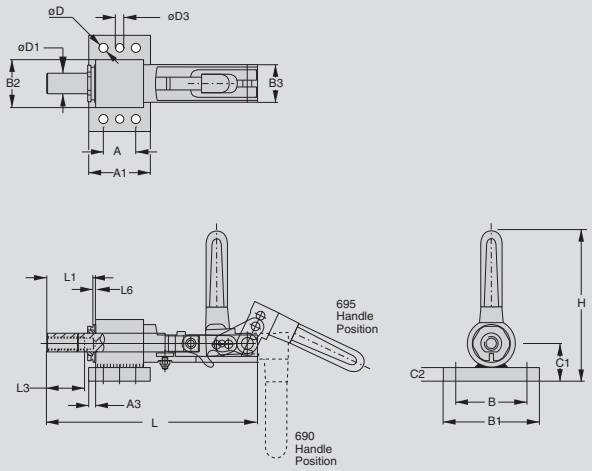

Model no.	Holding Capacity	Weight	Plunger Travel	Plunger Thread	Longe Stroke	Short Stroke	Mounting Base	Pre-load Lock	Hold-open Device	Plunger Collet Brushing	Plunger Locating	Application		
												Push	Pull	
670-1MB	2,400 lbs.	4 lbs.	57	M12 x 1.75										
670-1MBPLS	2,400 lbs.	4.2 lbs.	57	M12 x 1.75										
675-1MB	2,400 lbs.	3.8 lbs.	28	M12 x 1.75										
675-1MBPLS	2,400 lbs.	4 lbs.	28	M12 x 1.75										
690-1MB	5,000 lbs.	8 lbs.	76	M16 x 2										
690-1MBPLS	5,000 lbs.	8.2 lbs.	76	M16 x 2										
695-1MB	5,000 lbs.	7 lbs.	38	M16 x 2										
695-1MBPLS	5,000 lbs.	7.2 lbs.	38	M16 x 2										

Model no.	A	A1	A3	B	B1	B2	B3	C1	C2	øD	øD1	øD3	H	L	L1	L3	L6	L9	SW1
670-1MB	30	57	6.4	66	89	44.5	35	34.8	12.7	8.4	19	7.8	206	268	75.5	35	0-8	10.3	13H7
670-1MBPLS	30	57	6.4	66	89	44.5	35	34.8	12.7	8.4	19	7.8	206	268	75.5	35	0-8	10.3	13H7
675-1MB	30	57	6.4	66	89	44.5	35	34.8	12.7	8.4	19	7.8	206	195	44.4	35	0-8	10.3	13H7
675-1MBPLS	30	57	6.4	66	89	44.5	35	34.8	12.7	8.4	19	7.8	206	195	44.4	35	0-8	10.3	13H7
690-1MB	50	76.2	9.5	82	102	–	44.4	41.3	12.7	10.5	25	9.8	162	338	85.9	25	0-8	–	–
690-1MBPLS	50	76.2	9.5	82	102	–	44.4	41.3	12.7	10.5	25	9.8	162	338	85.9	25	0-8	–	–
695-1MB	50	76.2	9.5	82	102	–	44.4	41.3	12.7	10.5	25	9.8	162	240	47.8	25	0-8	–	–
695-1MBPLS	50	76.2	9.5	82	102	–	44.4	41.3	12.7	10.5	25	9.8	162	240	47.8	25	0-8	–	–

Model SL3

Straight-Line clamps for gluing and fixturing. Toggle action locks the plunger in the extended position only. Reinforced polymer spindle assembly with removable neoprene tip is included, or you can fit customized ends to the threaded plunger.

- Non-sparking
- Useful in medical and food processing industries
- Locking toggle action, push clamping
- Spindle assembly included
- Constructed of reinforced polymers combining high strength and lightweight features
- Electrically non-conductive
- Resistant to acids, gases, chemicals and elevated temperatures

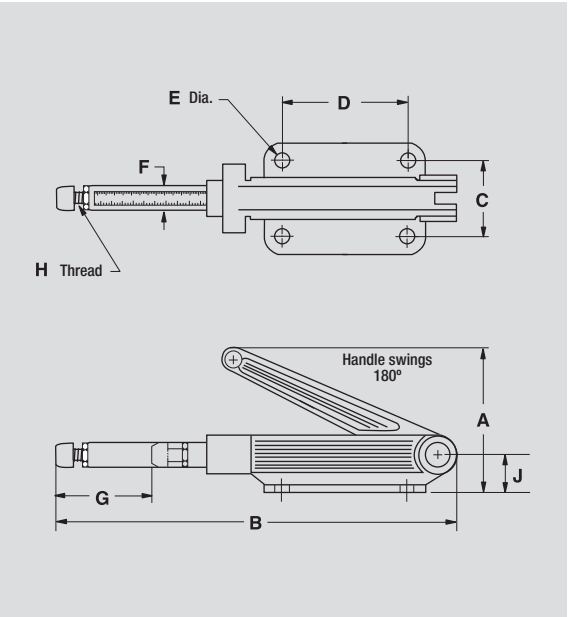

Model no.	Holding Capacity ⬅➡ [lbs.]	Plunger Travel	[lbs.]	Recommendation	Plunger Thread (M)
SL3	150	2.19	0.25	Supplied	1/4-20
See additional adjustment spindles beginning on page 9.1.					

57002
Model SL3

Model no.	A	B	C	D	E	F	G (travel)	H	J
SL3	2.88	8.00	1.50	2.50	0.28	0.50	2.19	1/4-20	0.75

FO Series

Type of Mounting:
Foot mount

Type of Actuation:
Hand wheel or hand lever
(one-handed operation)
Locking lever and Plunger
(two-handed operation)

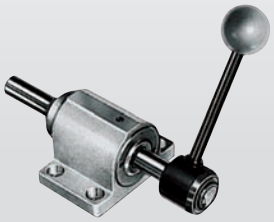

page 5.4

FL Series

Type of Mounting:
Flange mount

Type of Actuation:
Locking lever or hand wheel
(one-handed operation)
Locking lever and Plunger
(two-handed operation)

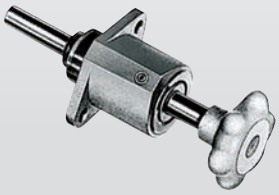

page 5.4

G Series

Type of Mounting:
Through hole mount

Type of Actuation:
Locking lever and Plunger
(two-handed operation)
Hand wheel or hand lever
(one-handed operation)

page 5.4

Variable stroke straight-line action clamps

		Part No.	Holding Capacity max. [lbs]	Page
Flanged base 		F0-082/40 F0-120/-- F0-121/45 F0-122/45	300 600 600 600	5.4
		F0-160/-- F0-161/60 F0-162/60 F0-220/-- F0-221/80	2,000 2,000 2,000 4,000 4,000	
Front flange 		FL-120/-- FL-121/45 FL-122/45	600 600 600	
		FL-160/-- FL-161/60 FL-162/60	2,000 2,000 2,000	
Threaded mount 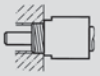		G-082/40 G-120/--	300 600	
		G-121/45 G-122/45	600 600	

Accessories	Part no.		Page
Plunger 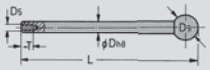	12/100 12/200 12/300 16/100 16/200 16/300 16/400 16/500 22/100 22/200 22/300		5.5
Swivel thrust pad 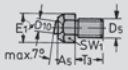	K508 K612 K816 K1222		5.8

	Part no.	Holding Capacity max. [lbs]	Page
	F-160	2,000	5.8
	FRL-12 FRL-16 FRL-20 FRF-12 FRF-16 FRF-2		5.9.

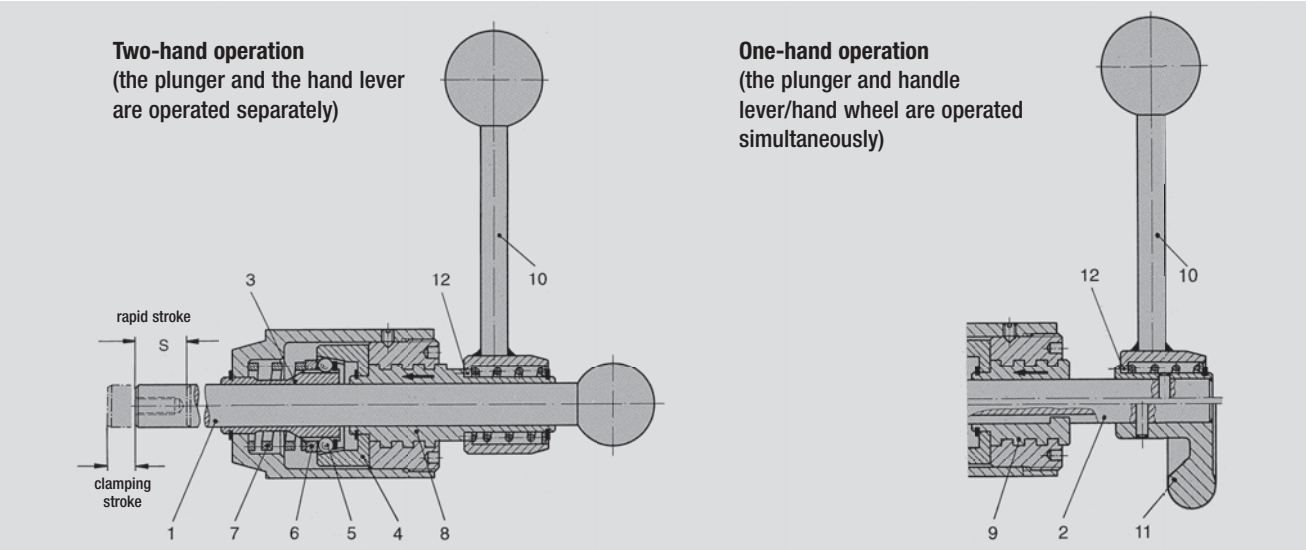

DE-STA-CO's variable stroke straight-line clamps are used in applications where workpiece thicknesses and workpiece tolerances vary. These clamps are suitable for clamping between ribs and hollow spaces difficult to reach.

Compact design and different types of operation allow for application of the straight-line clamps in fixtures for mass production as well as for single part production.

Mounting types

Foot base (FO Series)
Flange mount (FL Series)
Through hole mount (G Series)

Type of operation

Two hand operation
The hand lever (10) and the plunger (1) are separate. The hand lever is connected to the clamping mechanism. The plunger can be removed from the clamp

One-hand operation
The hand lever (10) or the hand wheel (11) and the plunger (2) are linked. The plunger is retained within the clamp.

Clamping operation

The plunger (1) or (2) which is guided within the clamp body contacts the workpiece. By rotating the hand lever (10) or the hand wheel (11) clock-wise the clamping stroke, S1 is engaged and the plunger is tightly gripped by the slotted clamping sleeve (3).

Operating principle

The hand lever s (10) clock-wise rotation causes the threaded sleeve (8) and the conical sleeve (4) to which it is connected to move in the direction of the arrow shown in the drawing. The conical sleeve produces a force-locking connection between the slotted clamping sleeve (3) and the plunger by means of the ball bearings (5) located at the clamping sleeve s perimeter.

Due to the force-locking connection, the plunger rotates and produces the clamping stroke S1. The plunger s rotation may be compensated for by means of a swivel hold-down piece. The clamping strokes S1 specified in this catalog were measured with no opposing forces present while measurements were taken. When clamping this product against a workpiece, the clamping stroke S1 is reduced by the force-locking connection between the plunger and the workpiece. The straight-action clamp is unlocked by turning the hand lever or the hand wheel counter-clockwise. This method is used for both the one-hand and the two-hand operation types. This counter-clockwise rotation makes the conical sleeve (4) and the threaded sleeve (8) or (9) move backward. The pressure spring (7) pushes back the relieved ball bearings (5) via the pressure ring (6).

The force-locking connection between the slotted clamping sleeve and the plunger can be moved freely again. Straight-line clamps which are two-hand operated can also be applied to pull actions when the plunger is inserted in the clamp s housing in the opposite direction. On the one hand operated clamp, the rotation inducing the clamping stroke S1 is directly transmitted from the plunger (2) or the hand wheel to the threaded sleeve (9) via a groovespring connection. The clamping and unclamping operations are executed in the same way as described before.

Handling

To change the position of the handle while in the clamped or the unclamped position, pull the hand lever off its spline (12) and set it in the desired position.

Important

The holding forces specified in the catalog refer to the maximum load exerted on the clamp by counter-forces. For details concerning the clamping force FS exerted on the workpiece by the clamp and depending on the operation force FB (manual force), please see the chart on the next page.

The clamping force is proportional to the operation force. **The achieved clamping force must not exceed the maximum holding force.**

As the straight-line clamps, with the exception of the F-160 model, are designed only for axial load, we recommend to use an additional radial support for the plunger in the event of side load.

Variable stroke straight-line action clamps

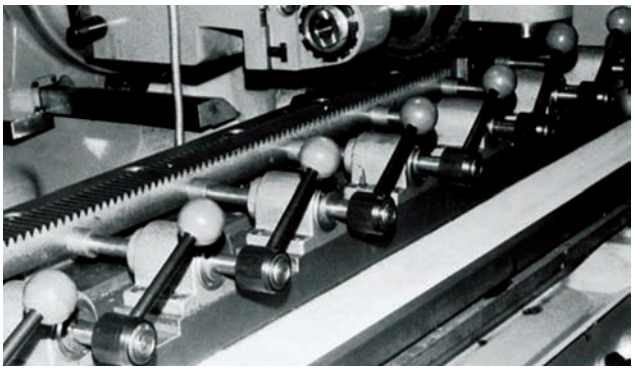

Model F0-161/60 on a milling machine

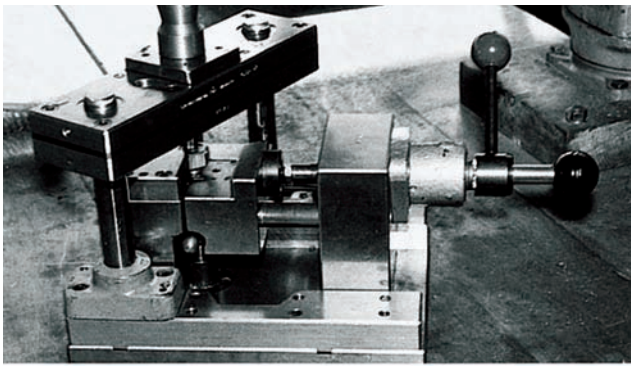

Model FL-160 with plunger 16/100 on a punching fixture

Different designs

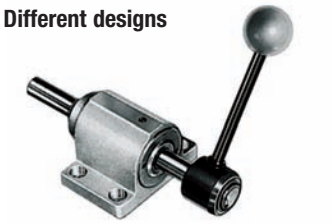

F0 Series
Mounting type: flange base foot mount
Operating method: one-hand or two-hand operation

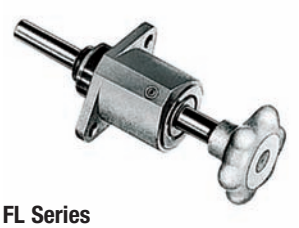

FL Series
Mounting type: front flange mount
Operating method: one-hand or two-hand operation

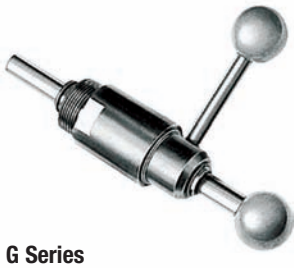

G Series
Mounting type: through hole mount
Operating method: one-hand or two-hand operation

Product list and technical data

Mounting type		Operating method: Two-hand operation, Plunger and hand lever	Operating method: One-hand operation, Hand lever	Operating method: One-hand operation, Hand wheel	Model-no. [1] Plunger order separately; see page 5.5	Max. holding capacity [lbs.]	Clamping force F_S with an operating force F_B: F_B [lbs.]	Clamping force F_S with an operating force F_B: F_S [lbs.]	Rapid stroke S [2] 400 and 500 mm strokes available on request [mm]	Max. clamping stroke S1 [mm]	Weight – [lbs]
Fot mount					F0-082/40	300		100	40	2,5	0.72
					F0-120/--[1]	600		400	100, 200, 300	3	1.19
					F0-121/45	600		400	45	3	1.47
					F0-122/45	600		100	45	3	1.34
					F0-160/--[1]	2,000		500	100, 200, 300	4	2.73
					F0-161/160	2,000		500	60	4	3.40
					F0-162/60	2,000		150	60	4	3.15
					F0-220/--[1]	4,000		600	100, 200, 300	4	5.85
					F0-221/80	4,000		600	80	4	7.46
Flange mount					FL-120/--[1]	600	20	400	100, 200, 300	3	1.07
					FL-121/45	600		400	45	3	1.34
					FL-122/45	600		100	45	3	1.21
					FL-160/--[1]	2,000		500	100, 200, 300	4	2.49
					FL-161/60	2,000		500	60	4	3.15
					FL-162/60	2,000		150	60	4	2.92
Through hole mount					G-082/40	300		100	40	2,5	0.66
					G-120/--[1]	600		400	100, 200, 300	3	1.01
					G-121/45	600		400	45	3	1.31
					G-122/45	600		100	45	3	1.18

Available upon request

Two-hand operation (the plunger and the hand lever are operated separately)

Through hole mount

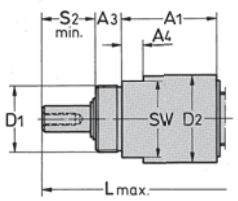

Part no. **G-120/--**

Flange mount

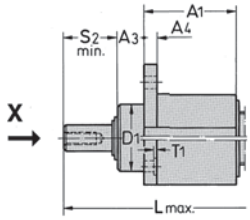

View "X"

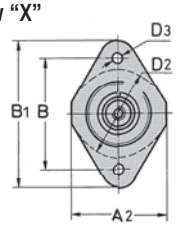

Part no. **FL-120/--**

View "X"

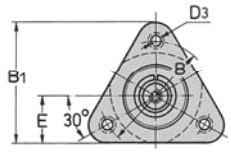

Part no. **FL-160/--**

Foot mount

*without counter-force effect

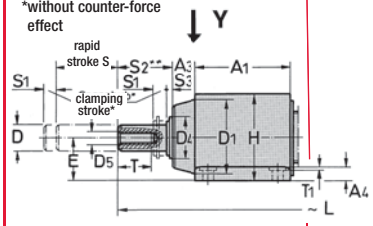

View "Y"

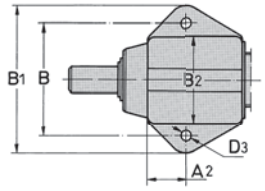

Part no. **FO-120/--**

View "Y"

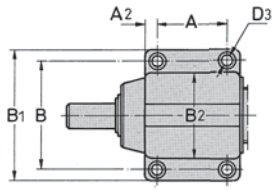

Part no. **FO-160/--**
FO-220/--

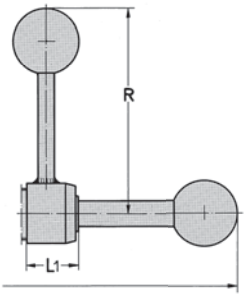

Important
The straight-line clamps are de signed **only for axial load.** In case of side load, we recommend an additonal radial support of the plunger.

Accessories (order separately)

Plunger

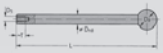

Part no. Ø length	For rapid stroke S	Weight ~ [lbs.]	For clamps
12/100	100	0.30	FO-120
12/200	200	0.62	FL-120
12/300	300	0.82	G-120
16/100	100	0.88	FO-160
16/200	200	1.10	FL-160
16/300*	300	1.54	
22/100	100	2.20	FO-220
22/200	200	2.40	
22/300	300	3.06	

Swivel thrust pad

Part no.	Thread	Weight ~ [lbs.]
K-612	M6	0.02
K-816	M8	0.03
K-1222	M12	0.08

*400 and 500 mm strokes available on request

Mounting type		Part no. without plunger	Available rapid strokes S (order plunger separately)	A	A_1 ~	A_2 ~	A_3 ~	A_4	A_8	B	B_1 ~	B_2	D_{h8}	D_1	D_2	D_3	D_4
Foot mount		FO-120/--	100, 200, 300	–	44	19	12	6,3	8,5	52	68	40	12	35	–	6,5	20
		FO-160/--	100, 200, 300	40	62	11	12	12	10	70	90	52	16	46	–	9	25
		FO-220/--	100, 200, 300	50	75	13	20	15	12	90	115	69	22	60	–	11	36
Flange mount		FL-120--	100, 200, 300	–	44	44	12	6	8,5	52	68	–	12	30^{f7}	40	6,5	20
		FL-160--	100, 200, 300	–	60	–	14	14	10	68	73	–	16	40^{f7}	52	9	25
Through hole mount		G-120/--	100, 200, 300	–	44	–	12	10	8.5	–	–	–	12	M30x1,5	40	–	20

Mounting type		Part no. without plunger	D_5	D_9	D_{10}	E	E_1	H ~	~ L L with rapid strokes: 100	200	300	L_1	R	S_2	S_3	SW ~	SW_1	T	T_1	T_3
Foot mount		FO-120/--	M6	30	6	20	12,5	42	228	328	428	24	95	2,5	2, 5	–	11	12	–	10
		FO-160/--	M8	35	8	30	14,8	58	280	380	480	33	130	3	3	–	13	15	1	14
		FO-220/--	M12	40	9,5	35	19,5	71	295	395	495	35	197	3	3		17	25	1	18
Flange mount		FL-120/--	M6	30	6	–	12,5	–	228	328	428	24	95	2,5	2,5	–	11	12	–	10
		FL-160/--	M8	35	8	28	14,8	–	280	380	480	33	130	3	3	–	13	15	1	14
Through hole mount		G-120/--	M6	30	6	–	12,5	–	228	328	428	24	95	2,5	2, 5	35	11	12	–	12

Variable stroke straight-line action clamps

One-hand operation (the plunger and the hand wheel are operated simultaneously)

Through hole mount

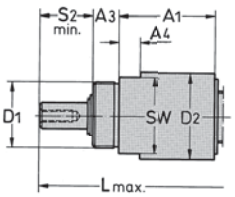

Part no. **G-082/40**
G-122/45

Flange mount

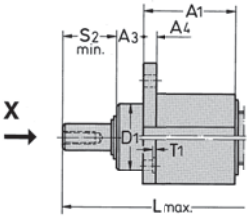

View "X"

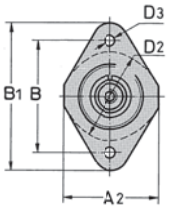

Part no. **FL-122/45**

View "X"

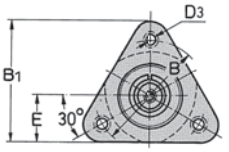

Part no. **FL-162/60**

Foot mount

*without counter-force effect

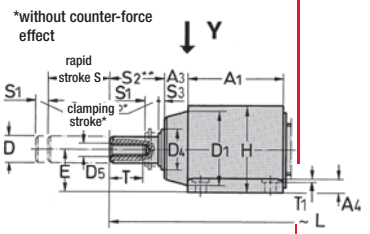

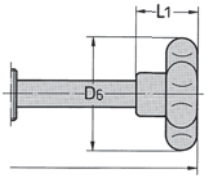

View "Y"

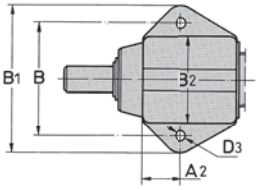

Part no. **FO-082/45**

View "Y"

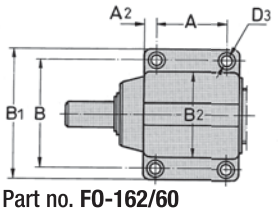

Part no. **FO-162/60**

Important
The straight-line clamps are de signed **only for axial load.** In case of side load, we recommend an additonal radial support of the plunger.

Accessories (order separately)

Swivel thrust pad

Part no.	Thread	Weight ~ [lbs.]
K-508	M5	0.01
K-612	M6	0.02
K-816	M8	0.03
K-1222	M12	0.08

Mounting type	Part no. with plunger	A	A_1 ~	A_2 ~	A_3 ~	A_4	A_5	B	B_1 ~	B_2	D_{h8}	D_1	D_2	D_3	D_4
Foot mount	FO-082/40	–	37	15,3	10	5	6	44	56	35	8	30	–	4,5	16
	FO-122/45	–	44	19	12	6,3	8,5	52	68	40	12	35		6,5	20
	FO-162/60	40	62	11	12	12	10	70	90	52	16	46	–	9	25
Flange mount	FL-122/45	–	44	44	12	6	85	52	68	–	12	30^{f7}	40	6,5	20
	FL-162/60	–	60	–	14	14	10	68	73	–	16	40^{f7}	52	9	25
Through hole mount	G-082/40	–	37	–	10	8	6	–	–	–	8	M24x1,5	35	–	16
	G-122/45	–	44	–	12	10	8,5	–	–	–	12	M30x1,5	40	–	20

Mounting type	Part no. with plunger	D_5	D_6 ~	D_{10} Ø	E	E_1	H ~	L ~	L_1	S_2	S_3 ~	SW	SW_1	T	T_1	T_3
Foot mount	FO-082/40	M5	40	5	18	9,2	36	128	26	9	2,5	–	8	8	–	8
	FO-122-45	M6	75	6	20	12,5	42	153	27	15	2,5	–	11	12	–	10
	FO-162/60	M8	75	8	30	14.8	58	196	35	18	3	–	13	15	1	14
Flange mount	FL-122/45	M6	52	6	–	12,5	–	153	27	15	2,5	–	11	12	–	10
	FL-162/60	M8	75	8	28	14,8	–	196	35	18	3	–	13	15	1	14
Through hole mount	G-082/40	M5	40	5	–	9,2	–	128	26	9	2,5	30	8	12	–	8
	G-122/45	M6	52	6	–	12,5		153	27	15	2,5	35	11	12	–	10

One-hand operation (the plunger and the hand lever are operated simultaneously)

Through hole mount

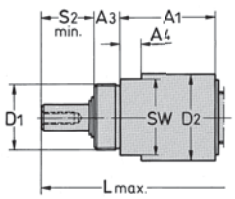

Part no. **G-121/45**

Flange mount

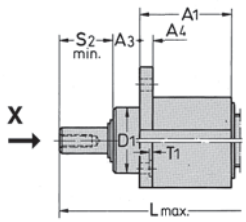

View "X"

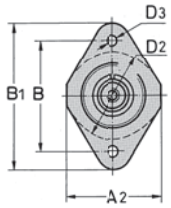

Part no. **FL-121/45**

View "X"

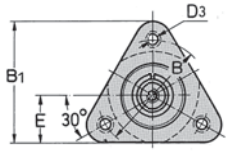

Part no. **FL-161/60**

Foot mount

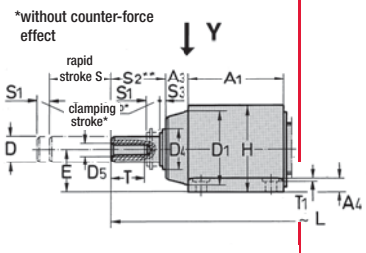

View "Y"

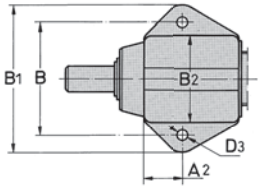

Part no. **FO-121/45**

View "Y"

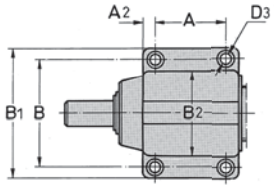

Part no. **FO-161/60**
FO-221/80

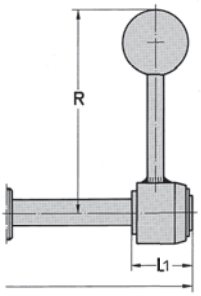

Important
The straight-line clamps are designed **only for axial load.** In case of side load, we recommend an additonal radial support of the plunger.

Accessories (order separately)

Swivel thrust pad

Part no.	Thread	Weight ~ [lbs.]
K-612	M6	0.02
K-816	M8	0.03
K-1222	M12	0.08

Mounting type		Part no. with plunger	A	A_1 ~	A_2	A_3 ~	A_4	A_5	B	B_1 ~	B_2	D_{h8}	D_1	D_2	D_3	D_4
Foot mount		FO-121/45	–	44	19	12	6,3	8,5	52	68	40	12	35	–	6,5	20
		FO-161/60	40	62	11	12	12	10	70	90	52	16	46	–	9	25
		FO-221/80	50	75	13	20	15	12	90	115	69	22	60	–	11	36
Flange mount		FL-121/45	–	44	44	12	6	8,5	52	68	–	12	30^{f7}	40	6,5	20
		FL-161/60	–	60	–	14	14	10	68	73	–	16	40^{f7}	52	9	25
Through hole mount		G-121/45	–	44	–	12	10	8,5	–	–	–	12	M30x1,5	40	–	20

Mounting type		Part no. with plunger	D_5	D_{10} Ø	E	E_1	H ~	L ~	L_1	R ~	S_2	S_3 ~	SW	SW_1	T	T_1	T_3
Foot mount		FO-121/45	M6	6	20	12,5	42	153	27	95	15	2,5	–	11	12	–	10
		FO-162/60	M8	8	30	14,8	58	196	35	130	18	3	–	13	15	1	14
		FO-221/80	M12	9,5	35	19,5	71	245	40	197	20	3	–	17	25	1	18
Flange mount		FL-121/45	M6	6	–	12,5	–	153	27	95	15	2,5	–	11	12	–	10
		FL-161/60	M8	8	28	14,8	–	196	35	130	18	3	–	13	15	1	14
Through hole mount		G-121/45	M6	6	–	12,5	–	153	27	95	15	2,5	35	11	12	–	10

Variable stroke straight-line action clamps

Technical features

- High holding capacity of 2,000 lbs.
- High side load capacity
- Plunger guide
- Wiper ring avoiding contamination of clamping mechanism
- Block style base provides for variable mounting
- Low weight due to the aluminium housing
- 50 mm horizontal and vertical hole pattern

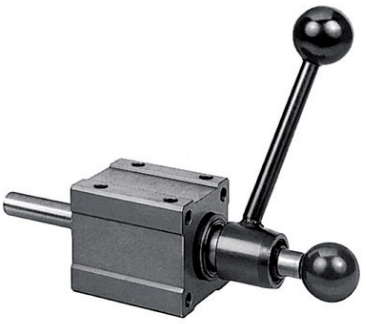

Allowable side load F_S depending on the stroke length L_H

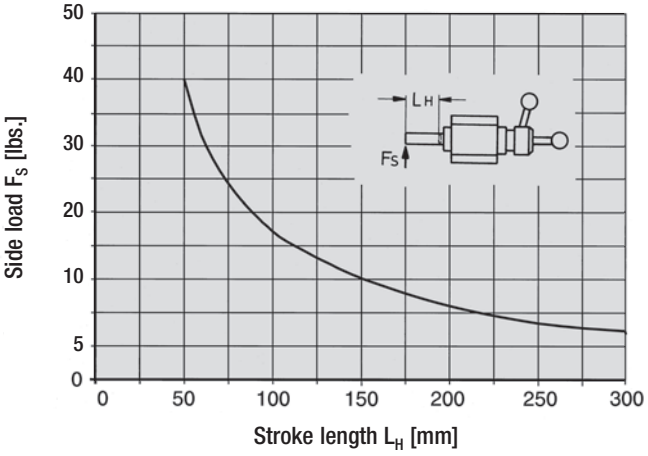

Accessories (order separately)

Plunger

Part no.	For rapid strokes S	D_{h8}	D5	D9	L ~	T ~	Weight ~[lbs.]
16/100	100	16	M8	35	280	15	0.90
16/200	200	16	M8	35	380	15	1.10
16/300*	300	16	M8	35	480	15	1.54

*400 and 500 mm strokes available upon request

Swivel thrust pad

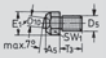

Part no	A5	D5	D10	E1	T3	SW1	Weight ~[lbs.]
K-816	10	M8	8	14,8	14	13	0.08

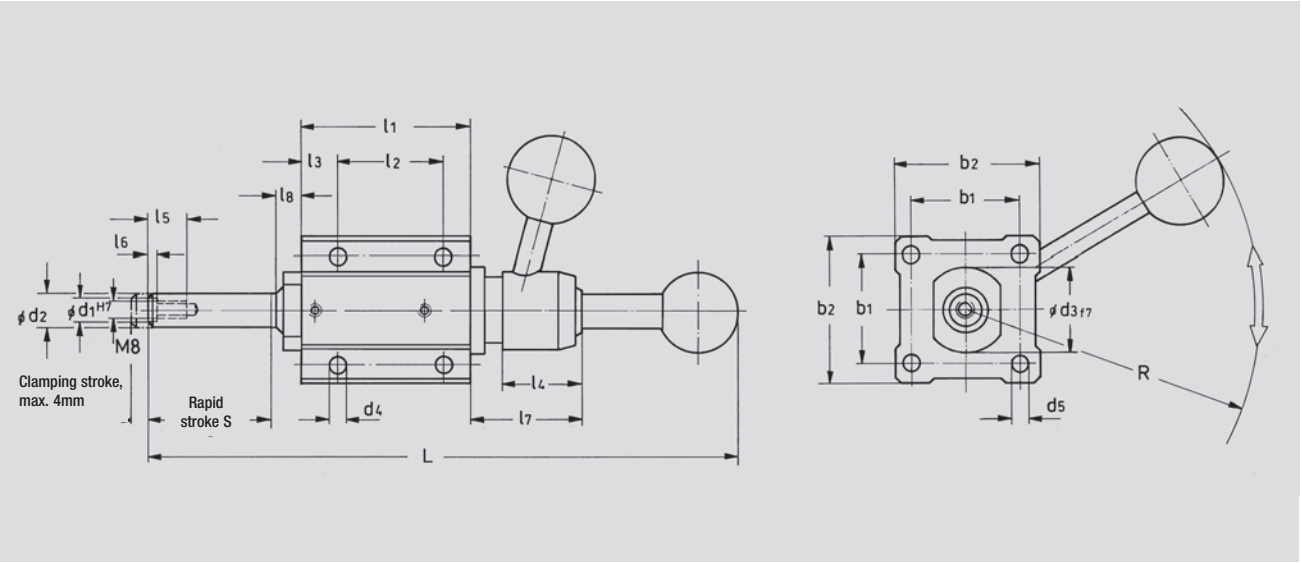

Model no. without plunger	Max. holding capacity [lbs.]	Fs* [lbs.]	b1	b2	~ L For rapid strokes: 100	200	300	l1	l2	l3	l4	l5	l6	l7	l8	$d1^{H7}$	$d2_{h8}$	d3	d4	d5	R	Weight ~ [lbs.]
F-160/--	2,000	100	50	68	250	350	451	80	50	18	35	20	2	50	12	10	16	40	8,3	8,5	165	3.30

*Fs = exerting force at an operating force of 20 lbs.

NEW

Models FRF-12, FRF-16, FRF-20, FRL-12, FRL-16

Application areas

These new quick-acting Ram Lock clamps are ideal for bridging of different workpiece thicknesses and can be front or base mounted. Each version offers high holding forces and is available in three different maximum stroke lengths. The clamp's unique design allows "fine" clamping force adjustments once the locking lever is activated.

Model no.	Holding Capacity [lbs.]	Plunger Travel	[lbs.]
FRL-12	5,500	0-3 3/8	1.00
FRL-16	11,000	0-5 5/16	1.50
FRF-12	5,500	0-3 3/8	1.00
FRF-16	11,000	0-5 5/16	1.50

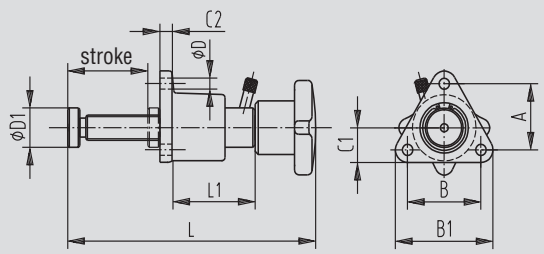

Series FRF

To operate:

1. Slide spindle bar forward to contact the workpiece.
2. Turn the locking lever clockwise to engage the locking mechanism.
3. Turn knob handle to "fine" to adjust the clamping force.
4. After operation is finished, turn the locking lever counter-clockwise to disengage locking mechanism.

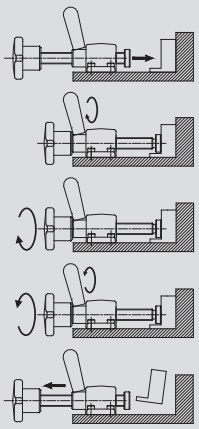

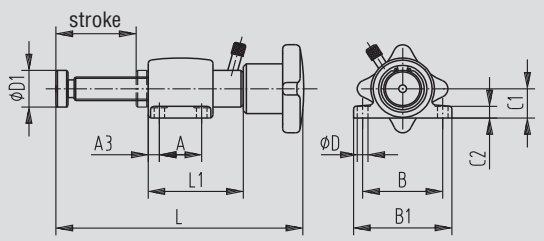

Series FRL

Series FRF

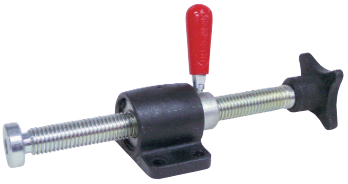

Series FRL

Model no.	A	A3	B	B1	C1	C2	øDmm	øD1	L	L1
FRL-12	0.79	0.24	1.77	2.17	0.63	0.24	5.5	0.75	6.46	1.69
FRL-16	1.57	0.23	2.09	2.56	0.79	0.31	7.0	0.98	9.25	2.24
FRF-12	1.30	–	1.50	1.97	0.67	0.24	5.5	0.75	6.46	1.69
FRF-16	1.65	–	1.91	2.54	0.87	0.31	7.0	0.98	9.25	2.24

Notes

NEW

Model 3011

page 6.5

NEW

Parting Line Clamps:
Models 353-35, 353-65

page 6.19

Product group – pull action latch clamps

Application areas

Quick closure of covers and flaps on rotating or stationary containers, drums, boxes and molds. The latch clamp is distinguished by its compact design and with high holding capacity. The latch hooks can be adjusted on all models.

The essential product features

New: convenient, patented one-hand operation made possible by means of a thumb control lever
Compact design
High holding capacities

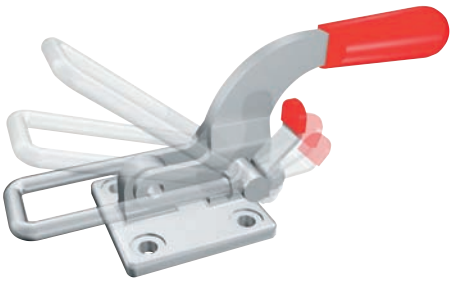

Model 331 used to lock down the lid of a container

	Model no.	Holding Capacity max. [lbs.]	Category	Page
	301 311	375 1,200	Standard eyelet Standard eyelet	6.4
	3011	2,000		6.5

	Model no.	Holding Capacity max. [lbs.]	Category	Page
	323 331 341	360 700 2,000	Standard horizontal Standard horizontal Standard horizontal	6.6
	331-R 341-R	700 2,000	DE-STA-CO® Toggle Lock Plus DE-STA-CO® Toggle Lock Plus	6.8

	Model no.	Holding Capacity max. [lbs.]	Category	Page
	375	4,000	Standard horizontal	6..9
	375-B	4,000	Standard horizontal	6.10
	375-R	4,000	DE-STA-CO® Toggle Lock Plus	6.11
	375-BR	4,000	DE-STA-CO® Toggle Lock Plus	6.12
	385	7,500	Standard horizontal	6.13
	385-L	7,500		6.13
	385-R	7,500	DE-STA-CO® Toggle Lock Plus	6.14
	326 336 346	8 12 25	Rubber latch Rubber latch Rubber latch	6.15

	Model no.	Holding Capacity max. [lbs.]	Category	Page
	324 334 344	500 1,000 2,000	Standard vertical Standard vertical Standard vertical	6.16
	374	4,000		6.18
	353-35 353-65	2,800 2,100		6.19
	330 351 371 381	200 375 750 1,000	Standard hook Standard hook Standard hook Standard hook	6.20
	351-B	375	Standard horizontal	6.22
	351-R 371-R	375 750	DE-STA-CO® Toggle Lock Plus DE-STA-CO® Toggle Lock Plus	6.23

Pull action latch clamps – horizontal

These latch-type pull action clamps are equipped with red vinyl handle for comfortable operation. A fixed stop automatically limits handle travel at various clamping positions once the clamp is installed, removing the need to adjust a manual stop. Model 301 has 4" drawing movement and the larger Model 311 has 3 3/8".

Models 301, 311

Model no.	Holding Capacity [lbs.]	[lbs.]
301	375	.70
311	1,200	1.16

ALSO AVAILABLE		
In Stainless Steel	Model 301-SS	Page 8.20

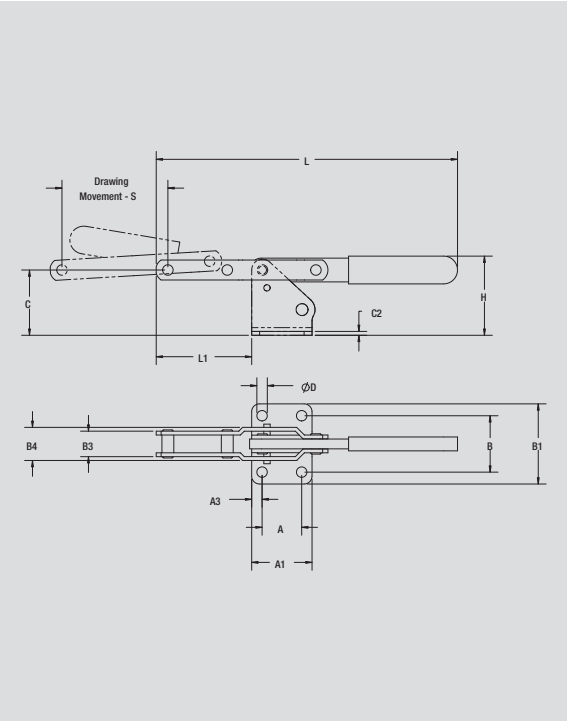

Model no.	A	A1	A3	B	B1	B3	B4	C	C2	øD	H	L	L1	S
301	0.75	1.38	0.32	1.25	1.75	0.80	1.04	1.63	0.12	0.28	1.91	8.40	2.59	4.00
311	1.25	1.91	0.33	1.78	2.53	0.80	1.05	2.06	0.12	0.33	2.50	9.51	3.01	3.38

Model 3011

NEW

Information

DE-STA-CO clamp series 3011 is the newest addition to the rotational mold product offering. As a direct, drop-in replacement for the legacy 311 clamp, these cast, robust clamps will withstand the harsh environment of the rotational mold industry. A fixed stop automatically limits handle travel at various clamping positions after installation, removing the need to adjust a manual stop. The clamps are available in 4130 carbon steel or 316 stainless steel. Model 3011 is black oxided to help against corrosion. The ergonomic whale-tail handle provides better operator hand comfort.

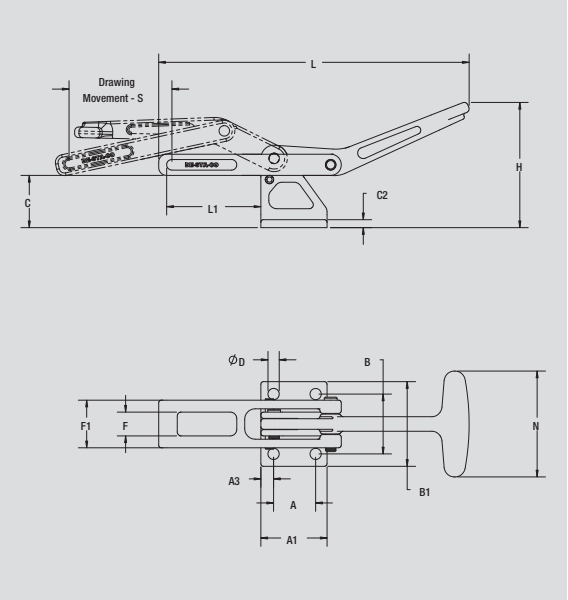

Model no.	Holding Capacity [lbs.]	[lbs.]	Drawing Movement
3011	2,000	2.00	3.00

ALSO AVAILABLE		
In Stainless Steel	Model 3011-SS	Page 8.21

Model 3011

Model no.	A	A1	A3	B	B1	C	C2	øD	F	F1	H	L	L1	N	S			
3011	1.25	1.97	0.38	1.78	2.52	1.87	0.24	0.33	0.71	1.42	3.72	9.23	3.04	3.15	3.00			

Pull action latch clamps – horizontal

With latch plate and U-shaped hook

Application areas

Ideal for quick closing of covers and flaps on rotating or stationary containers, drums, boxes and molds. The models with optional release lever are preferred where vibration of containers, transportation of boxes and drums is required.

Safety instructions

To ensure a secure form of locking, the clamp must be adjusted into the corresponding over-center toggle position.

Product features

Patented thumb control lever
Rivets made of stainless steel
Zinc plated
Oil-resistant, ergonomically shaped DE-STA-CO handle grip

Accessories

Clamps are supplied with U-shaped hooks and latch plate

Models 323, 331, 341

Model no.	Holding Capacity ➡ [lbs.]	⚖ [lbs.]	Adjustment Range
323	360	0.15	0-0.49
323-M-25			
323-M-50			
323-M-100			
331	700	0.56	0-0.59
331-M-25			
331-M-50			
331-M-100			
341	2,000	1.43	0-0.76
341-M-25			
341-M-50			
341-M-100			

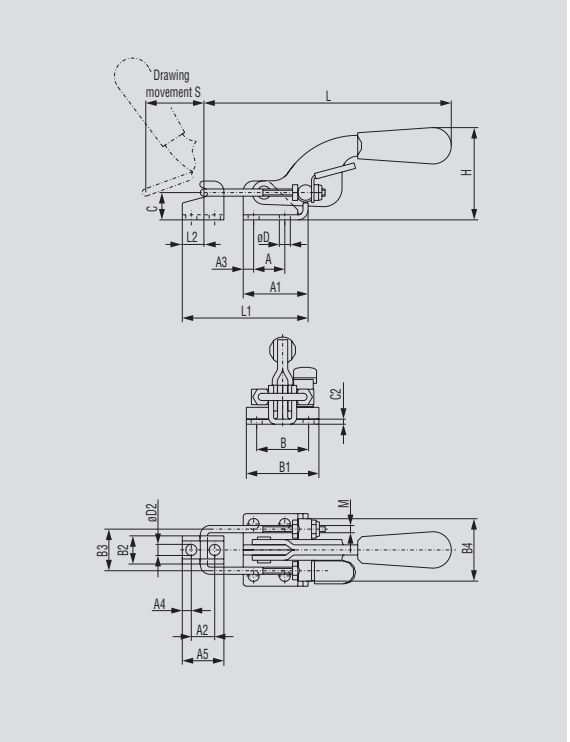

ALSO AVAILABLE		
As DE-STA-CO® Toggle Lock Plus	Model 331-R	Page 6.7
	Model 341-R	Page 6.7
In Stainless Steel	Model 323-SS	Page 8.14
	Model 331-SS	Page 8.14
	Model 341-SS	Page 8.14
See accessories beginning on page 9.1.		

Patented #6,561,556
For added convenience and functionality, every DE-STA-CO pull action clamp is now equipped with a thumb control lever as a standard feature.

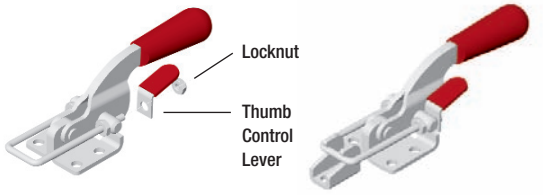

Model no.	A	A1	A2	A3	A4	A5	B	B1	B2	B3	B4	C	C2	øD	øD2	H	L	L1 max	L2	M	S
323	0.63	1.02	0.39	0.20	0.24	0.79	0.75	1.10	0.52	0.75	1.06	0.47	0.08	0.17	0.17	1.19	3.91	2.25	0.35	M4	1.81
323-M-25	0.63	1.02	0.39	0.20	0.24	0.79	0.75	1.10	0.52	0.75	1.06	0.47	0.08	0.17	0.17	1.19	4.89	3.23	0.35	M4	1.81
323-M-50	0.63	1.02	0.39	0.20	0.24	0.79	0.75	1.10	0.52	0.75	1.06	0.47	0.08	0.17	0.17	1.19	5.88	4.22	0.35	M4	1.81
323-M-100	0.63	1.02	0.39	0.20	0.24	0.79	0.75	1.10	0.52	0.75	1.06	0.47	0.08	0.17	0.17	1.19	7.85	6.19	0.35	M4	1.81
331	0.75	1.56	0.56	0.26	0.22	1.00	1.25	1.74	0.68	1.00	1.50	0.66	0.12	0.27	0.27	1.97	6.06	3.05	0.50	M5	1.75
331-M-25	0.75	1.56	0.56	0.26	0.22	1.00	1.25	1.74	0.68	1.00	1.50	0.66	0.12	0.27	0.27	1.97	7.04	4.03	0.50	M5	1.75
331-M-50	0.75	1.56	0.56	0.26	0.22	1.00	1.25	1.74	0.68	1.00	1.50	0.66	0.12	0.27	0.27	1.97	8.03	5.02	0.50	M5	1.75
331-M-100	0.75	1.56	0.56	0.26	0.22	1.00	1.25	1.74	0.68	1.00	1.50	0.66	0.12	0.27	0.27	1.97	10.00	6.99	0.50	M5	1.75
341	1.63	2.38	0.75	0.38	0.38	1.50	1.50	2.12	1.19	1.75	2.32	0.94	0.16	0.33	0.33	2.89	8.20	4.59	0.75	M8	2.50
341-M-25	1.63	2.38	0.75	0.38	0.38	1.50	1.50	2.12	1.19	1.75	2.32	0.94	0.16	0.33	0.33	2.89	9.18	5.57	0.75	M8	2.50
341-M-50	1.63	2.38	0.75	0.38	0.38	1.50	1.50	2.12	1.19	1.75	2.32	0.94	0.16	0.33	0.33	2.89	10.17	6.56	0.75	M8	2.50
341-M-100	1.63	2.38	0.75	0.38	0.38	1.50	1.50	2.12	1.19	1.75	2.32	0.94	0.16	0.33	0.33	2.89	12.14	8.53	0.75	M8	2.50

Available upon request

Models 331-R, 341-R

Model no.	Holding Capacity [lbs.]	[lbs.]	Adjustment Range
331-R	700	0.56	0-0.59
331-R-M-25			
331-R-M-50			
331-R-M-100			
341-R	2,000	1.43	0-0.76
341-R-M-25			
341-R-M-50			
341-R-M-100			

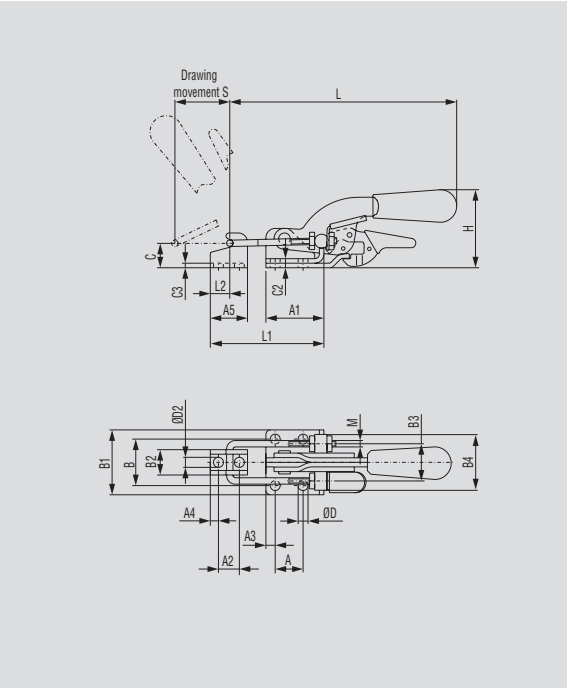

ALSO AVAILABLE		
In Stainless Steel	Model 331-RSS	Page 8.15
	Model 341-RSS	Page 8.15

Supplied with DE-STA-CO® Toggle Lock Plus

Patented #6,561,556
For added convenience and functionality, every DE-STA-CO pull action clamp is now equipped with a thumb control lever as a standard feature.

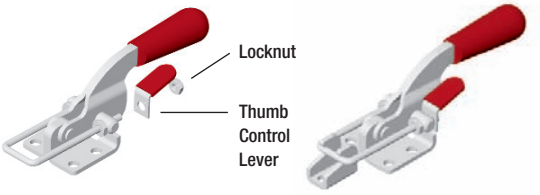

Model no.	A	A1	A2	A3	A4	A5	B	B1	B2	B3	B4	C	C2	C3	øD	øD2	H	L	L1 max	L2	M	S
331-R	0.75	1.56	0.56	0.26	0.22	1.00	1.25	1.74	0.68	1.00	1.50	0.66	0.24	0.12	0.27	0.27	2.08	6.06	3.05	0.50	M5	1.75
331-R-M-25	0.75	1.56	0.56	0.26	0.22	1.00	1.25	1.74	0.68	1.00	1.50	0.66	0.24	0.12	0.27	0.27	2.08	7.04	4.03	0.50	M5	1.75
331-R-M-50	0.75	1.56	0.56	0.26	0.22	1.00	1.25	1.74	0.68	1.00	1.50	0.66	0.24	0.12	0.27	0.27	2.08	8.03	5.02	0.50	M5	1.75
331-R-M-100	0.75	1.56	0.56	0.26	0.22	1.00	1.25	1.74	0.68	1.00	1.50	0.66	0.24	0.12	0.27	0.27	2.08	10.00	6.99	0.50	M5	1.75
341-R	1.63	2.38	0.75	0.38	0.38	1.50	1.50	2.12	1.19	1.75	2.32	0.94	0.16	0.16	0.33	0.33	2.89	8.20	4.59	0.75	M8	2.50
341-R-M-25	1.63	2.38	0.75	0.38	0.38	1.50	1.50	2.12	1.19	1.75	2.32	0.94	0.16	0.16	0.33	0.33	2.89	9.18	5.57	0.75	M8	2.50
341-R-M-50	1.63	2.38	0.75	0.38	0.38	1.50	1.50	2.12	1.19	1.75	2.32	0.94	0.16	0.16	0.33	0.33	2.89	10.17	6.56	0.75	M8	2.50
341-R-M-100	1.63	2.38	0.75	0.38	0.38	1.50	1.50	2.12	1.19	1.75	2.32	0.94	0.16	0.16	0.33	0.33	2.89	12.14	8.53	0.75	M8	2.50

Available upon request

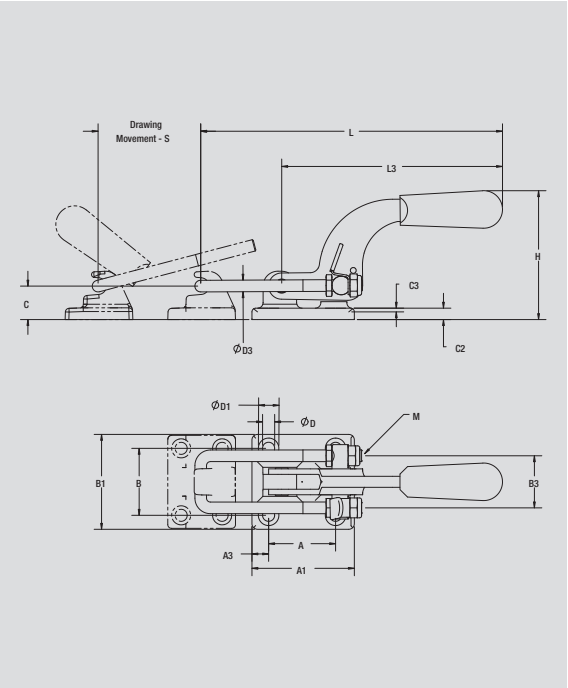

Model no.	Holding Capacity [lbs.]	[lbs.]	Adjustment Range
375	4,000	2.75	0-0.69
375-M-25			
375-M-50			
375-M-100			

ALSO AVAILABLE

As DE-STA-CO® Toggle Lock Plus	Model 375-R	Page 6.10

See accessories beginning on page 9.1.

Patented #6,561,556
For added convenience and functionality, every DE-STA-CO pull action clamp is now equipped with a thumb control lever as a standard feature.

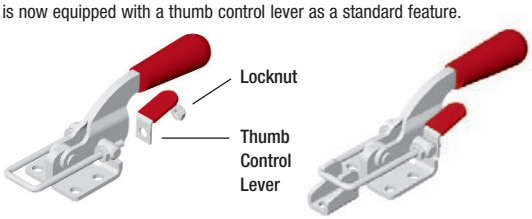

Patented Thumb Lever Control #6,561,556

Model 375
Shown with optional latch plate (385102)

Model no.	A	A1	B	B1	B3	C	C2	C3	øD	øD1	øD3	H	L	L3	M	S
375	2.25	3.44	2.25	3.19	1.75	1.13	0.38	0.13	0.41	0.69	0.39	4.26	10.17	7.45	M10	3.50
375-M-25	2.25	3.44	2.25	3.19	1.75	1.13	0.38	0.13	0.41	0.69	0.39	4.26	11.15	7.45	M10	3.50
375-M-50	2.25	3.44	2.25	3.19	1.75	1.13	0.38	0.13	0.41	0.69	0.39	4.26	12.14	7.45	M10	3.50
375-M-100	2.25	3.44	2.25	3.19	1.75	1.13	0.38	0.13	0.41	0.69	0.39	4.26	14.11	7.45	M10	3.50

Available upon request

Model 375-B

Model no.	Holding Capacity [lbs.]	[lbs.]	Adjustment Range
375-B	4,000	2.75	0-0.69
375-B-M-25			
375-B-M-50			
375-B-M-100			

ALSO AVAILABLE		
As DE-STA-CO® Toggle Lock Plus	Model 375-BR	Page 6.11
See accessories beginning on page 9.1.		

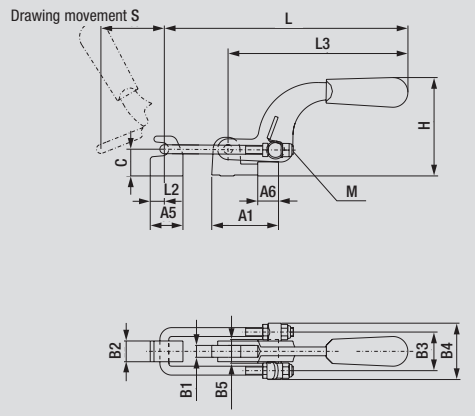

Patented #6,561,556
For added convenience and functionality, every DE-STA-CO pull action clamp is now equipped with a thumb control lever as a standard feature.

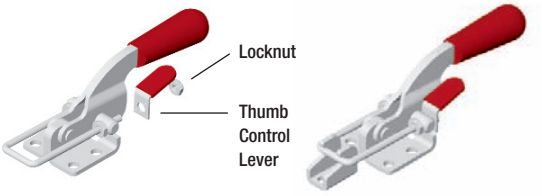

Model 375-B
Shown with supplied
latch plate (375509)

Model no.	A1	A5	A6	B1	B2	B3	B4	B5	C	H	L	L3	M	S
375-B	2.80	1.38	0.87	0.49	0.88	1.75	2.50	1.00	1.13	4.18	10.20	7.48	M10	3.50
375-B-M-25	2.80	1.38	0.87	0.49	0.88	1.75	2.50	1.00	1.13	4.18	11.18	7.48	M10	3.50
375-B-M-50	2.80	1.38	0.87	0.49	0.88	1.75	2.50	1.00	1.13	4.18	12.17	7.48	M10	3.50
375-B-M-100	2.80	1.38	0.87	0.49	0.88	1.75	2.50	1.00	1.13	4.18	14.14	7.48	M10	3.50

Available upon request

Pull action latch clamps – horizontal

With latch hook

Application areas

Ideal for quick closing of covers and flaps on rotating or stationary containers, drums, boxes and molds. These clamps offer holding capacities of up to 7,500 lbs.

The models with release lever are recommended where vibration of containers, transportation of boxes and drums is present.

Safety instruction

Tto ensure a secure form of locking, the clamp must be adjusted into the corresponding over-center toggle position.

Product features

Patented thumb control lever
Casted base, black oxided
Zinc plated
Oil-resistant, ergonomically shaped DE-STA-CO handle grip

Accessories

Clamps are supplied complete with latch hooks. Optional latch plate available (385102).

Model 375-R

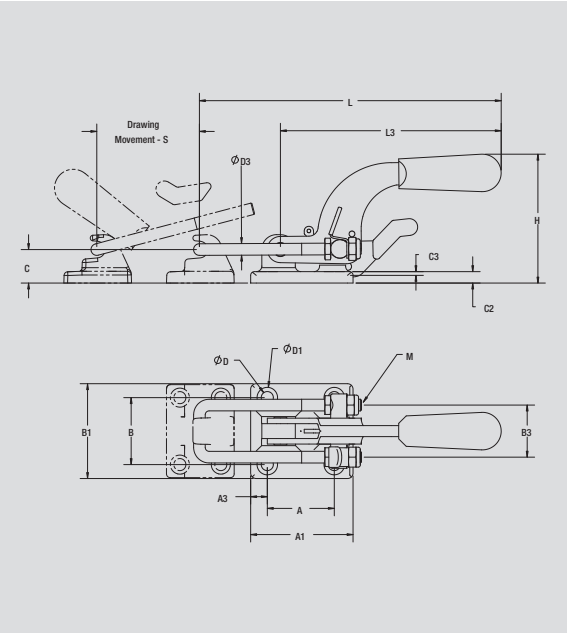

Model no.	Holding Capacity [lbs.]	[lbs.]	Adjustment Range
375-R	4,000	2.10	0-0.69
375-R-M-25			
375-R-M-50			
375-R-M-100			

DE-STA-CO® Toggle Lock Plus

Model 375-R
Shown with optional latch plate (385102)

Patented #6,561,556
For added convenience and functionality, every DE-STA-CO pull action clamp is now equipped with a thumb control lever as a standard feature.

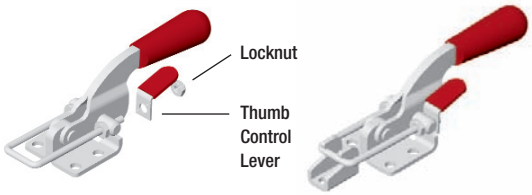

Model no.	A	A1	B	B1	B4	C	C2	C3	øD	øD1	øD3	H	L	L3	M	S
375-R	2.25	3.44	2.25	3.19	1.75	1.13	0.38	0.13	0.41	0.69	0.39	4.26	10.17	7.45	M10	3.50
375-R-M-25	2.25	3.44	2.25	3.19	1.75	1.13	0.38	0.13	0.41	0.69	0.39	4.26	11.15	7.45	M10	3.50
375-R-M-50	2.25	3.44	2.25	3.19	1.75	1.13	0.38	0.13	0.41	0.69	0.39	4.26	12.14	7.45	M10	3.50
375-R-M-100	2.25	3.44	2.25	3.19	1.75	1.13	0.38	0.13	0.41	0.69	0.39	4.26	14.11	7.45	M10	3.50

Available upon request

Model 375-BR

Model no.	Holding Capacity [lbs.]	[lbs.]	Adjustment Range
375-BR	4,000	2.75	0-0.69
375-BR-M-25			
375-BR-M-50			
375-BR-M-100			

DE-STA-CO® Toggle Lock Plus

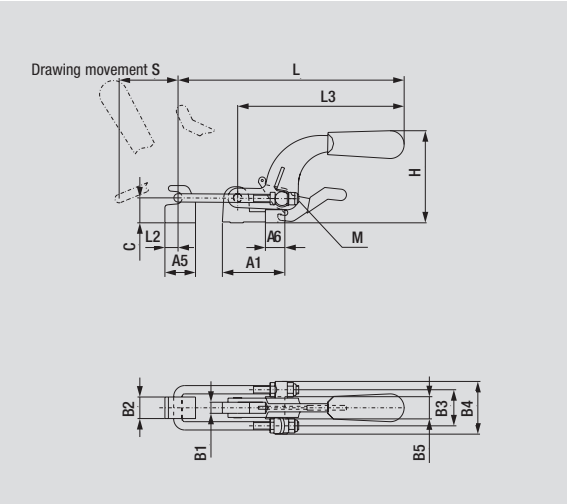

Model 375-BR
Shown with supplied
latch plate (375509)

Patented #6,561,556
For added convenience and functionality, every DE-STA-CO pull action clamp is now equipped with a thumb control lever as a standard feature.

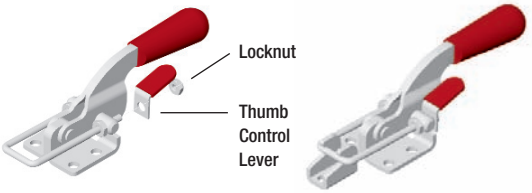

Model no.	A1	A5	A6	B1	B2	B3	B4	B5	C	H	L	L3	M	S
375-BR	2.80	1.38	0.87	0.49	0.88	1.75	2.50	1.00	1.13	4.18	10.20	7.48	M10	3.50
375-BR-M-25	2.80	1.38	0.87	0.49	0.88	1.75	2.50	1.00	1.13	4.18	11.18	7.48	M10	3.50
375-BR-M-50	2.80	1.38	0.87	0.49	0.88	1.75	2.50	1.00	1.13	4.18	12.17	7.48	M10	3.50
375-BR-M-100	2.80	1.38	0.87	0.49	0.88	1.75	2.50	1.00	1.13	4.18	14.14	7.48	M10	3.50

Available upon request

Model 385

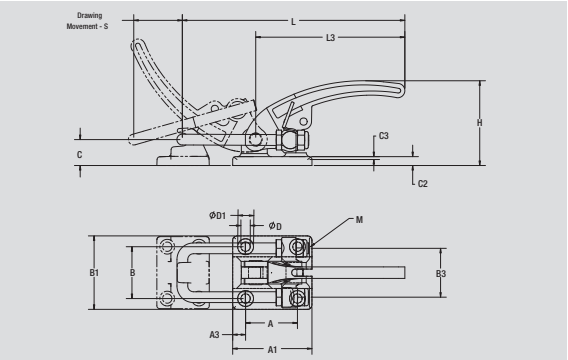

Model no.	Holding Capacity [lbs.]	[lbs.]	Adjustment Range
385	7,500	3.62	0-1.07
385-M-25			
385-M-50			
385-M-100			

ALSO AVAILABLE		
As DE-STA-CO® Toggle Lock Plus	Model 385-R	Page 6.13
As Stainless Steel	Model 385-V2A	Page 8.15
See accessories beginning on page 9.1.		

Patented #6,561,556
For added convenience and functionality, every DE-STA-CO pull action clamp is now equipped with a thumb control lever as a standard feature.

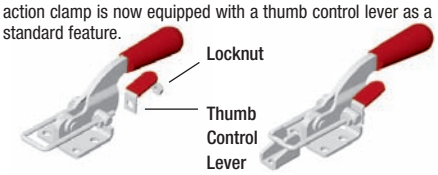

Patented Thumb Lever Control #6,561,556

Model 385
Shown with optional latch plate (385102)

Model no.	A	A1	A3	B	B1	B3	C	C2	C3	øD	øD1	H	L	L3	M	S
385	2.25	3.44	0.56	2.25	3.19	2.12	1.13	0.38	0.13	0.41	0.69	3.75	10.13	6.44	M12	2.19
385-M-25	2.25	3.44	0.56	2.25	3.19	2.12	1.13	0.38	0.13	0.41	0.69	3.75	11.11	6.44	M12	2.19
385-M-50	2.25	3.44	0.56	2.25	3.19	2.12	1.13	0.38	0.13	0.41	0.69	3.75	12.10	6.44	M12	2.19
385-M-100	2.25	3.44	0.56	2.25	3.19	2.12	1.13	0.38	0.13	0.41	0.69	3.75	14.07	6.44	M12	2.19

Available upon request

Model 385-L

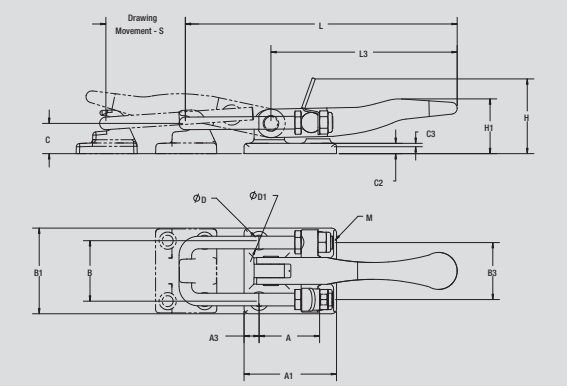

Model no.	Holding Capacity [lbs.]	[lbs.]	Adjustment Range
385-L	7,500	3.62	0-1.07
385-L-M-25			
385-L-M-50			
385-L-M-100			

Versions in stainless steel beginning on page 8.1

Patented #6,561,556
For added convenience and functionality, every DE-STA-CO pull action clamp is now equipped with a thumb control lever as a standard feature.

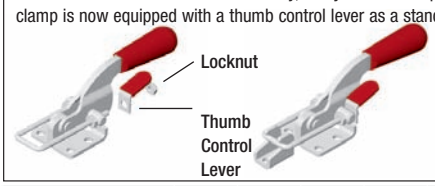

Patented Thumb Lever Control #6,561,556

Model 385-L
Shown with optional latch plate (385102)

Model no.	A	A1	A3	B	B1	B3	C	C2	C3	øD	øD1	H	H1	L	L3	M	S
385-L	2.25	3.44	0.56	2.25	3.19	2.12	1.13	0.38	0.13	0.41	0.69	2.75	1.84	10.13	6.95	M12	2.19
385-L-M-25	2.25	3.44	0.56	2.25	3.19	2.12	1.13	0.38	0.13	0.41	0.69	2.75	1.84	11.11	6.95	M12	2.19
385-L-M-50	2.25	3.44	0.56	2.25	3.19	2.12	1.13	0.38	0.13	0.41	0.69	2.75	1.84	12.10	6.95	M12	2.19
385-L-M-100	2.25	3.44	0.56	2.25	3.19	2.12	1.13	0.38	0.13	0.41	0.69	2.75	1.84	14.07	6.95	M12	2.19

Available upon request

Model 385-R

Model no.	Holding Capacity [lbs.]	[lbs.]	Adjustment Range
385-R	7,500	3.39	0-1.07
385-R-M-25			
385-R-M-50			
385-R-M-100			

DE-STA-CO® Toggle Lock Plus

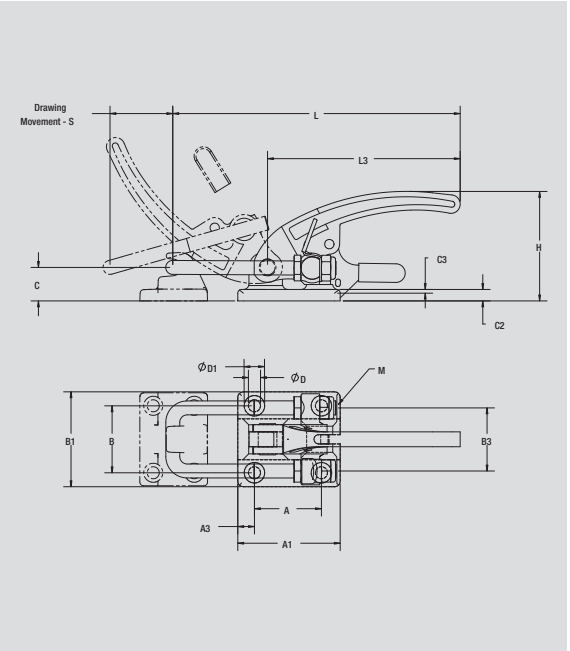

Patented Thumb Lever Control #6,561,556

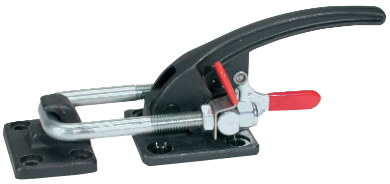

Model 385-R
Shown with optional
latch plate (385102)

Patented #6,561,556
For added convenience and functionality, every DE-STA-CO pull action clamp is now equipped with a thumb control lever as a standard feature.

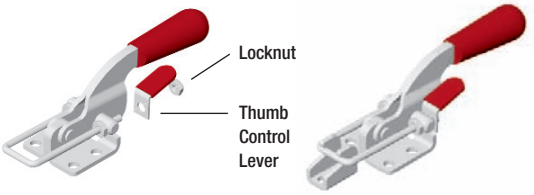

Model no.	A	A1	A3	B	B1	B3	C	C2	C3	øD	øD1	H	L	L3	M	S
385-R	2.25	3.44	0.56	2.25	3.19	2.12	1.13	0.38	0.13	0.41	0.69	2.75	10.13	6.95	M12	2.19
385-R-M-25	2.25	3.44	0.56	2.25	3.19	2.12	1.13	0.38	0.13	0.41	0.69	2.75	11.11	6.95	M12	2.19
385-R-M-50	2.25	3.44	0.56	2.25	3.19	2.12	1.13	0.38	0.13	0.41	0.69	2.75	12.10	6.95	M12	2.19
385-R-M-100	2.25	3.44	0.56	2.25	3.19	2.12	1.13	0.38	0.13	0.41	0.69	2.75	14.07	6.95	M12	2.19

Available upon request

Model 326

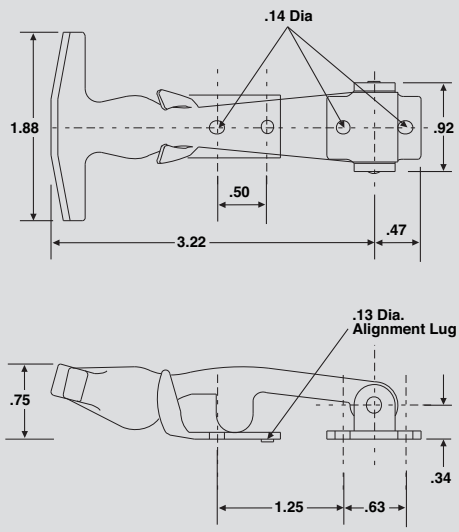

Model 336

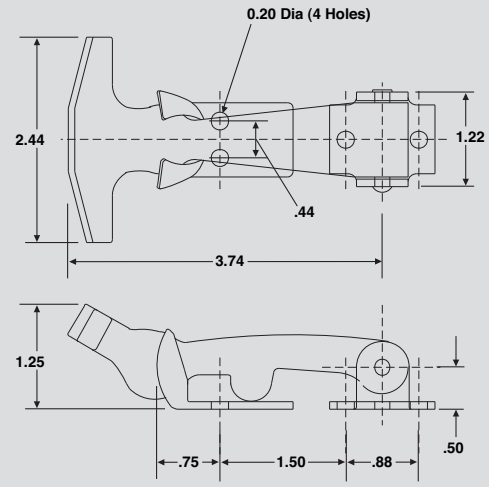

Model 346

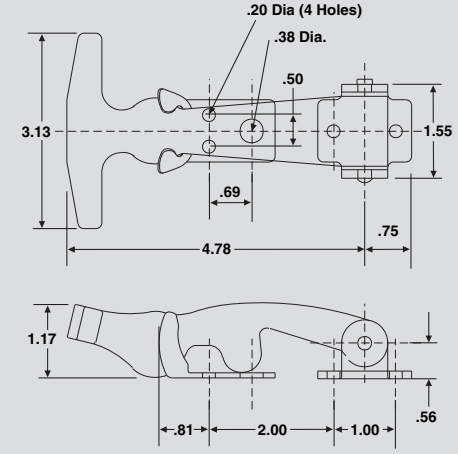

Information

DE-STA-CO "T" handle rubber latches provide vibration and sound dampening and compensation for severe misalignment. The latch handle is made of an ozone resistant synthetic rubber and the base and keeper are formed of passivated stainless steel. Operation is easy: simply pull on handle and stretch to slide bulb of rubber handle into the keeper.

- Automatically compensates for misalignment
- Dampens vibration
- Dampens sound
- Easy to operate
- Ozone resistant synthetic rubber (EPDM)
- Durometer 70 ± 5
- Stainless steel (passivated) components (302-304SS)
- Three models
- Low cost
- Max. temperature rating 250° F (121° C)

LOAD DEFLECTION CHART

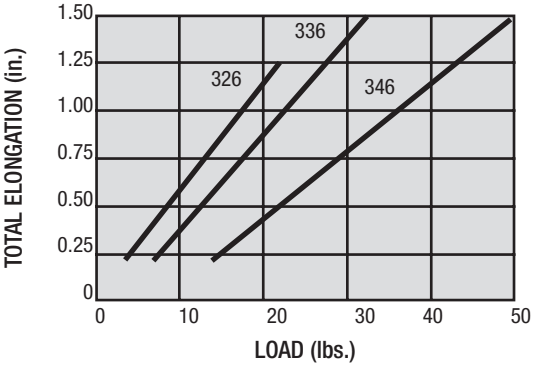

Model no.	EDP no.	Holding Capacity	Weight
326	53260	8 lbs.	0.07 lbs.
336	53360	12 lbs.	0.16 lbs.
346	53460	25 lbs.	0.36 lbs.

Pull action latch clamps – vertical

With latch plate and U-shaped hook

Application areas

Ideal for quick clamping for the closure of covers and flaps on rotating or stationary containers, drums, boxes and molds. Holding capacities of up to 2,000 lbs.

Product features

Patented thumb control lever
Rivets made of stainless steel
Zinc plated
Oil-resistant, ergonomically shaped DE-STA-CO handle grip

Accessories

Clamps are supplied with U-shaped hooks and latch plates. (except Model 374)

Models 324, 334, 344

Model no.	Holding Capacity [lbs.]	[lbs.]	Adjustment Range
324	500	0.25	0-0.50
324-M-25			
324-M-50			
324-M-100			
334	1,000	0.60	0-0.80
334-M-25			
334-M-50			
334-M-100			
344	2,000	1.50	0-1.26
344-M-25			
344-M-50			
344-M-100			

ALSO AVAILABLE		
In Stainless Steel	Models 324-SS. 334-SS	Page 8.16
	Model 344-SS	Page 8.16
Accessories	Page 9.1	
Available upon request, as are a number of other modifications		

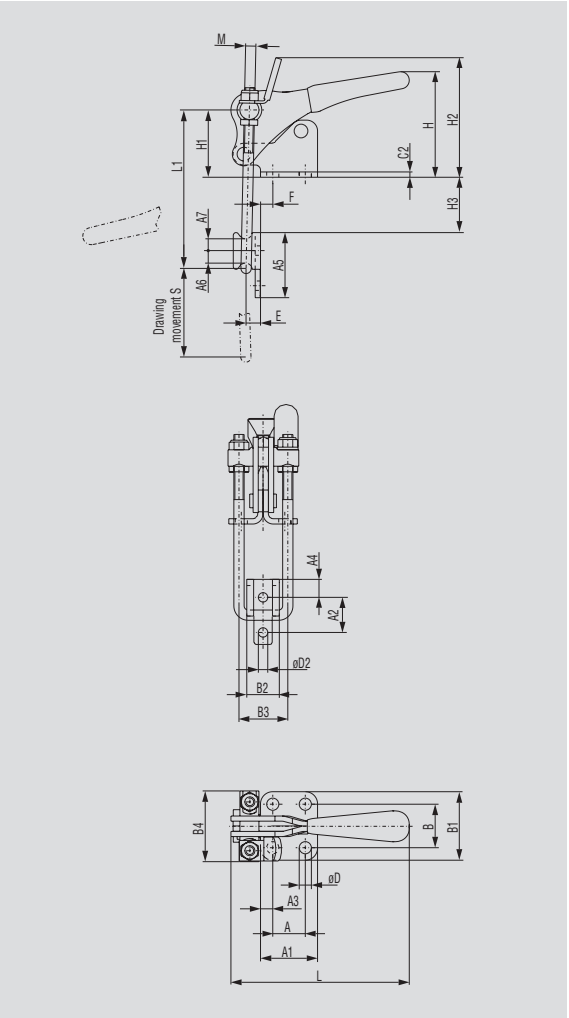

Patented Thumb Lever Control #6,561,556

Patented #6,561,556
For added convenience and functionality, every DE-STA-CO pull action clamp is now equipped with a thumb control lever as a standard feature.

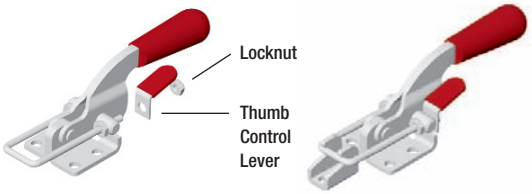

Model no.	A	A1	A2	A3	A4	A5	A6	A7	B	B1
324	0.50	1.00	0.56	0.25	0.28	1.00	0.19	0.19	0.88	1.38
324-M-25	0.50	1.00	0.56	0.25	0.28	1.00	0.19	0.19	0.88	1.38
324-M-50	0.50	1.00	0.56	0.25	0.28	1.00	0.19	0.19	0.88	1.38
324-M-100	0.50	1.00	0.56	0.25	0.28	1.00	0.19	0.19	0.88	1.38
334	0.75	1.31	0.81	0.28	0.41	1.50	0.28	0.28	1.00	1.56
334-M-25	0.75	1.31	0.81	0.28	0.41	1.50	0.28	0.28	1.00	1.56
334-M-50	0.75	1.31	0.81	0.28	0.41	1.50	0.28	0.28	1.00	1.56
334-M-100	0.75	1.31	0.81	0.28	0.41	1.50	0.28	0.28	1.00	1.56
344	1.25	1.94	1.06	0.35	0.69	2.13	0.36	0.39	1.44	2.12
344-M-25	1.25	1.94	1.06	0.35	0.69	2.13	0.36	0.39	1.44	2.12
344-M-50	1.25	1.94	1.06	0.35	0.69	2.13	0.36	0.39	1.44	2.12
344-M-100	1.25	1.94	1.06	0.35	0.69	2.13	0.36	0.39	1.44	2.12

Model no.	Max. Mechanical Advantage (M.A.)	Force Applied to Handle at D
324	31:1	0.250
334	31:1	0.250
344	45:1	0.250

Patented Thumb Lever Control #6,561,556

Model no.	B2	B3	B4	C2	øD	øD2	H	H2	L	L1 max	M	S	E	F	H3 max	H1
324	0.53	0.81	1.19	0.09	0.20	0.17	1.89	1.98	3.50	2.56	M4	1.53	0.19	0.22	0.91	1.10
324-M-25	0.53	0.81	1.19	0.09	0.20	0.17	1.89	1.98	3.50	3.54	M4	1.53	0.19	0.22	1.89	1.10
324-M-50	0.53	0.81	1.19	0.09	0.20	0.17	1.89	1.98	3.50	4.53	M4	1.53	0.19	0.22	2.88	1.10
324-M-100	0.53	0.81	1.19	0.09	0.20	0.17	1.89	1.98	3.50	6.50	M4	1.53	0.19	0.22	4.85	1.10
334	0.68	1.13	1.63	0.12	0.28	0.22	2.39	2.69	4.10	3.70	M6	2.00	0.35	0.19	1.35	1.55
334-M-25	0.68	1.13	1.63	0.12	0.28	0.22	2.39	2.69	4.10	4.68	M6	2.00	0.35	0.19	2.33	1.55
334-M-50	0.68	1.13	1.63	0.12	0.28	0.22	2.39	2.69	4.10	5.67	M6	2.00	0.35	0.19	3.32	1.55
334-M-100	0.68	1.13	1.63	0.12	0.28	0.22	2.39	2.69	4.10	7.64	M6	2.00	0.35	0.19	5.29	1.55
344	1.19	1.75	2.38	0.16	0.34	0.34	3.42	3.10	5.78	5.00	M8	2.50	0.50	0.30	1.93	1.86
344-M-25	1.19	1.75	2.38	0.16	0.34	0.34	3.42	3.10	5.78	5.98	M8	2.50	0.50	0.30	1.93	1.86
344-M-50	1.19	1.75	2.38	0.16	0.34	0.34	3.42	3.10	5.78	6.97	M8	2.50	0.50	0.30	1.93	1.86
344-M-100	1.19	1.75	2.38	0.16	0.34	0.34	3.42	3.10	5.78	8.94	M8	2.50	0.50	0.30	1.93	1.86

Available upon request

Pull action latch clamps – vertical

With U-shaped hook (latch plate sold separately)

Application areas

Ideal for quick closing of covers and flaps on rotating or stationary containers, drums, boxes and molds. These clamps offer a holding capacity of 4,000 lbs.

Product features

Patented thumb control lever

Base and latch plate cast, black oxided

Zinc plated

Partially oil-resistant, ergonomically shaped DE-STA-CO handle grip

Accessories

Latch clamps of this series are delivered complete with U-shaped hooks (latch plates sold separately).

Model 374

Model no.	Holding Capacity [lbs.]	[lbs.]	Adjustment Range
374	4,000	2.10	0-2.03
374-M-25			
374-M-50			
374-M-100			

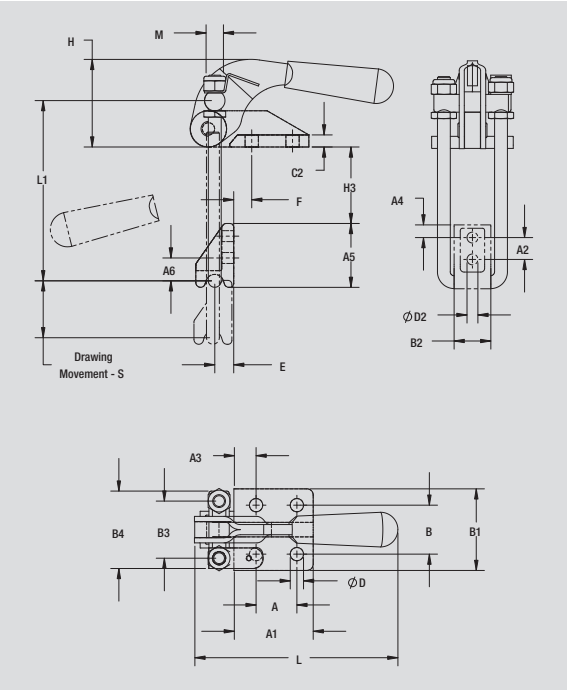

Patented
Thumb Lever Control
#6,561,556

Optional latch plate (374107)

Patented #6,561,556
For added convenience and functionality, every DE-STA-CO pull action clamp is now equipped with a thumb control lever as a standard feature.

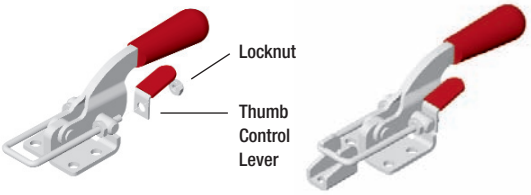

Model no.	A	A1	A2	A3	A4	A5	A6	B	B1	B2	B3	B4	C2	øD	øD2	H	L	L1 max	M	S	E	F	H3 max	H1
374	1.25	2.41	0.67	0.66	0.39	1.96	0.50	1.50	2.50	1.13	1.75	2.36	0.37	0.41	0.33	2.68	6.23	5.52	M10	1.75	0.58	0.55	2.34	1.42
374-M-25	1.25	2.41	0.67	0.66	0.39	1.96	0.50	1.50	2.50	1.13	1.75	2.36	0.37	0.41	0.33	2.68	6.23	6.50	M10	1.75	0.58	0.55	3.32	1.42
374-M-50	1.25	2.41	0.67	0.66	0.39	1.96	0.50	1.50	2.50	1.13	1.75	2.36	0.37	0.41	0.33	2.68	6.23	7.49	M10	1.75	0.58	0.55	4.31	1.42
374-M-100	1.25	2.41	0.67	0.66	0.39	1.96	0.50	1.50	2.50	1.13	1.75	2.36	0.37	0.41	0.33	2.68	6.23	9.46	M10	1.75	0.58	0.55	6.28	1.42

Available upon request

Models 353-35, 353-65

NEW

Information

These robust, heavy-duty cast clamps are designed to withstand the harshest environments of the rotational mold industry. They are ideal for clamping directly on the parting lines of CNC machined molds and are available in carbon or stainless steel. The clamps utilize two stainless steel pivot pins to help eliminate pivot point binding. The curved radius on the mounting flange and keeper plate allows the clamp to fit snugly along the radius of the parting line. The ergonomic handle provides greater operator comfort by reducing the stress on the operator's hands. Models 353-35 and 353-65 are black oxided to help reduce corrosion. The clamps are supplied with a tapered M10X1.5 hex head bolt assembly and keeper plate.

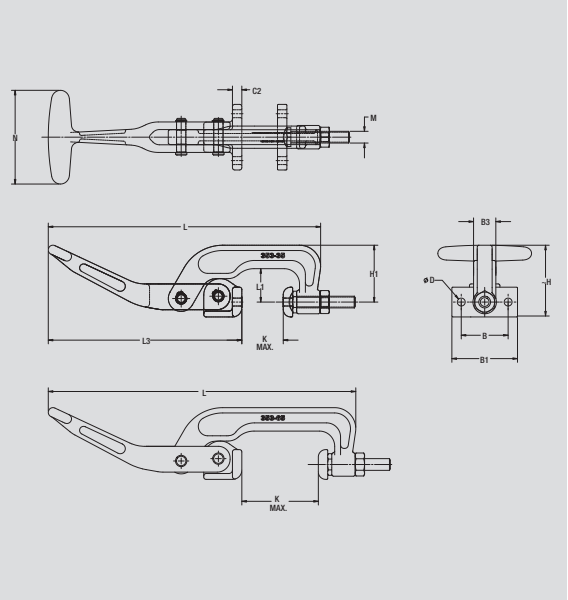

Model no.	Holding Capacity [lbs.]	[lbs.]	Max. Mechanical Adjustment (M.A.)
353-35	2,800	2.10	23:1
353-65	2,100	2.30	27:1

ALSO AVAILABLE		
In Stainless Steel	Model 359-35, 359-65	Page 8.22
See accessories beginning on page 9.1.		

Keeper plate
(353004)

Tapered bolt assembly
(353908)

Model no.	B	B1	B3	C2	øD	~H	H1	K	L	L1	L3	M	N
353-35	1.57	2.20	0.75	0.31	0.27	2.38	1.91	1.39	9.15	1.12	6.50	M10	3.15
353-65	1.57	2.20	0.75	0.31	0.27	2.38	1.91	2.57	10.33	1.12	6.50	M10	3.15

Pull action latch clamps – horizontal

With hook

Application areas

Ideal for quick closing of covers and flaps on rotating or stationary containers, drums, boxes and molds. These clamps offer holding capacities of up to 1,000 lbs.

The models with additional release lever are recommended where vibration of containers, transportation of boxes and drums is present.

Safety instruction

To ensure a secure form of locking, the clamp must be adjusted into the corresponding over-center toggle position.

Product features

Patented thumb control lever
Rivets made of stainless steel
Zinc plated
Oil-resistant, ergonomically shaped DE-STA-CO handle grip

Models 330, 351, 371, 381

Model no.	Holding Capacity ➡ [lbs.]	⚖ [lbs.]	Adjustment Range
330	200	0.24	0-0.25
330-M-25			
330-M-50			
330-M-100			
351	375	0.61	0-0.43
351-M-25			
351-M-50			
351-M-100			
371	750	1.53	0-0.81
371-M-25			
371-M-50			
371-M-100			
381	1,000	2.56	0-0.93
381-M-25			
381-M-50			
381-M-100			

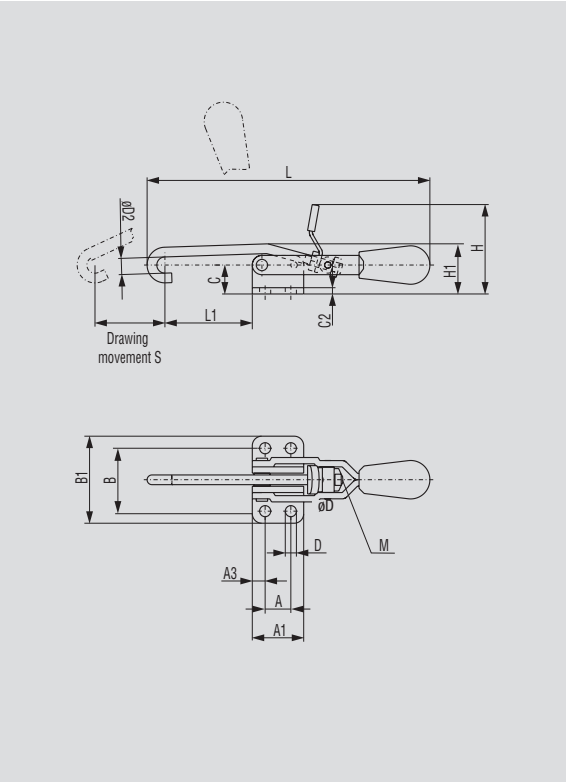

Patented #6,561,556
For added convenience and functionality, every DE-STA-CO pull action clamp is now equipped with a thumb control lever as a standard feature.

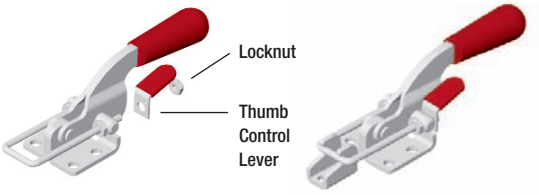

ALSO AVAILABLE		
As DE-STA-CO® Toggle Lock Plus	Models 351-R, 371-R	Page 6.22
In Stainless Steel	Model 330-SS, 351-SS	Page 8.17
	Model 351-BSS	Page 8.17
	Models 371-SS, 381-SS	Page 8.17
Available upon request, as are a number of other modifications		

Model no.	A	A1	A3	B	B1	C	C2	øD	øD2	H	H1	L	L1 max	M	S
330	0.50	1.00	0.25	1.22	1.69	0.56	0.12	0.22	0.32	1.43	0.89	6.04	1.76	M5	2.31
330-M-25	0.50	1.00	0.25	1.22	1.69	0.56	0.12	0.22	0.32	1.43	0.89	7.02	2.74	M5	2.31
330-M-50	0.50	1.00	0.25	1.22	1.69	0.56	0.12	0.22	0.32	1.43	0.89	8.01	3.73	M5	2.31
330-M-100	0.50	1.00	0.25	1.22	1.69	0.56	0.12	0.22	0.32	1.43	0.89	9.98	5.70	M5	2.31
351	0.75	1.50	0.50	1.37	1.93	0.75	0.12	0.22	0.38	1.85	1.35	8.86	2.18	M8	4.00
351-M-25	0.75	1.50	0.50	1.37	1.93	0.75	0.12	0.22	0.38	1.85	1.35	9.04	3.16	M8	4.00
351-M-50	0.75	1.50	0.50	1.37	1.93	0.75	0.12	0.22	0.38	1.85	1.35	10.83	4.15	M8	4.00
351-M-100	0.75	1.50	0.50	1.37	1.93	0.75	0.12	0.22	0.38	1.85	1.35	12.80	6.12	M8	4.00
371	1.25	1.94	0.34	1.94	2.63	1.42	0.16	0.34	0.50	2.38	2.25	11.86	2.81	M10	5.38
371-M-25	1.25	1.94	0.34	1.94	2.63	1.42	0.16	0.34	0.50	2.38	2.25	12.84	3.79	M10	5.38
371-M-50	1.25	1.94	0.34	1.94	2.63	1.42	0.16	0.34	0.50	2.38	2.25	13.83	4.78	M10	5.38
371-M-100	1.25	1.94	0.34	1.94	2.63	1.42	0.16	0.34	0.50	2.38	2.25	16.78	6.75	M10	5.38
381	1.13	2.13	0.50	2.37	3.38	1.81	0.19	0.41	0.62	2.90	2.71	13.45	3.13	M12	6.13
381-M-25	1.13	2.13	0.50	2.37	3.38	1.81	0.19	0.41	0.62	2.90	2.71	14.43	4.11	M12	6.13
381-M-50	1.13	2.13	0.50	2.37	3.38	1.81	0.19	0.41	0.62	2.90	2.71	15.41	5.10	M12	6.13
381-M-100	1.13	2.13	0.50	2.37	3.38	1.81	0.19	0.41	0.62	2.90	2.71	17.39	7.07	M12	6.13
Available upon request															

Model 351-B

Model no.	Holding Capacity [lbs.]	[lbs.]	Adjustment Range
351-B	375	0.61	0-0.43
351-B-M-25			
351-B-M-50			
351-B-M-100			

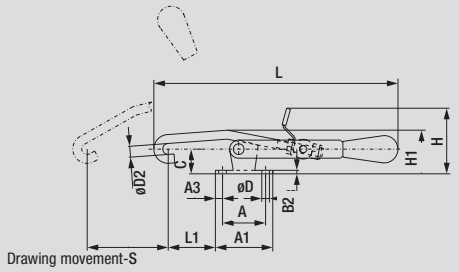

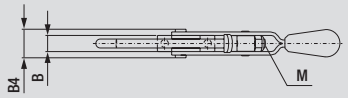

Patented Thumb Lever Control 6,561,556

Patented #6,561,556
For added convenience and functionality, every DE-STA-CO pull action clamp is now equipped with a thumb control lever as a standard feature.

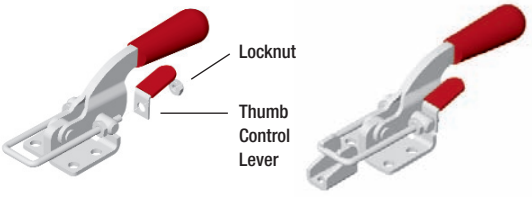

Model no.	A	A1	A3	B	B4	C	C2	øD	øD2	H	H1	L	L1 max	M	S
351-B	1.50	2.00	0.25	0.56	0.95	0.86	0.12	0.27	0.38	1.96	1.46	8.86	1.67	M8	4.00
351-B-M-25	1.50	2.00	0.25	0.56	0.95	0.86	0.12	0.27	0.38	1.96	1.46	9.84	2.65	M8	4.00
351-B-M-50	1.50	2.00	0.25	0.56	0.95	0.86	0.12	0.27	0.38	1.96	1.46	10.83	3.64	M8	4.00
351-B-M-100	1.50	2.00	0.25	0.56	0.95	0.86	0.12	0.27	0.38	1.96	1.46	12.80	5.61	M8	4.00

Available upon request

Models 351-R, 371-R

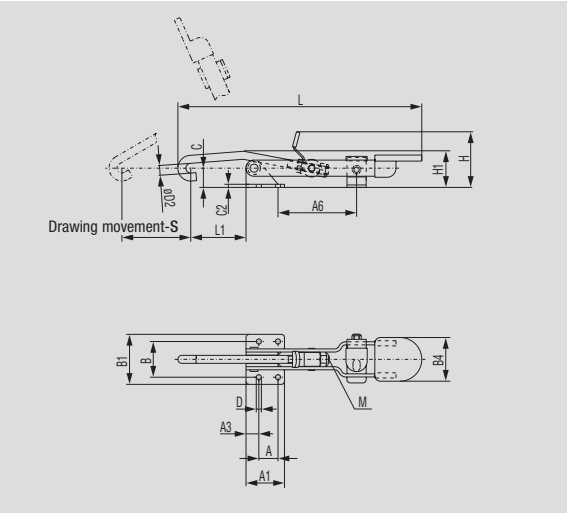

Model no.	Holding Capacity ➡ [lbs.]	⚖ [lbs.]	Adjustment Range
351-R	375	0.61	0-0.43
351-R-M-25			
351-R-M-50			
351-R-M-100			
371-R	750	1.53	0-0.81
371-R-M-25			
371-R-M-50			
371-R-M-100			

Patented #6,561,556
For added convenience and functionality, every DE-STA-CO pull action clamp is now equipped with a thumb control lever as a standard feature.

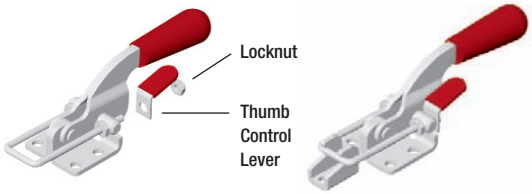

Model no.	A	A1	A3	B	B1	B4	C	C2	øD	øD2	H	H1	L	L1max	M	S
351-R	0.75	1.50	0.50	1.37	1.93	1.71	0.75	0.12	0.22	0.38	1.85	1.42	9.10	2.18	M8	4.00
351-R-M-25	0.75	1.50	0.50	1.37	1.93	1.71	0.75	0.12	0.22	0.38	1.85	1.35	10.08	3.16	M8	4.00
351-R-M-50	0.75	1.50	0.50	1.37	1.93	1.71	0.75	0.12	0.22	0.38	1.85	1.35	11.07	4.15	M8	4.00
351-R-M-100	0.75	1.50	0.50	1.37	1.93	1.71	0.75	0.12	0.22	0.38	1.85	1.35	13.04	6.12	M8	4.00
371-R	1.25	1.94	0.34	1.94	2.63	2.36	1.42	0.16	0.34	0.50	2.38	2.25	12.88	2.83	M10	5.38
371-R-M-25	1.25	1.94	0.34	1.94	2.63	2.36	1.42	0.16	0.34	0.50	2.38	2.25	13.86	3.81	M10	5.38
371-R-M-50	1.25	1.94	0.34	1.94	2.63	2.36	1.42	0.16	0.34	0.50	2.38	2.25	14.85	4.80	M10	5.38
371-R-M-100	1.25	1.94	0.34	1.94	2.63	2.36	1.42	0.16	0.34	0.50	2.38	2.25	16.82	6.77	M10	5.38

Available upon request

Latch clamps 351-R, and 371-R

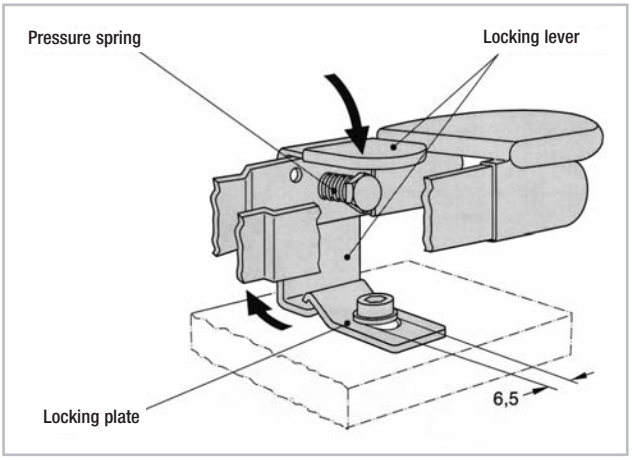

Information concerning the assembly and function of the clamps locking mechanism

The locking plate which is supplied with the unit must be fastened with a screw (M6 or 1/2-20) as shown in this illustration. The screw head should be flat.

Function

When closing the latch clamp, the locking lever engages automatically. Actuate the locking lever to open the clamp.

Notes

NEW

Models 425, 435, 445, 470:
For rugged clamping applications

These new high strength squeeze action clamps are ideal for rugged clamping applications. Clamp strength comes from the high strength steel that is used. The two-way trigger release, which is standard, allows for fast and easy opening of the clamp.

page 7.7

Product group – squeeze action plier clamps

Application areas

In all sectors of industry and manufacturing. Due to the wide range of models, DE-STA-CO plier clamps are used wherever permanent, stationary clamping of workpieces is not possible. DE-STA-CO plier clamps are used in all industries. Opening with the quick release lever makes it very easy to operate these plier clamps.

The essential product features

- Made of drop-forged steel
- Zinc plated
- In some cases with quick release lever
- Oil-resistant, DE-STA-CO vinyl dipped handle grip

Model 453 modified for use in materials testing

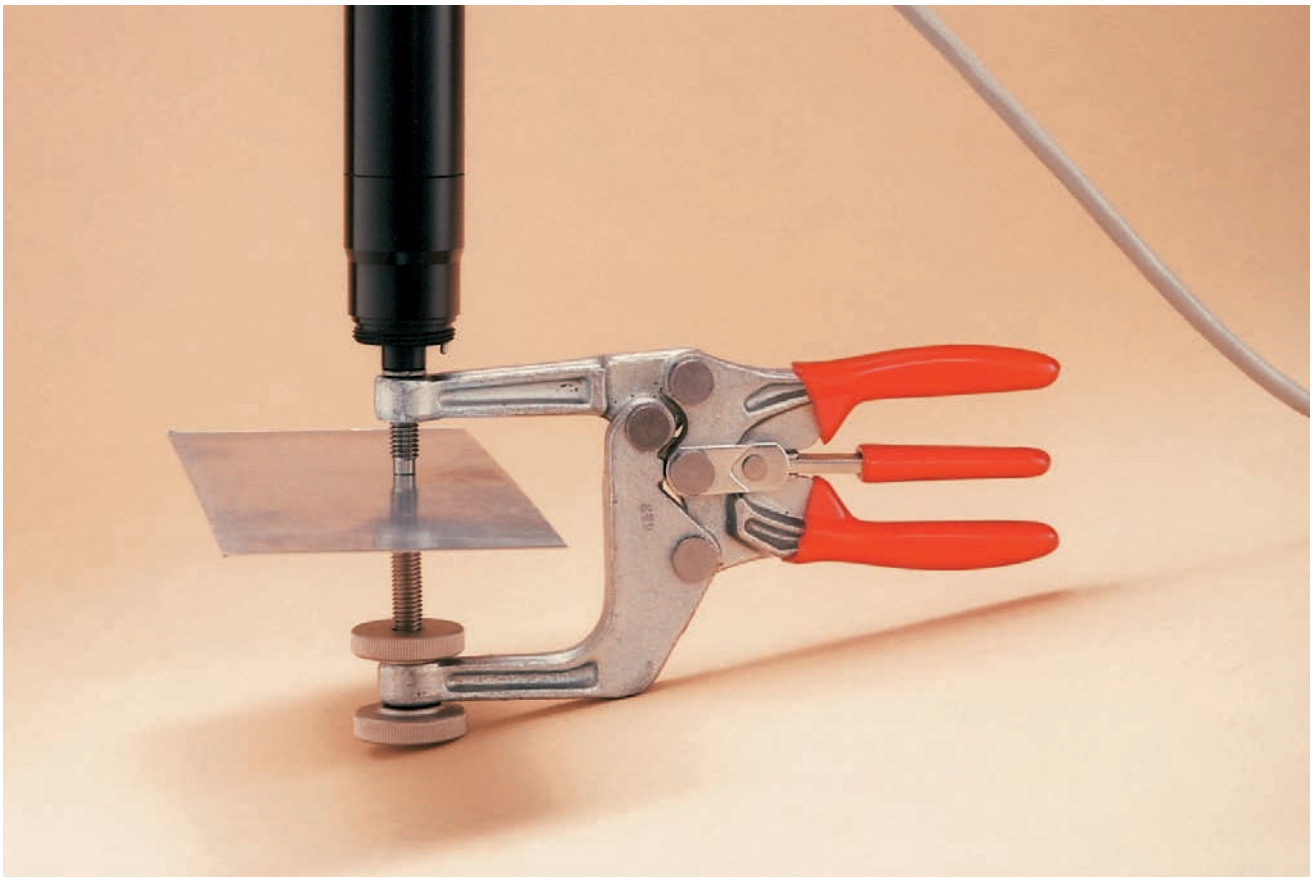

	Model no.	Holding Capacity max. [lbs.]	Category	Page
	325	800		7.4
	345	800		7.5

	Model no.	Holding Capacity max. [lbs.]	Category	Page
	424 441	200 350	Standard Standard	7.6
	424-2 441-2	200 350	Standard Standard	7.6

	Model no.	Holding Capacity max. [lbs.]	Category	Page
	425	500	NEW! Quick Release	7.7
	431 431-2	100 100		7.7
	435	500	NEW! Quick Release	7.8
	443 443-2	500 500		7.8
	445	2,000	NEW! Quick Release	7.9
	462 482	700 1,200	Quick Release Quick Release	7.9
	462-2	700		7.10
	463	700	Quick Release	7.10

	Model no.	Holding Capacity max. [lbs.]	Category	Page
	468	700		7.11
	470	2,000	NEW! Quick Release	7.11
	474	700		7.12
	480	1,200	Modular	7.12
	484	1,200	Quick Release	7.13
	486	1,000	Quick Release	7.13

*Depends on the clamping arm length

Squeeze action plier clamps

Application areas

Designed with dual mounting flexibility. The models listed below can be permantly mounted or used as portable clamps. For example, these models are suitable for the locking of containers, flaps, etc.

Product features

Rivets made of stainless steel
Clamp jaw is drop forged for added strength
Oil-resistant, ergonomically shaped DE-STA-CO handle grip

Model 325

Model no.	Holding Capacity [lbs.]	Jaw Opens +10º	[lbs.]	Standard equipment
325	800	90º	1.18	220203-M
Versions in stainless steel on page 8.1				

Feature

Using the existing mounting holes, this model can also be permantly mounted.

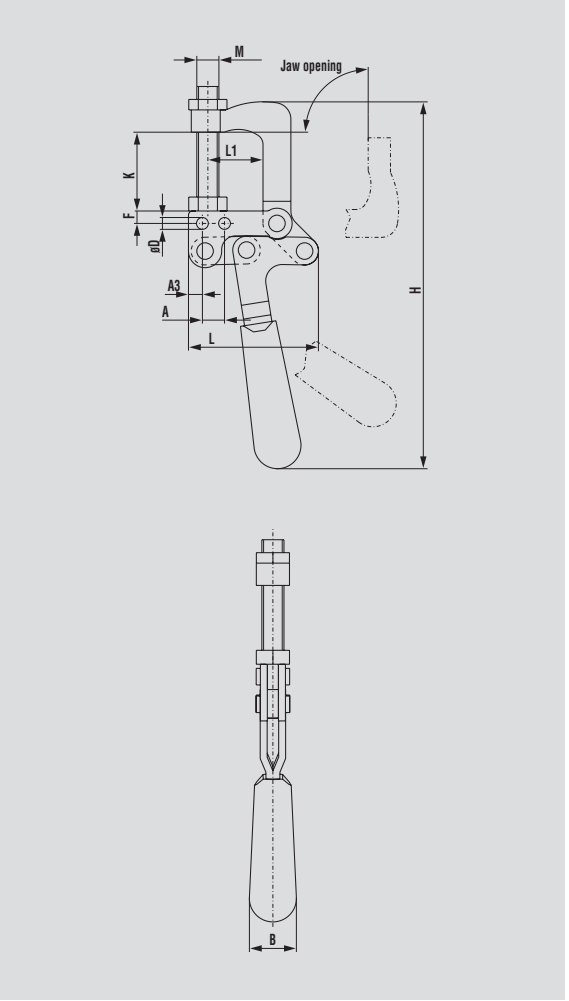

Model no.	A	A3	B	øD	F	H	K	L	L1	M
325	0.50	0.31	1.06	0.27	0.28	8.11	1.78	2.94	1.25	M12

Application areas

Designed for welding or bolting to a fixture at any point along the mounting bar. Can also be used as a portable clamp.

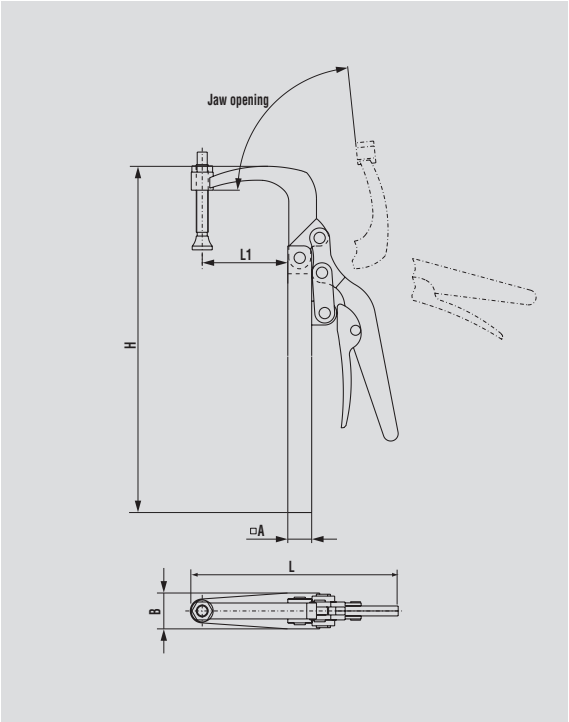

Model no.	Holding Capacity [lbs.]	Jaw Opens +10°	[lbs.]	Standard equipment
345	800	86°	2.52	468206-M

See additional adjustment spindles beginning on page 9.1.

Model 345

Model no.	A	B	H	L	L1	M										
345	0.75	0.69	10.88	6.56	2.69	M10										

Product group – squeeze action plier clamps

Application areas

These high strength squeeze action clamps are ideal for all rugged clamping applications. Clamp strength comes from the high-strength steel that is used.

Models 424, 441

Model no.	Holding Capacity [lbs.]	[lbs.]	Standard equipment
424	200	0.31	424208-M (neoprene tipped)
441	350	0.63	441203-M (hex head)
See additional adjustment spindles beginning on page 9.1.			

Model 424

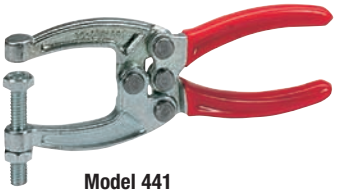

Model 441

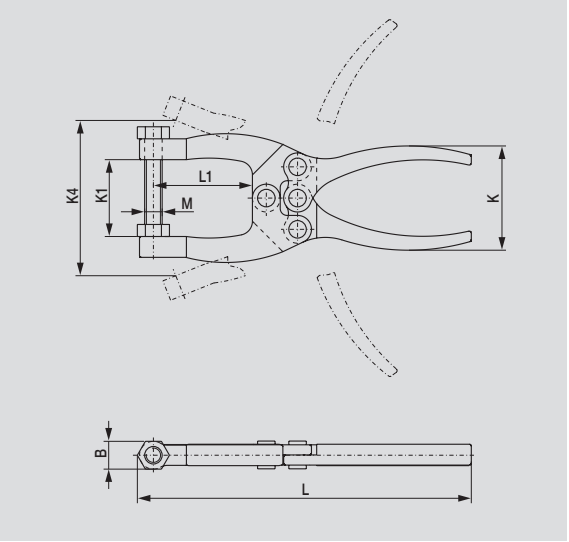

Model no.	B	K	K1	K4	L	L1	M
424	0.66	1.91	1.00	2.06	4.63	1.08	M6
441	0.50	1.97	1.25	2.86	6.06	1.77	M8

Models 424-2, 441-2

Model no.	Holding Capacity [lbs.]	[lbs.]	Standard equipment
424-2	200	0.31	2x 431208-M (neoprene tipped)
441-2	350	0.63	2x 461203-M (hex head)
See additional adjustment spindles beginning on page 9.1			

Model 424-2

Model 441-2

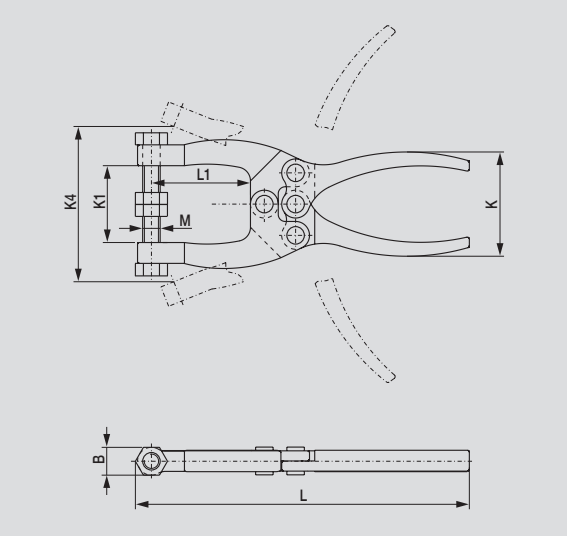

Model no.	B	K	K1	K4	L	L1	M
424-2	0.66	1.91	1.00	2.06	4.63	1.08	M6
441-2	0.50	1.97	1.25	2.86	6.06	1.77	M8

NEW

Model 425

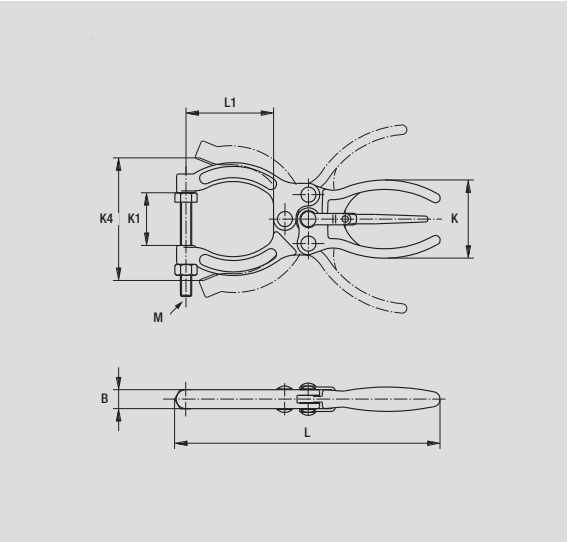

Model no.	Holding Capacity [lbs.]	[lbs.]	Standard equipment
425	500	0.40	205203-M (hex head)

See additional adjustment spindles beginning on page 9.1

Two-way trigger release allows for fast and easy opening of clamp

Model no.	B	K	K1	K4	L	L1	M
425	0.39	1.73	1.10	2.56	5.54	1.83	M6

Models 431, 431-2

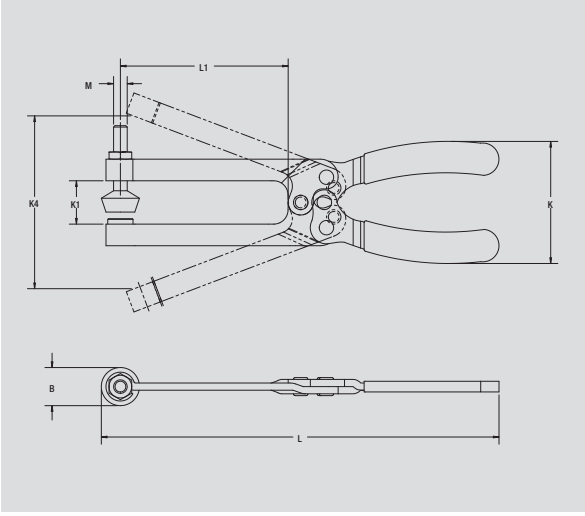

Model no.	Holding Capacity [lbs.]	[lbs.]	Standard equipment
431	100	0.30	424208-M (neoprene tipped)
431-2	100	0.30	2x 431208-M (neoprene tipped)

See additional adjustment spindles beginning on page 9.1

Model 431

Model 431-2

Model no.	B	K	K1	K4	L	L1	M
431	0.66	2.12	0.75	3.06	6.90	2.93	M6
431-2	0.66	2.12	0.75	3.06	6.90	2.93	M6

Available upon request

Model 435

NEW

Model no.	Holding Capacity [lbs.]	[lbs.]	Standard equipment
435	500	0.50	2x 205203-M
See additional adjustment spindles beginning on page 9.1.			

Similar to Model 425 but with wider jaw opening

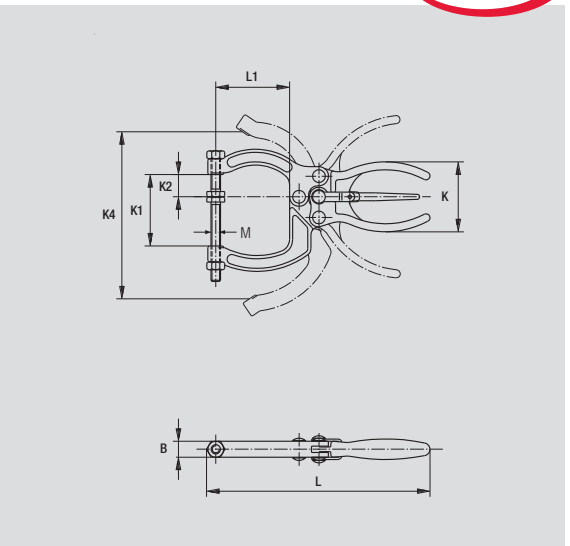

Model no.	B	K	K1	K2	K4	L	L1	M
435	0.39	1.72	1.75	0.55	3.23	5.52	1.83	M6

Model 443

Model no.	Holding Capacity [lbs.]	Jaw Opens +10°	[lbs.]	Standard equipment
443	500	64°	0.75	441203-M (hex head)
See additional adjustment spindles beginning page 9.1.				

Model 443

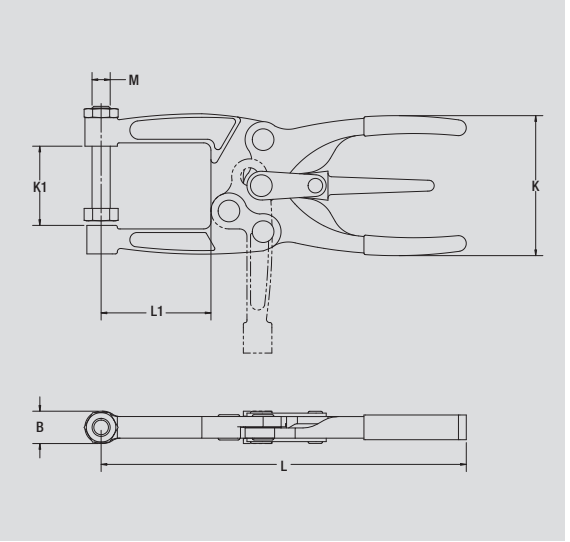

Model no.	B	K	K1	L	L1	M
443	0.56	2.47	1.39	6.70	1.88	M8
Available upon request						

NEW

Model 445

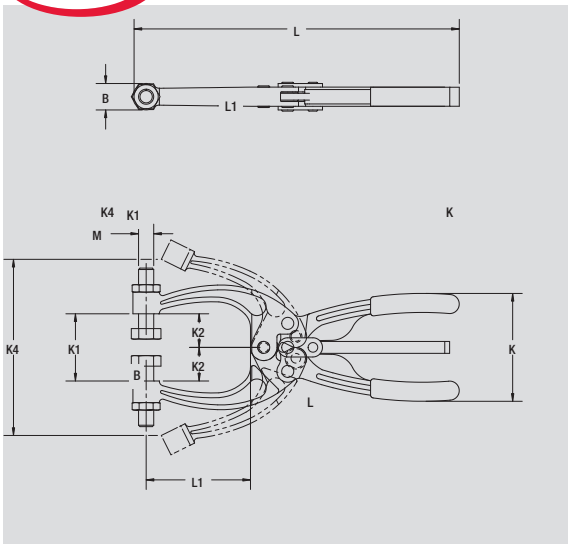

Model no.	Holding Capacity [lbs.]	[lbs.]	Standard equipment
445	2,000	1.60	210203-M (hex head)

See additional adjustment spindles beginning on page 9.1.

Model no.	B	K	K1	K4	L	L1	M
445	0.63	2.00	2.09	4.41	8.27	2.76	M10

Models 462, 482

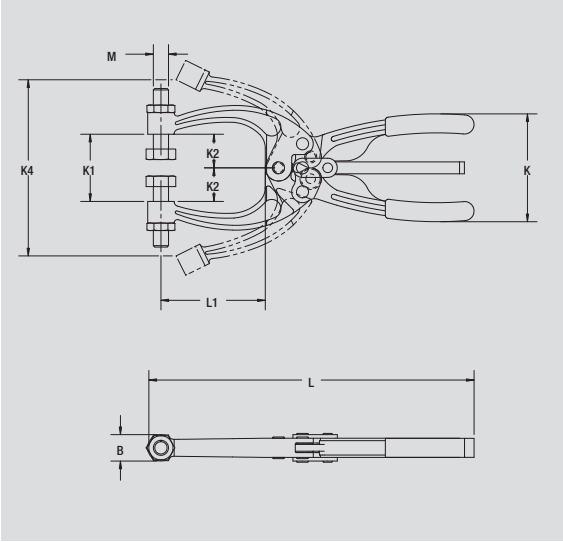

Model no.	Holding Capacity [lbs.]	[lbs.]	Standard equipment
462	700	1.13	468206-M (swivel foot)
482	1,200	1.75	468206-M (swivel foot)

See additional adjustment spindles beginning on page 9.1.

Model 462/482

Model no.	B	K	K1	K4	L	L1	M
462	0.69	2.81	1.75	4.10	8.50	2.72	M10
482	0.69	2.80	1.70	4.06	9.19	2.56	M10

Model 462-2

Model no.	Holding Capacity [lbs.]	[lbs.]	Standard equipment
462-2	700	1.13	2x 491203-M (hex head)
See additional adjustment spindles beginning on page 9.1.			

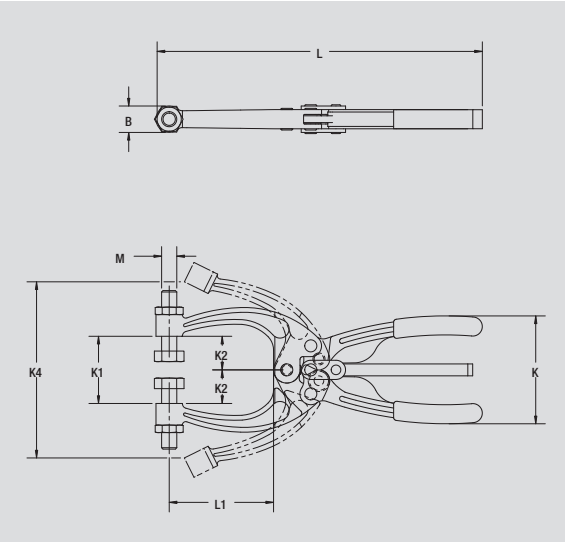

Model no.	B	K	K1	K2	K4	L	L1	M
462-2	0.69	2.81	1.75	0.88	4.10	8.50	2.72	M10

Model 463

Model no.	Holding Capacity [lbs.]	[lbs.]	Standard equipment
463	700	1.19	468206-M 210203-M
See additional adjustment spindles beginning on page 9.1.			

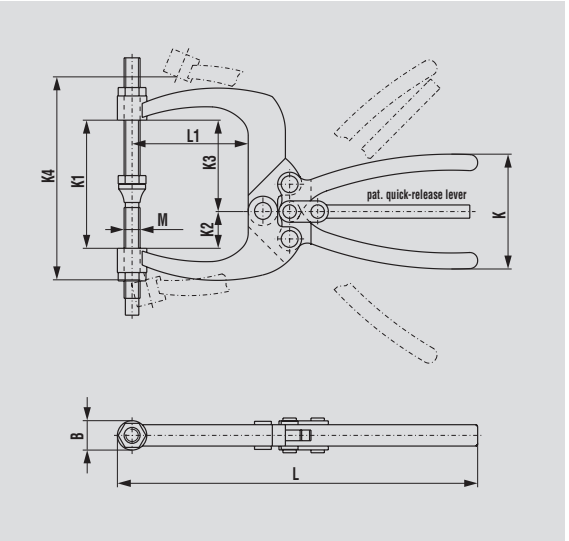

Model no.	B	K	K1	K2	K3	K4	L	L1	M
463	0.69	2.81	3.00	0.88	2.13	4.75	8.50	2.72	M10

Model 468

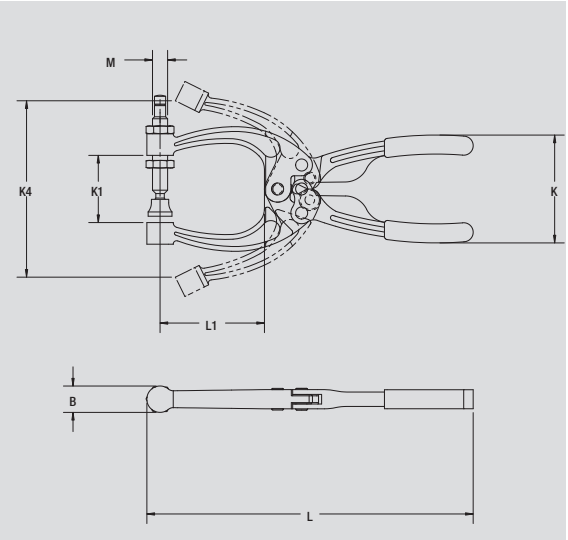

Model no.	Holding Capacity [lbs.]	[lbs.]	Standard equipment
468	700	1.00	468206-M (swivel foot)
See additional adjustment spindles beginning on page 9.1.			

Same as Model 462 except without trigger release

Model no.	B	K	K1	K4	L	L1	M								
468	0.69	2.66	1.75	4.10	8.47	2.75	M10								
Available upon request															

NEW

Model 470

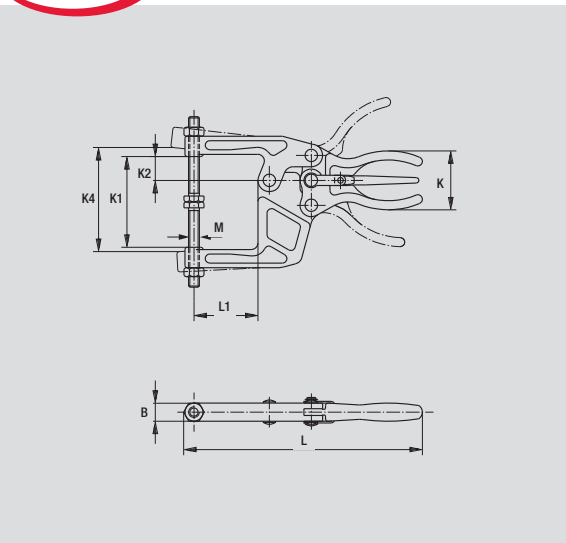

Model no.	Holding Capacity [lbs.]	[lbs.]	Standard equipment
470	2,000	1.90	2x 210203-M (hex head)
See additional adjustment spindles beginning on page 9.1.			

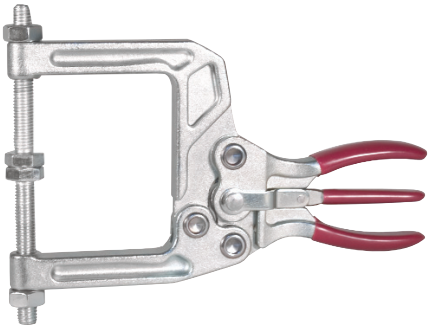

Model no.	B	K	K1	K2	K4	L	L1	M							
470	0.63	2.00	3.35	0.91	5.63	8.27	2.76	M10							

Model 474

Model no.	Holding Capacity [lbs.]	[lbs.]	Standard equipment
474	700	1.00	468206-M (swivel foot) 210203-M (hex head)
See additional adjustment spindles beginning on page 9.1.			

Same as Model 463 except without trigger release

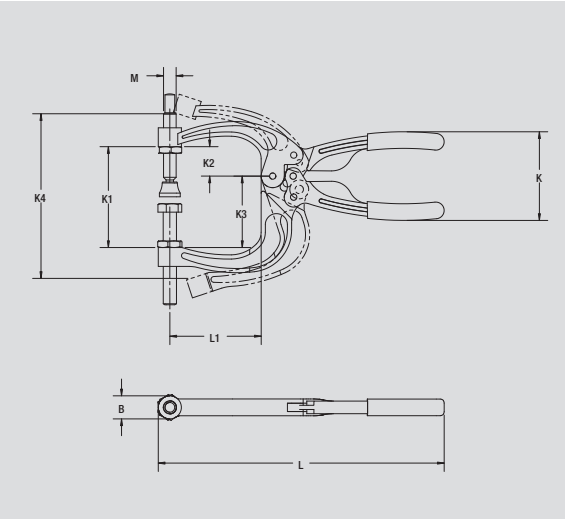

Model no.	B	K	K1	K2	K3	K4	L	L1	M
474	0.69	2.81	3.00	0.86	2.13	4.75	8.50	2.72	M10
Available upon request									

Model 480

Model no.	Holding Capacity [lbs.]	[lbs.]
480	1,200 with 2.56 Jaw Extension	1.31
See additional adjustment spindles beginning on page 9.1.		

Model 480

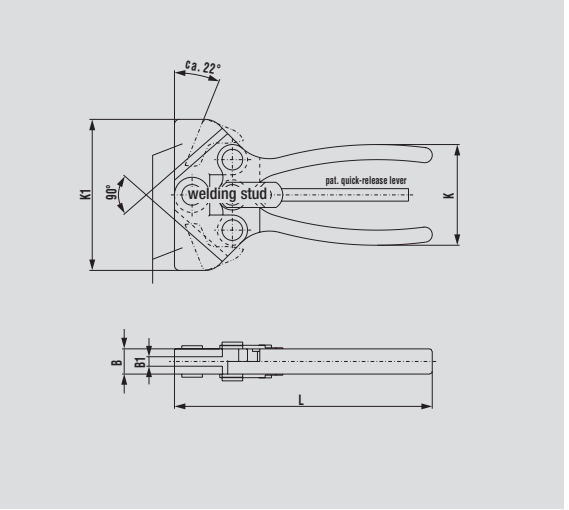

Typical Application

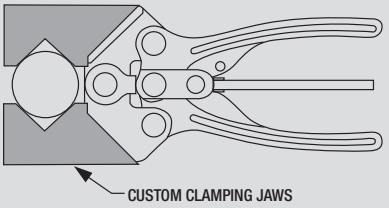

Model no.	B	B1	K	K1	L
480	0.63	0.23	2.61	3.75	6.19
Available upon request					

Model 484

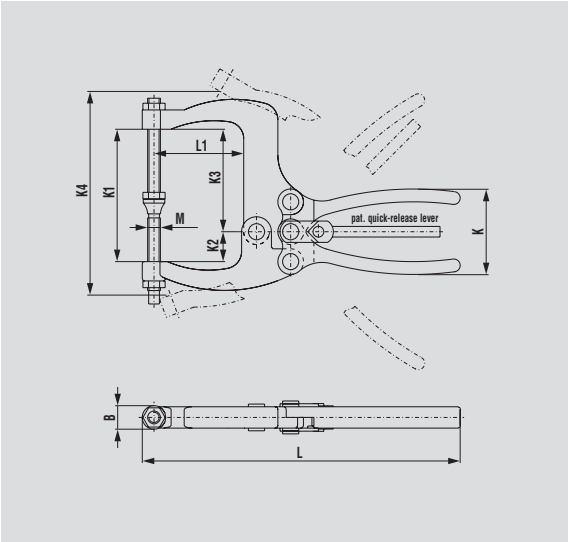

Model no.	Holding Capacity [lbs.]	[lbs.]	Standard equipment
484	1,200	2.00	468206-M (swivel foot) 210203-M (hex head)
See additional adjustment spindles beginning on page 9.1.			

Model no.	B	K	K1	K2	K3	K4	L	L1	M
484	0.69	2.69	3.83	0.87	2.95	6.00	9.06	2.56	M10

Model 486

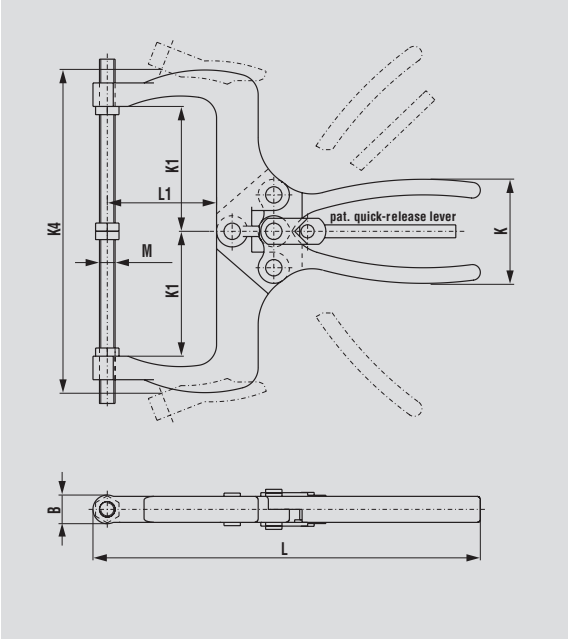

Model no.	Holding Capacity [lbs.]	[lbs.]	Standard equipment
486	1,000	2.31	2x 240203-M (hex head)
See additional adjustment spindles beginning on page 9.1.			

Model no.	B	K	K1	K4	L	L1	M
486	0.69	2.88	3.00	8.00	9.22	2.56	M10

Notes

NEW

Model 6001-MSS: 50% higher holding capacity

Very compact plunger clamp with the flexibility of side mounting. Ideal for use in the electronics industry, precision mechanics, food industry and much more.

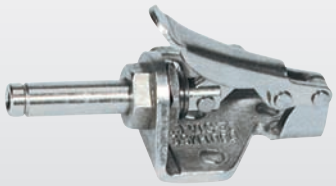

page 8.12

NEW

Models 603-MSS, 603-SS in stainless steel

The popular 603 plunger clamp is now available in stainless steel. This plunger clamp can now be used in applications where the normal zinc plated version might corrode.

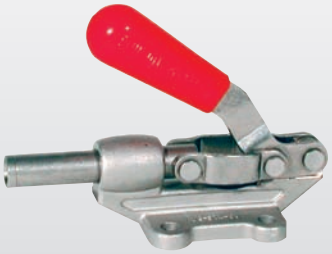

page 8.13

NEW

Model 6015-MSS: Compact clamp in stainless steel

Model 6015-MSS is the smallest of the straight-line, machined-cast base clamps. Its compact size allows it to be used in confined areas and on small fixtures. Handles are red vinyl dipped for greater operator comfort.

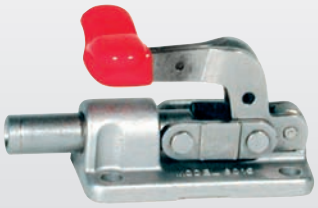

page 8.14

NEW

Model 3011-SS

page 8.21

NEW

Models 359-35, 359-65

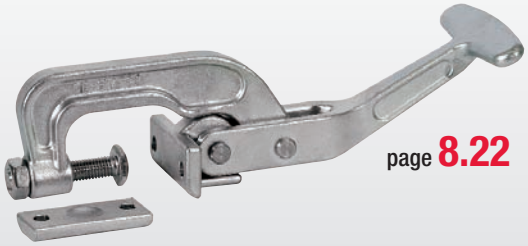

page 8.22

Product group – stainless steel clamps

Application areas

DE-STA-CO toggle clamps made of stainless steel are resistant to corrosion and chemicals. These clamps are recommended for use in the chemical and food industries.

The essential product features

- Corrosion-resistant and heat-resistant steel
- Smooth surfaces without burrs
- Rivets made of stainless steel

Model 225-USS during service use in the chemical industry

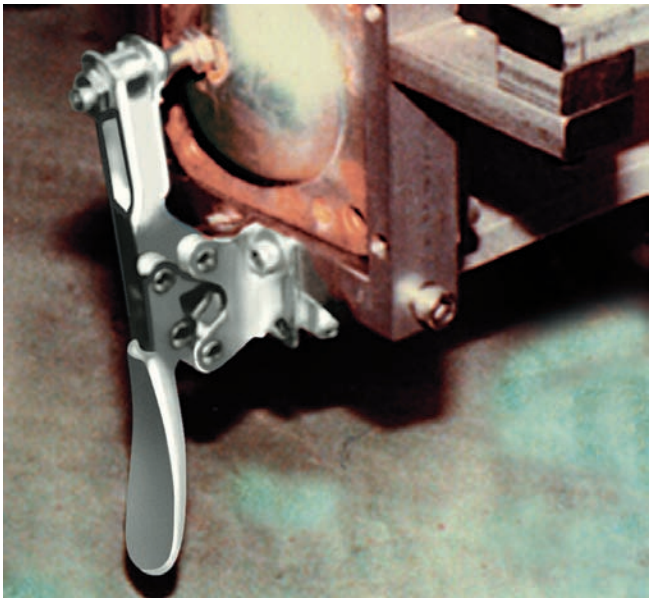

	Model no.	Holding Capacity max. [lbs.]	Category	Page
	201-USS 202-USS 207-USS 210-USS	125 250 450 750	Vertical Vertical Vertical Vertical	8.4
	202-SS	250	Vertical	8.5
	202-UBSS	250	Vertical	8.6
	205-SSS 205-USS 215-USS 225-USS 235-USS	75 75 250 600 850	Horizontal Horizontal Horizontal Horizontal Horizontal	8.7
	206-SS 206-HSS	100 100	Horizontal Horizontal	8.8

	Model no.	Holding Capacity max. [lbs.]	Category	Page
	213-USS 217-USS 227-USS 237-USS	150 250 600 800	Horizontal Horizontal Horizontal Horizontal	8.9
	225-UBSS	600	Horizontal	8.10
	305-USS 307-USS 309-USS	200 350 750	Compact Compact Compact	8.10
	601-SS 601-OSS	100 100	Straight-line Straight-line	8.11
	6001-MSS	150	Straight-line	8.12

	Model no.	Holding Capacity max. [lbs.]	Category	Page
	603-SS 603-MSS	840 840	Straight-line Straight-line	8.13
	602-SS 604-SS 604-MMSS 624-SS	200 400 400 700	Straight-line	8.13
	6015-MSS	630	Straight-line	8.14
	323-SS 331-SS 341-SS	360 700 2,000	Latch Latch Latch	8.15
	331-RSS 341-RSS	700 2,000	DE-STA-CO® Toggle Lock Plus Latch DE-STA-CO® Toggle Lock Plus Latch	8.16
	385-V2A	7,500	Latch	8.16
	324-SS 334-SS 344-SS	500 1,000 2,000	Latch Latch Latch	8.17
	330-SS 351-SS 371-SS 381-SS	200 450 750 1,000	Latch Latch Latch Latch	8.18

	Model no.	Holding Capacity max. [lbs.]	Category	Page
	351-BSS	375	Latch	8.18
	325-SS	800	Squeeze	8.19
	301-SS	450	Latch	8.20
	3011-SS	2,000	Latch	8.21
	359-35 359-65	1,400 1,200	Parting Line Clamp	8.22

Stainless steel: vertical clamps

U-shaped clamping bar
Flanged bases

Application areas

DE-STA-CO toggle clamps made of stainless steel are resistant to corrosion and chemicals. These clamps are recommended for use in the chemical and food industries.

Product features

Corrosion-resistant and heat-resistant steel
Smooth surfaces without burrs
Rivets made of stainless steel
Oil-resistant, ergonomically shaped DE-STA-CO handle grip

Accessories

Vertical clamps in stainless steel versions are generally delivered with standard adjustment spindles made of stainless steel.

Models 201-USS, 202-USS, 207-USS, 210-USS

Model no.	Holding Capacity [lbs.]	Bar Opening +10°	[lbs.]	Standard equipment	Flanged Washers
201-USS	125	110°	0.15	201943	102911
202-USS	250	104°	0.35	202943	215905
207-USS	450	115°	0.70	509907-M	507907
210-USS	750	106°	1.29	237943	235906

See additional adjustment spindles beginning on page 9.1.

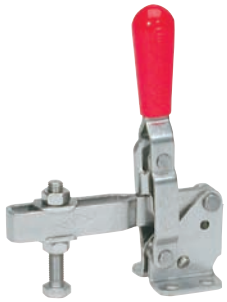

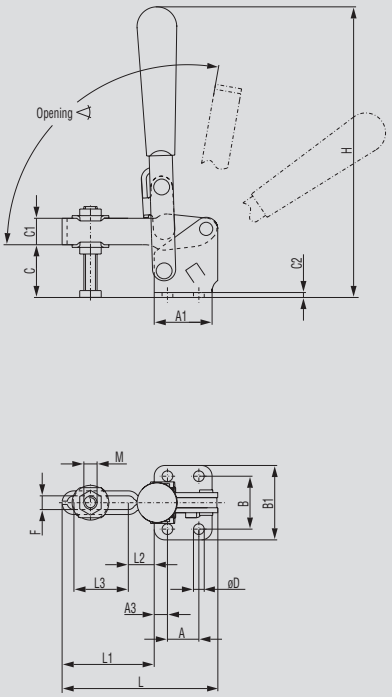

Model no.	A	A1	A3	B	B1	C	C1	C2	øD	F	H	L	L1	L2	L3	M
201-USS	0.63	1.00	.19	0.94	1.31	0.63	0.31	0.08	0.17	0.21	3.03	2.02	1.02	0.13	0.73	M5 or #10
202-USS	0.50	1.00	0.26	1.06	1.56	0.94	0.38	0.12	0.22	0.25	4.21	2.72	1.72	0.51	0.98	M6 or 1/4
207-USS	0.75	1.38	0.31	1.25	1.75	1.25	0.63	0.11	0.28	0.33	5.63	4.41	3.06	0.50	1.96	M8 or 5/16
210-USS	1.25	1.91	0.31	1.78	2.53	1.67	0.79	0.11	0.33	0.40	7.58	5.53	3.63	0.94	2.56	M10 or 3/8

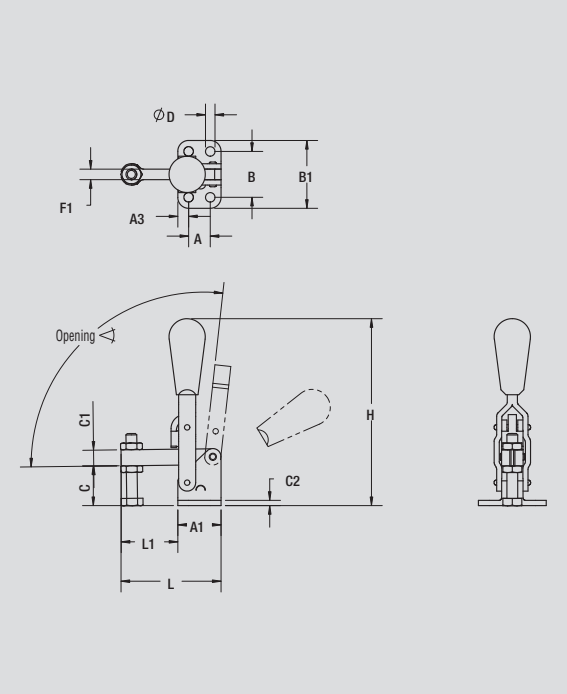

Model no.	Holding Capacity [lbs.]	Bar Opening +10º	[lbs.]	Standard equipment	Flanged Washers
202-SS	250	104º	0.33	202943	215905
Additional adjustment spindles are listed from page 9.1 forward.					

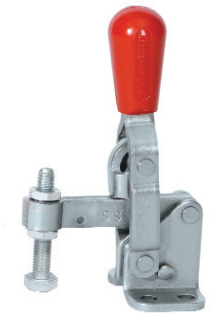

Model no.	A	A1	A3	B	B1	C	C1	C2	øD	F1	H	L	L1	L2				
202-SS	0.50	1.00	0.25	1.06	1.57	0.95	0.37	0.12	0.22	0.24	4.33	2.31	1.31	1.09				

Model 202-UBSS

Model no.	Holding Capacity [lbs.]	Bar Opening +10º	[lbs.]	Standard equipment	Flanged Washers
202-UBSS	250	104º	0.35	202943	215905

See additional adjustment spindles beginning on page 9.1.

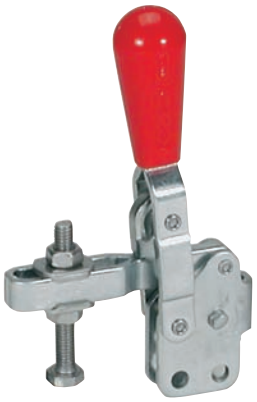

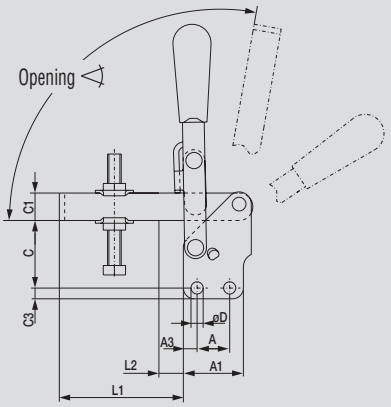

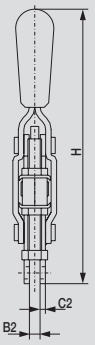

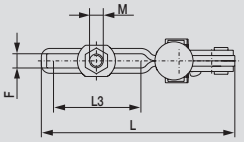

Model no.	A	A1	A3	B2	C	C1	C2	C3	øD	F	H	L	L1	L2	L3	M
202-UBSS	0.50	1.00	0.26	0.24	1.13	0.38	0.12	0.12	0.22	0.25	4.40	2.73	1.73	0.51	0.98	M6 or 1/4

Available upon request

U-shaped or fixed clamping bar

Flanged bases

Application areas

DE-STA-CO toggle clamps made of stainless steel are resistant to corrosion and chemicals. These clamps are recommended for use in the chemical and food industries.

Product features

Corrosion-resistant and heat-resistant steel
Smooth surfaces without burrs
Rivets made of stainless steel
Oil-resistant, ergonomically shaped DE-STA-CO handle grip (except for models 205-SSS and 205-USS)

Accessories

Horizontal and compact clamps in stainless steel versions are generally delivered with standard adjustment spindles made of stainless steel.

Models 205-SSS, 205-USS, 215-USS, 225-USS, 235-USS

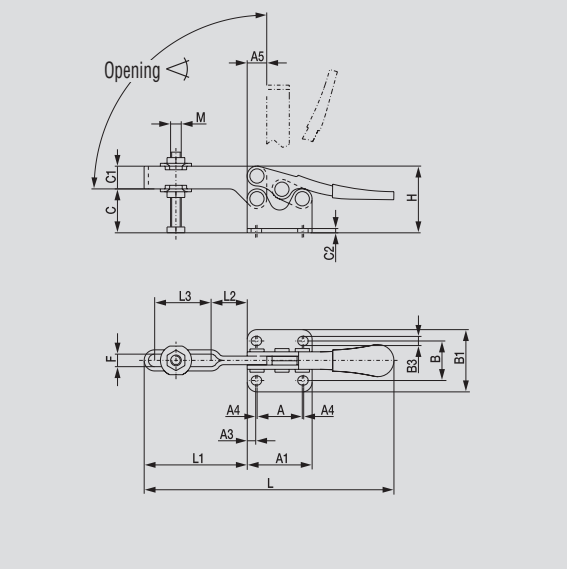

Model no.	Holding Capacity [lbs.]	Bar Opening +10°	[lbs.]	Standard equipment	Flanged Washers
205-SSS	75	90°	0.06	205943	105906
205-USS	75	90°	0.06	205943	105906
215-USS	250	90°	0.34	202943	215905
225-USS	600	90°	0.55	207943	507907
235-USS	850	90°	1.47	237943	235906

See additional adjustment spindles beginning on page 9.1.

Model 205-USS

Model 205-SSS

Model 215-USS

Model no.	A	A1	A3	A4	A5	B	B1	B3	C	C1	C2	F	H	L	L1	M
205-SSS	0.44	0.94	0.16	0.63	0.30	0.62	0.93	0.17	0.37	0.12	0.06	0.17	0.67	2.78	0.88	M4 or 10-32
205-USS	0.44	0.94	0.16	0.63	0.22	0.62	0.93	0.17	0.31	0.26	0.06	0.20	0.67	2.65	0.74	M4 or 10-32
215-USS	1.00	1.44	0.19	1.06	0.43	0.88	1.37	0.20	1.00	0.49	0.10	0.28	1.53	5.50	2.25	M6 or 1/4
225-USS	1.00	1.50	0.25	–	0.49	0.88	1.38	0.30	1.32	0.49	0.12	0.31	1.84	6.70	2.72	M8 or 5/16
235-USS	1.63	2.25	0.37	–	0.69	1.63	2.25	0.34	1.75	0.75	0.16	0.43	2.55	10.87	4.16	M10 or 3/8

Models 206-SS, 206-HSS

NEW

Model no.	Holding Capacity [lbs.]	Bar Opening +10°	[lbs.]	Standard equipment	Flanged Washers
206-SS	100	90°	0.07	205943	105906
206-HSS	100	90°	0.07	205943	105906

See additional adjustment spindles beginning on page 9.1.

Model 206-SS

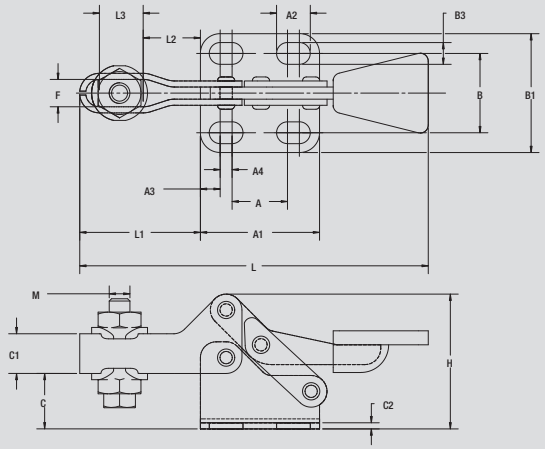

Model 206-SS

Model 206-HSS

Model 206-HSS

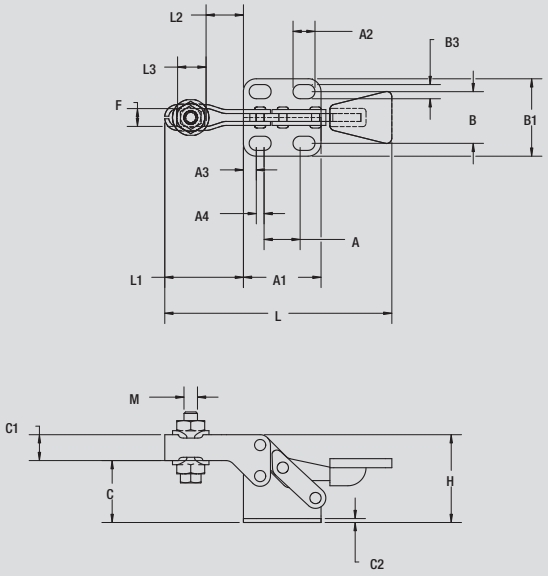

Model no.	A	A1	A2	A3	A4	B	B1	B3	C	C1	C2	F	H	L	L1	L2	L3	M
206-SS	0.44	0.94	0.27	0.16	0.53	0.63	0.94	0.17	0.44	0.31	0.05	0.22	1.06	2.75	0.95	0.45	0.35	8-32
206-HSS	0.44	0.94	0.27	0.16	0.53	0.63	0.94	0.17	0.75	0.31	0.05	0.22	1.06	2.75	0.95	0.45	0.35	8-32

Models 213-USS, 217-USS, 227-USS, 237-USS

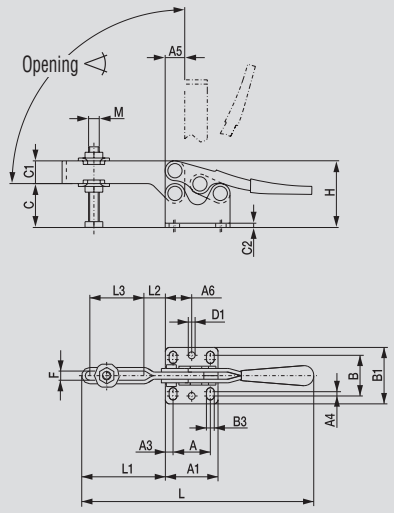

hole pattern 213-USS, 217-USS, 227-USS, 237-USS

Model no.	Holding Capacity [lbs.]	Bar Opening +10°	[lbs.]	Standard equipment	Flanged Washers
213-USS	150	90°	0.17	201943	102911
217-USS	250	92°	0.40	202943	215905
227-USS	600	92°	0.68	207943	507907
237-USS	850	92°	1.60	237943	235906
See additional adjustment spindles beginning on page 9.1.					

Model 217-USS – 237-USS

Model no.	A	A1	A2	A3	A5	A6	B	B1	B3	C	C1	C2	øD1	F	H	L	L1	L2	L3	M
213-USS	0.53	1.00	0.17	0.24	0.12	–	0.70	1.06	0.06	0.72	0.37	0.08	–	0.22	1.39	4.12	1.42	0.39	0.85	M5 or #8
217-USS	1.03	1.47	0.22	0.22	0.20	0.73	1.19	1.62	0.12	0.97	0.49	0.10	0.19	0.26	1.95	6.56	2.34	0.59	1.50	M6 or 1/4
227-USS	1.03	1.56	0.27	0.28	0.02	0.79	1.22	1.70	0.10	1.30	0.57	0.12	0.19	0.33	2.43	7.56	2.68	0.79	1.52	M8 or 5/16
237-USS	1.63	2.25	0.34	0.31	0.30	1.12	1.69	2.25	0.08	1.62	0.75	0.16	0.23	0.41	3.20	10.67	4.06	0.96	2.75	M10 or 3/8

Available upon request

Safety Distance
Exclusive handle design gives more hand clearance between bar and handle when clamp is in fully open position.

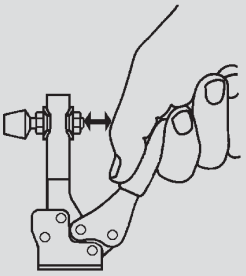

Model 225-UBSS

Model no.	Holding Capacity [lbs.]	Bar Opening +10°	[lbs.]	Standard equipment	Flanged Washers
225-UBSS	600	90°	0.55	207943	507907
See additional adjustment spindles beginning on page 9.1.					

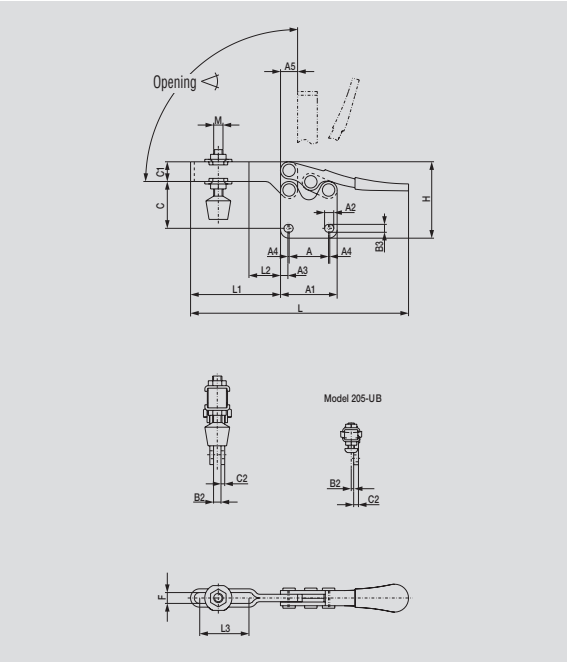

Model no.	A	A1	A3	A5	B3	C	C1	C2	F	H	L	L1	L2	L3	M		
225-UBSS	1.00	1.50	0.25	0.49	0.27	1.83	0.49	0.24	0.31	2.38	6.70	2.72	1.08	1.39	M8 or 5/16		
Available upon request																	

Models 305-USS, 307-USS, 309-USS

Model no.	Holding Capacity [lbs.]	Bar Opening +10°	[lbs.]	Standard equipment	Flanged Washers
305-USS	200	92°	0.13	201943	102911
307-USS	350	92°	0.54	207943	507907
309-USS	750	92°	1.30	237943	235906
See additional adjustment spindles beginning on page 9.1.					

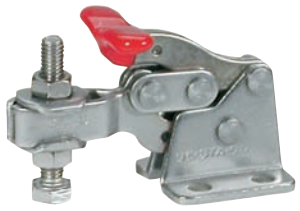

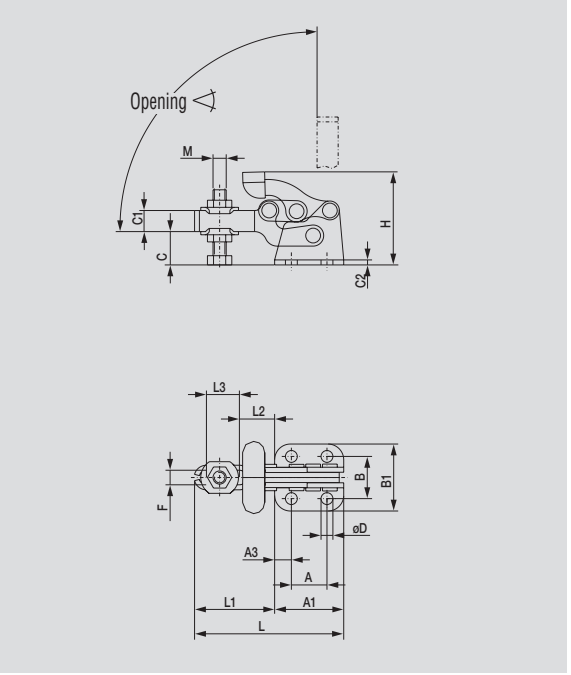

Model no.	A	A1	A3	B	B1	C	C1	C2	øD	F	H	L	L1	L2	L3	M	
305-USS	0.53	1.03	0.26	0.63	1.00	0.50	0.31	0.08	0.18	0.22	1.38	2.22	1.19	0.53	0.50	M5 or #10	
307-USS	0.91	1.72	0.41	1.16	1.80	0.87	0.49	0.12	0.28	0.31	2.40	3.60	1.88	0.87	0.80	M8 or 5/16	
309-USS	1.38	2.52	0.57	1.50	2.47	1.30	0.75	0.12	0.33	0.41	3.55	5.18	2.66	1.24	1.06	M10 or 3/8	

Stainless steel: straight-line action clamps

Application areas

DE-STA-CO toggle clamps made of stainless steel are resistant to corrosion and chemicals. These clamps are recommended for use in the chemical and food industries.

Product features

Corrosion-resistant and heat-resistant steel
Smooth surfaces without burrs
Rivets made of stainless steel
Oil-resistant, ergonomically shaped DE-STA-CO plastic handle grip (except for model 601-SS, 601-0SS and 6001-MSS)

Models 601-SS, 601-0SS

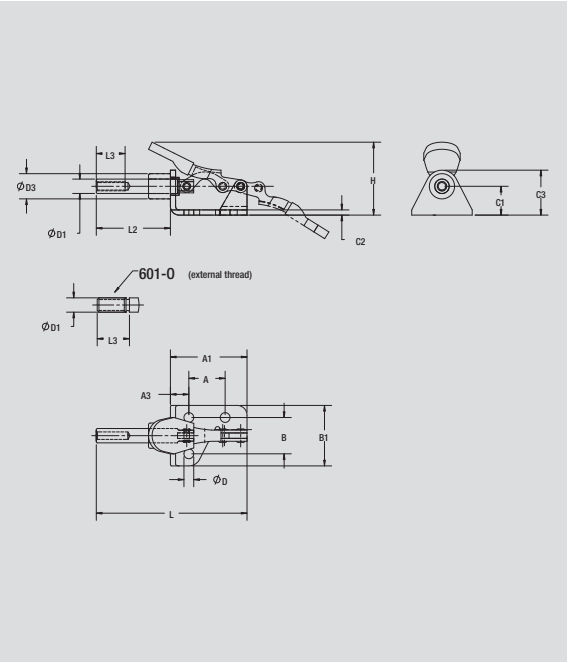

Model no.	Holding Capacity [lbs.]	Plunger Travel	[lbs.]	Standard equipment	Plunger Thread
601-SS	100	0.63	0.09	205943	8-32
601-0SS	100	0.63	0.13	None	1/4-20

Locks in both extended and retracted positions
Allow handle to fall below plane level to lock in retracted position

Model 601-SS

Model 601-0SS

Model no.	A	A1	A3	B	B1	C1	C2	C3	øD	øD1	øD3	H	L	L2	L3
601-SS	0.63	1.33	0.32	0.63	1.05	0.50	0.09	0.78	0.17	0.25	0.44	1.27	2.62	1.29	0.50
601-0SS	0.63	1.33	0.32	0.63	1.05	0.50	0.09	0.78	0.17	0.25	–	1.27	2.86	1.53	0.56

Model 6001-MSS

NEW

Model no.	Holding Capacity [lbs.]	Plunger Travel	[lbs.]	Standard equipment	Plunger Thread (M)
6001-MSS	150	0.63	0.12	102908-M	M4
See additional adjustment spindles beginning on page 9.1.					

Locks in both extended and retracted positions

Allow handle to fall below plane level to lock in retracted position

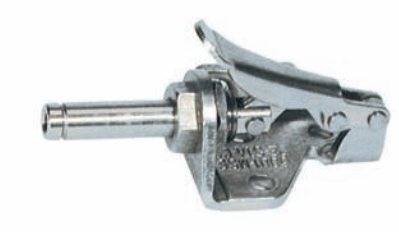

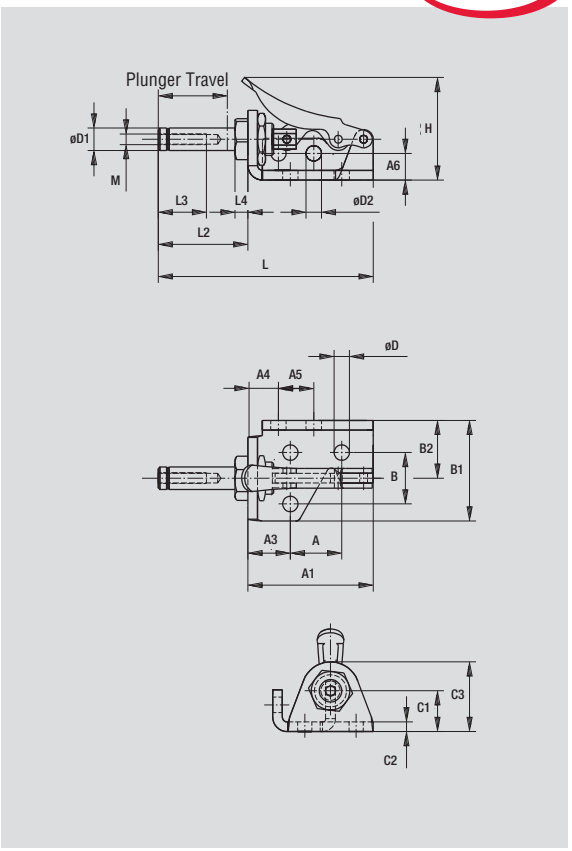

Model no.	A	A1	A3	A4	A5	A6	B	B1	B2	C1	C2	C3	øD	øD1	øD2	H	L	L2	L3	L4
6001-MSS	0.63	1.54	0.52	0.37	0.43	0.33	0.63	1.23	0.71	0.50	0.12	0.85	0.19	0.28	0.19	1.30	2.63	1.10	0.59	0.16

NEW

Models 603-SS, 603-MSS

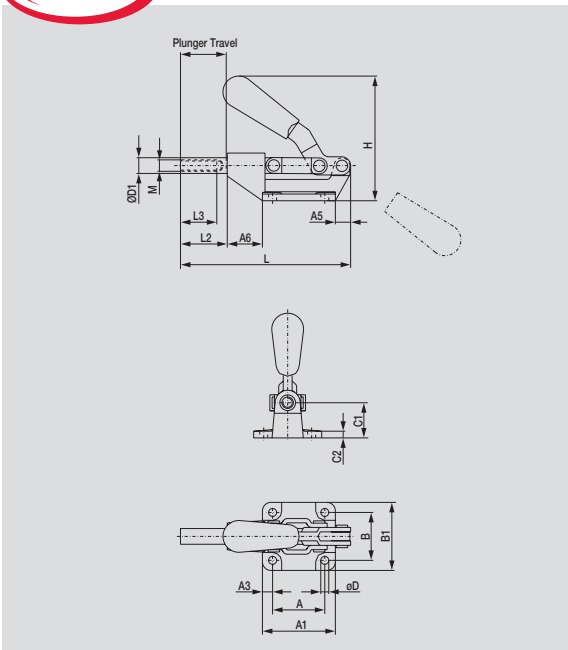

Model no.	Holding Capacity ⬅➡ [lbs.]	Plunger Travel	[lbs.]	Standard equipment	Plunger Thread (M)
603-SS	840	1.25	0.83	–	5/16-18
603-MSS	840	1.25	0.83	509907-M	M8

See additional adjustment spindles beginning on page 9.1.

Locks in both extended and retracted positions

Allow handle to fall below plane level to lock in retracted position

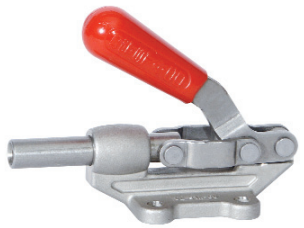

Model no.	A	A1	A3	A5	A6	B	B1	C1	C2	øD	øD1	H	L	L2	L3
603-SS	1.44	2.00	0.28	0.58	0.94	1.31	1.88	0.97	0.19	0.27	0.47	3.43	4.73	1.22	1.00
603-MSS	1.44	2.01	0.28	0.62	0.88	1.31	1.89	0.96	0.18	0.26	0.47	3.43	4.80	1.30	1.00

Available upon request

Models 602-SS, 604-SS, 604-MMSS, 624-SS

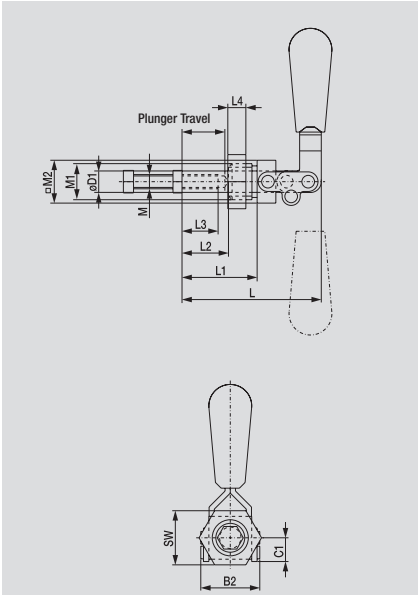

Model no.	Holding Capacity ⬅➡ [lbs.]	Plunger Travel	[lbs.]	Standard equipment	Plunger Thread (M)	Hex Jam Nut (Standard Equipment)
602-SS	200	0.75	0.25	None	1/4-20	602905
604-SS	400	1.50	0.44	None	5/16-18	606904
604-MMSS	400	1.50	0.44	509907-M	M8	606904-M
624-SS	700	2.63	1.63	None	3/8-16	624905

See additional adjustment spindles beginning on page 9.1.

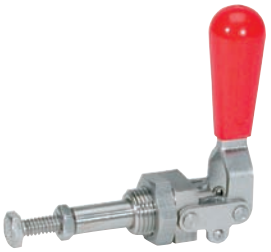

Model no.	B2	C1	øD1	H	L	L1	L2	L3	L4	M1	M2	SW
602-SS	1.03	0.88	0.37	3.13	2.62	1.31	0.97	0.63	0.25	5/8-18	0.75	0.44
604-SS	1.30	0.50	0.44	4.16	4.95	2.18	1.82	1.00	0.25	3/4-16	0.88	1.00
604-MMSS	1.30	0.50	0.44	4.16	4.95	2.18	1.82	1.00	0.25	M20x1.5	0.88	1.00
624-SS	1.81	0.75	0.62	5.60	6.68	3.62	3.24	1.25	0.25	1-14	1.25	1.50

Available upon request

Model 6015-MSS

NEW

Model no.	Holding Capacity [lbs.]	Plunger Travel	[lbs.]	Standard equipment	Plunger Thread (M)
6015-MSS	630	0.70	0.34	202916-M	M6
See additional adjustment spindles beginning on page 9.1.					

Locks in both extended and retracted positions

Allow handle to fall below plane level to lock in retracted position

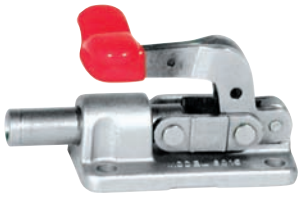

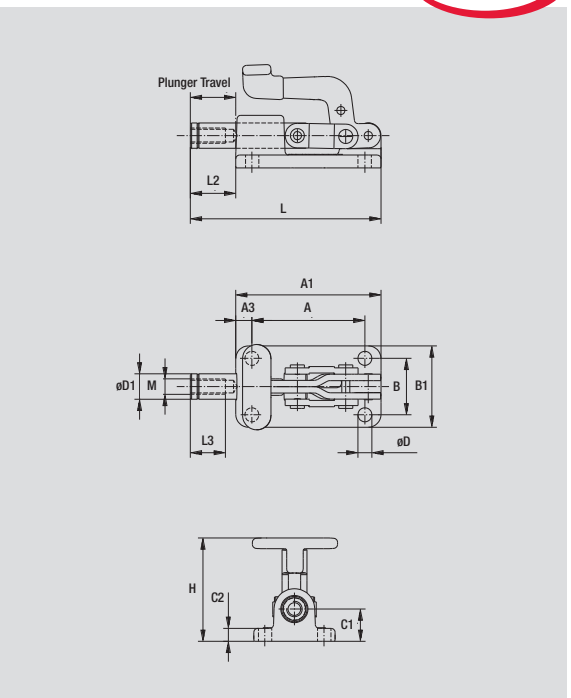

Model no.	A	A1	A3	B	B1	C1	C2	øD	øD1	H	L	L2	L3					
6015-MSS	1.75	2.25	0.25	0.88	1.25	0.50	0.20	0.22	0.38	1.60	2.95	0.70	0.75					

With latch hook
Horizontal version

Application areas

DE-STA-CO toggle clamps made of stainless steel are resistant to corrosion and chemicals. These clamps are recommended for use in the chemical and food industries.

In this series, DE-STA-CO® Toggle Lock Plus models with an additional locking release lever are also available. Secure locking can be achieved even under strong vibrating conditions.

Product features

New: with patented thumb control lever
Corrosion-resistant and heat-resistant steel
Smooth surfaces without burrs
Rivets made of stainless steel
Oil-resistant, ergonomically shaped DE-STA-CO handle grip

Models 323-SS, 331-SS, 341-SS

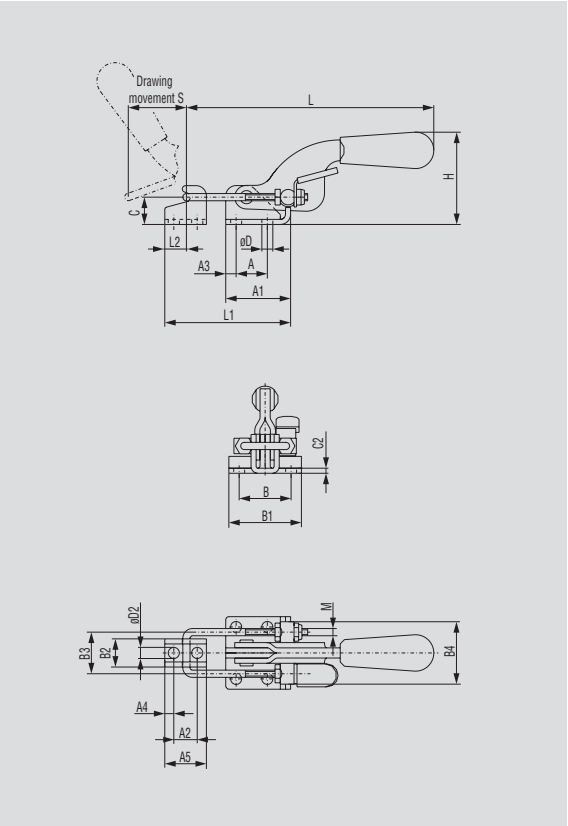

Model no.	Holding Capacity [lbs.]	[lbs.]	Adjustment Range	Drawing Movement
323-SS	360	0.15	0-0.49	1.18
331-SS	700	0.56	0-0.59	1.75
341-SS	2,000	1.43	0-0.76	3.00

ALSO AVAILABLE		
As DE-STA-CO® Toggle Lock Plus	Model 331-RSS	Page 8.15
	Model 341-RSS	Page 8.15

See accessories beginning on page 9.1.

Patented #6,561,556
For added convenience and functionality, every DE-STA-CO pull action clamp is now equipped with a thumb control lever as a standard feature.

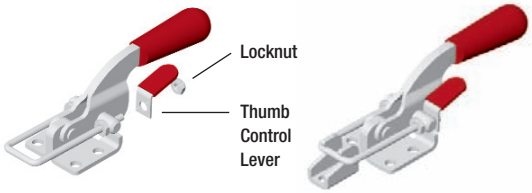

Model no.	A	A1	A2	A3	A4	A5	B	B1	B2	B3	B4	C	C2	øD	øD2	H	L	L1 max	L2	M	S
323-SS	0.63	1.02	0.39	0.20	0.24	0.79	0.75	1.10	0.52	0.75	1.06	0.47	0.08	0.17	0.17	1.19	3.91	2.25	0.35	M4	1.18
331-SS	0.75	1.56	0.56	0.26	0.22	1.00	1.25	1.74	0.68	1.00	1.50	0.66	0.12	0.27	0.27	1.97	6.06	3.05	0.50	M5	1.75
341-SS	1.63	2.38	0.75	0.38	0.38	1.50	1.50	2.12	1.19	1.75	2.32	0.94	0.16	0.33	0.33	2.89	8.20	4.59	0.75	M8	3.00

Models 331-RSS, 341-RSS

Model no.	Holding Capacity [lbs.]	[lbs.]	Adjustment Range	Drawing Movement
331-RSS	700	0.56	0-0.59	1.75
341-RSS	2,000	1.43	0-0.76	3.00

DE-STA-CO® Toggle Lock Plus

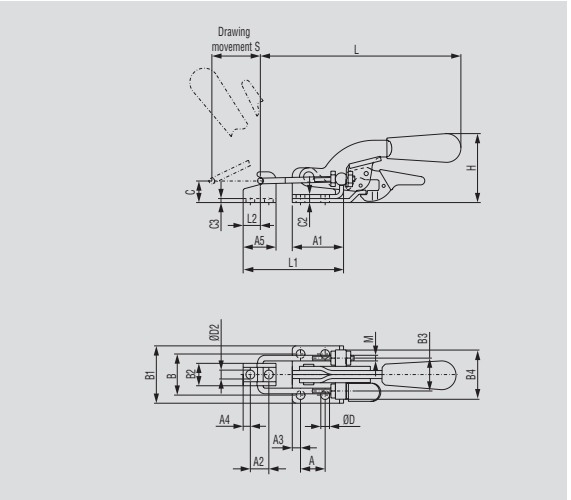

Patented #6,561,556
For added convenience and functionality, every DE-STA-CO pull action clamp is now equipped with a thumb control lever as a standard feature.

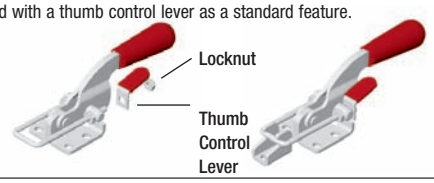

Model no.	A	A1	A2	A3	A4	A5	B	B1	B2
331-RSS	0.75	1.56	0.56	0.26	0.22	1.00	1.25	1.74	0.68
341-RSS	1.63	2.38	0.75	0.38	0.38	1.50	1.50	2.12	1.19

Model no.	B3	B4	C	C2	C3	øD	øD2	H	L	L1 max	L2	M	S
331-RSS	1.00	1.50	0.66	0.24	0.12	0.27	0.27	2.08	6.06	3.05	0.50	M5	1.75
341-RSS	1.75	2.32	0.94	0.16	0.16	0.33	0.33	2.89	8.20	4.59	0.75	M8	3.00

Model 385-V2A

NEW

Model no.	Holding Capacity [lbs.]	[lbs.]	Adjustment Range
385-V2A	6,000	3.62	0-1.07

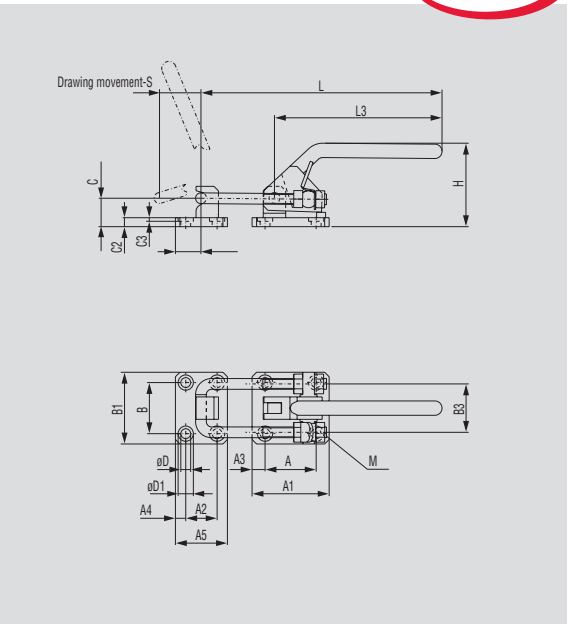

Patented #6,561,556
For added convenience and functionality, every DE-STA-CO pull action clamp is now equipped with a thumb control lever as a standard feature.

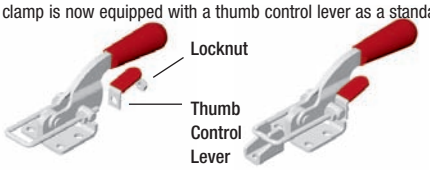

Model no.	A	A1	A2	A3	A4	A5	B	B1	B3	C	C2	C3	øD	øD1	H	L	L3	M	S
385-V2A	2.24	3.39	1.38	0.57	0.45	2.28	2.24	3.15	2.13	1.24	0.39	0.16	0.43	0.67	3.66	10.59	7.336	M12	1.81

Available upon request

Models 324-SS, 334-SS, 344-SS

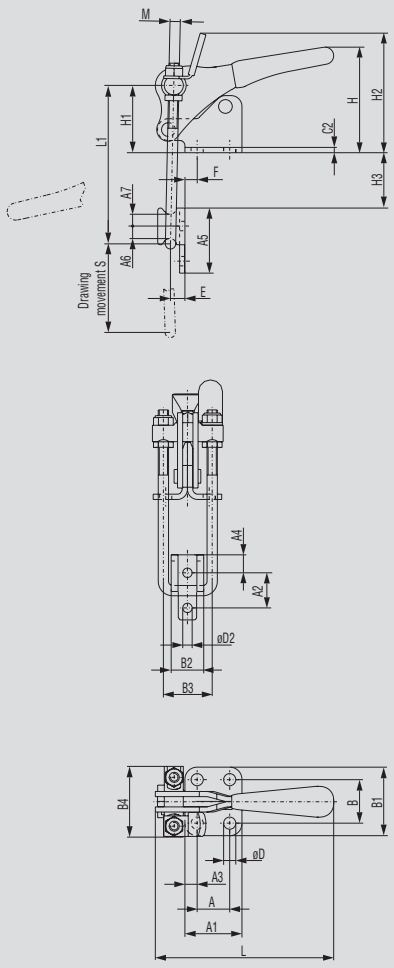

Model no.	Holding Capacity [lbs.]	[lbs.]	Adjustment Range	Drawing Movement
324-SS	500	0.25	0-0.50	1.53
334-SS	1,000	0.60	0-0.80	2.00
344-SS	2,000	1.50	0-1.26	2.50

Patented #6,561,556
For added convenience and functionality, every DE-STA-CO pull action clamp is now equipped with a thumb control lever as a standard feature.

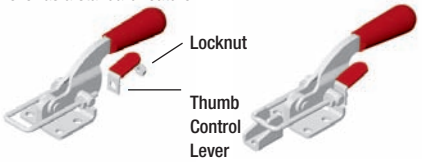

Model no.	A	A1	A2	A3	A4	A5	A6	A7	B
324-SS	0.50	1.00	0.56	0.25	0.28	1.00	0.19	0.19	0.88
334-SS	0.75	1.31	0.81	0.28	0.41	1.50	0.28	0.28	1.00
344-SS	1.25	1.94	1.06	0.35	0.69	2.13	0.36	0.39	1.44

Model no.	B1	B2	B3	B4	C2	øD	øD2	H	H2	L	L1 max	M	S	E	F	H3 max	H1	
324-SS	1.38	0.53	0.81	1.19	0.09	0.20	0.17	1.89	1.98	3.50	2.56	M4	1.53	0.19	0.22	0.91	1.10	
334-SS	1.56	0.68	1.13	1.63	0.12	0.28	0.22	2.39	2.69	4.10	3.70	M6	2.00	0.35	0.19	1.35	1.55	
344-SS	2.12	1.19	1.75	2.38	0.16	0.34	0.34	3.42	3.10	5.78	5.00	M8	2.50	0.50	0.30	1.93	1.86	

Models 330-SS, 351-SS, 371-SS, 381-SS

Model no.	Holding Capacity [lbs.]	[lbs.]	Adjustment Range	Drawing Movement
330-SS	200	0.24	0-0.25	2.31
351-SS	450	0.61	0-0.43	4.00
371-SS	750	1.53	0-0.81	5.38
381-SS	1,000	2.56	0-0.93	2.56

Patented Thumb Lever Control #6,561,556

Patented #6,561,556
For added convenience and functionality, every DE-STA-CO pull action clamp is now equipped with a thumb control lever as a standard feature.

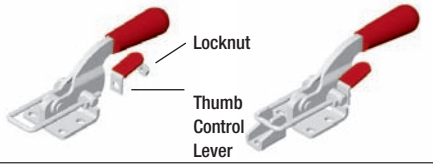

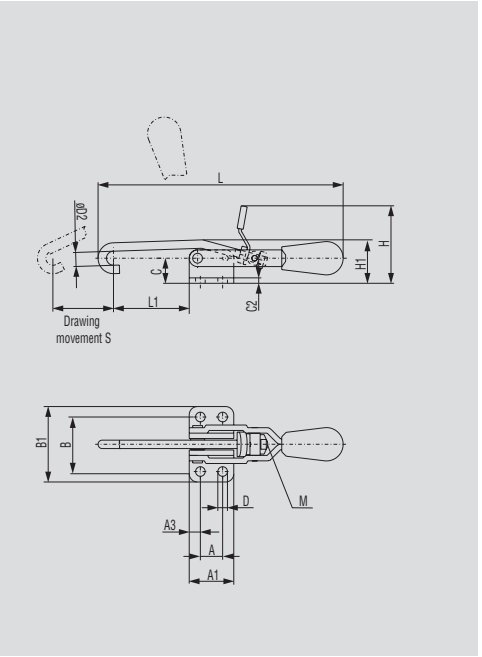

Model no.	A	A1	A3	B	B1	C	C2	øD	øD2	H	H1	L	L1 max	M	S			
330-SS	0.50	1.00	0.25	1.22	1.69	0.56	0.12	0.22	0.32	1.43	0.89	6.04	1.76	M5	2.31			
351-SS	0.75	1.50	0.50	1.37	1.93	0.75	0.12	0.22	0.38	1.85	1.35	8.86	2.18	M8	4.00			
371-SS	1.25	1.94	0.34	1.94	2.63	1.42	0.16	0.34	0.50	2.38	2.25	11.86	2.81	M10	5.38			
381-SS	1.13	2.13	0.50	2.37	3.38	1.81	0.19	0.41	0.62	2.90	2.71	13.45	3.13	M12	6.13			

Available upon request

Model 351-BSS

Model no.	Holding Capacity [lbs.]	[lbs.]	Adjustment Range	Drawing Movement
351-BSS	375	0.61	0-0.43	4.00

Patented Thumb Lever Control #6,561,556

Patented #6,561,556
For added convenience and functionality, every DE-STA-CO pull action clamp is now equipped with a thumb control lever as a standard feature.

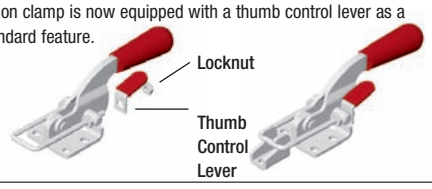

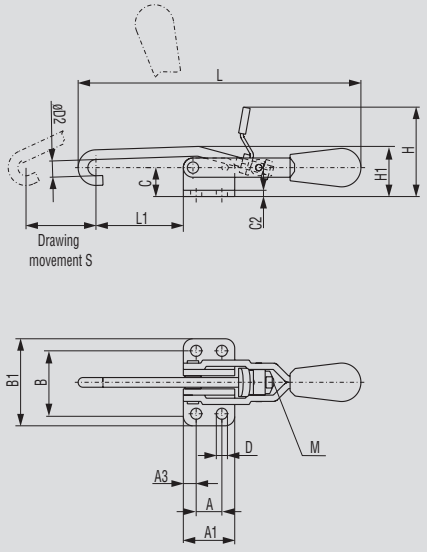

Model no.	A	A1	A3	B	B4	C	C2	øD	øD2	H	H1	L	L1 max	M	S			
351-BSS	1.50	2.00	0.25	0.95	0.56	0.86	0.12	0.27	0.38	1.96	1.46	8.86	1.67	M8	4.00			

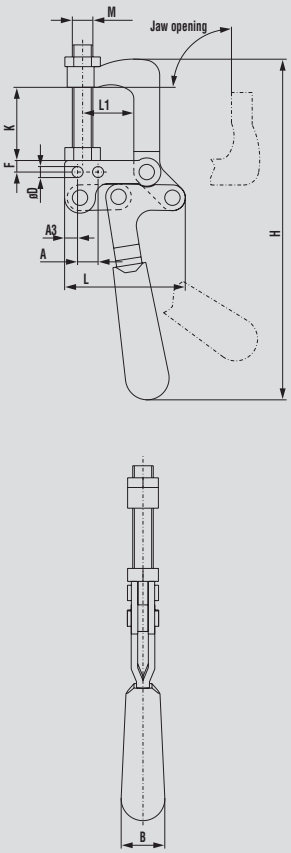

Model no.	Holding Capacity [lbs.]	Jaw Opens +10º	[lbs.]	Standard equipment
325-SS	800	90º	1.18	325943

See additional adjustment spindles beginning on page page 9.1.

Model no.	A	A3	B	øD	F	H	K	L	L1	M
325-SS	0.50	0.31	1.06	0.27	0.28	8.31	1.78	2.94	1.25	M12

Stainless Steel: latch clamps

U-shaped and hook style

Application areas

DE-STA-CO toggle clamps made of stainless steel are resistant to corrosion and chemicals. These clamps are recommended for use in the chemical and food industries.

Product features

Corrosion-resistant and heat-resistant steel
Smooth surfaces without burrs
Rivets made of stainless steel
Oil-resistant, ergonomically shaped DE-STA-CO handle grip

Model 301-SS

Model no.	Holding Capacity [lbs.]	[lbs.]	Drawing Movement
301-SS	450	0.70	4.00

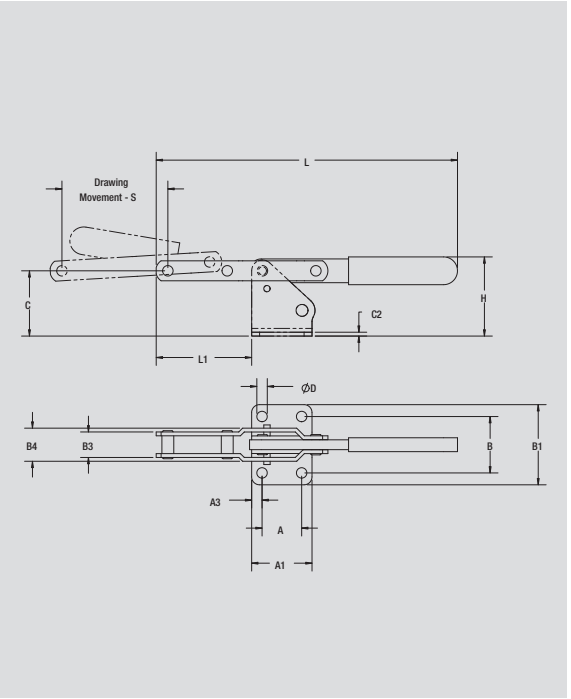

Model no.	A	A1	A3	B	B1	B3	B4	C	C2	øD	H	L	L1	S				
301-SS	0.75	1.38	0.31	1.25	1.75	0.83	1.08	1.63	0.12	0.28	1.91	8.40	2.58	4.00				

Information

DE-STA-CO clamp series 3011 is the newest addition to the rotational mold product offering. As a direct, drop-in replacement for the legacy 311 clamp, these cast, robust clamps will withstand the harsh environment of the rotational mold industry. A fixed stop automatically limits handle travel at various clamping positions after installation, removing the need to adjust a manual stop. The clamps are available in 4130 carbon steel or 316 stainless steel. The vinyl dipped ergonomic whale-tail handle provides better operator hand comfort.

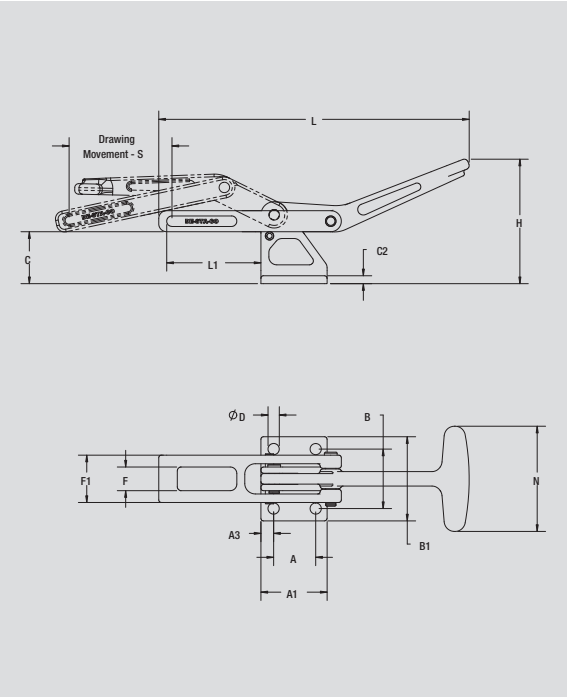

Model no.	Holding Capacity [lbs.]	[lbs.]	Drawing Movement
3011-S	2,000	2.00	3.00

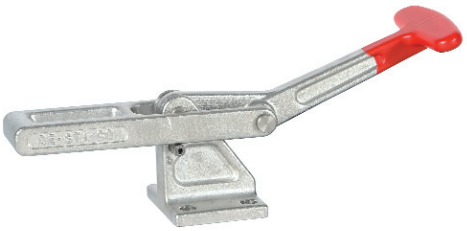

Model no.	A	A1	A3	B	B1	C	C2	øD	F	F1	H	L	L1	N	S			
3011-SS	1.25	1.97	0.38	1.78	2.52	1.87	0.24	0.33	0.71	1.42	3.72	9.23	3.04	3.15	3.00			

Models 359-35, 359-65

Information

These robust, heavy-duty cast clamps are designed to withstand the harshest environments of the rotational mold industry. They are ideal for clamping directly on the parting lines of CNC machined molds and are available in carbon or stainless steel. The clamps utilize two stainless steel pivot pins to help eliminate pivot point binding. The curved radius on the mounting flange and keeper plate allows the clamp to fit snugly along the radius of the parting line. The ergonomic handle provides greater operator comfort by reducing the stress on the operator's hands. The clamps are supplied with a tapered M10x1.5 hex head bolt assembly and keeper plate.

Model no.	Holding Capacity ➡ [lbs.]	[lbs.]	Max. Mechanical Adjustment (M.A.)
359-35	1,400	2.10	23:1
359-65	1,200	2.30	27:1

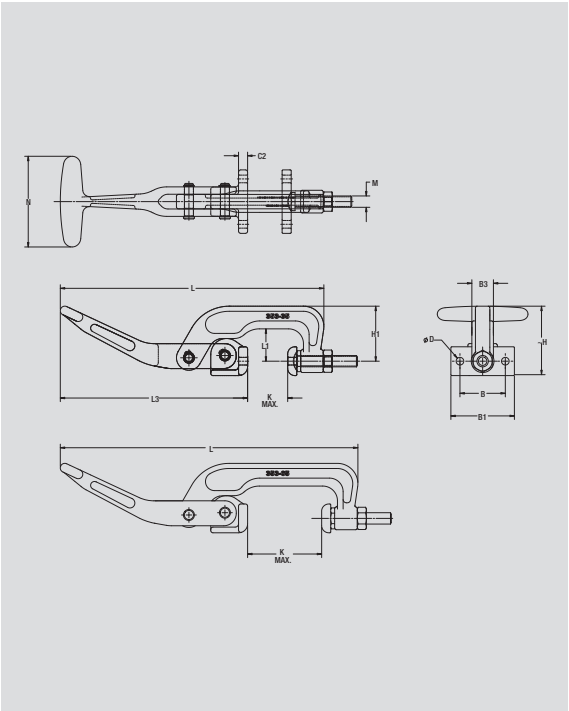

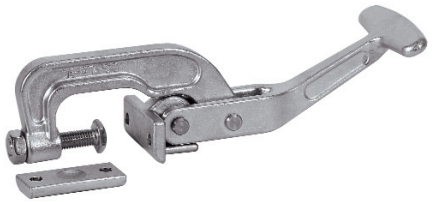

Keeper plate
(353904)

Tapered bolt assembly
(353908)

Model no.	B	B1	B3	C2	øD	~H	H1	K	L	L1	L3	M	N
359-35	1.57	2.20	0.75	0.31	0.27	2.38	1.91	1.39	9.15	1.12	6.50	M10	3.15
359-65	1.57	2.20	0.75	0.31	0.27	2.38	1.91	2.57	10.33	1.12	6.50	M10	3.15

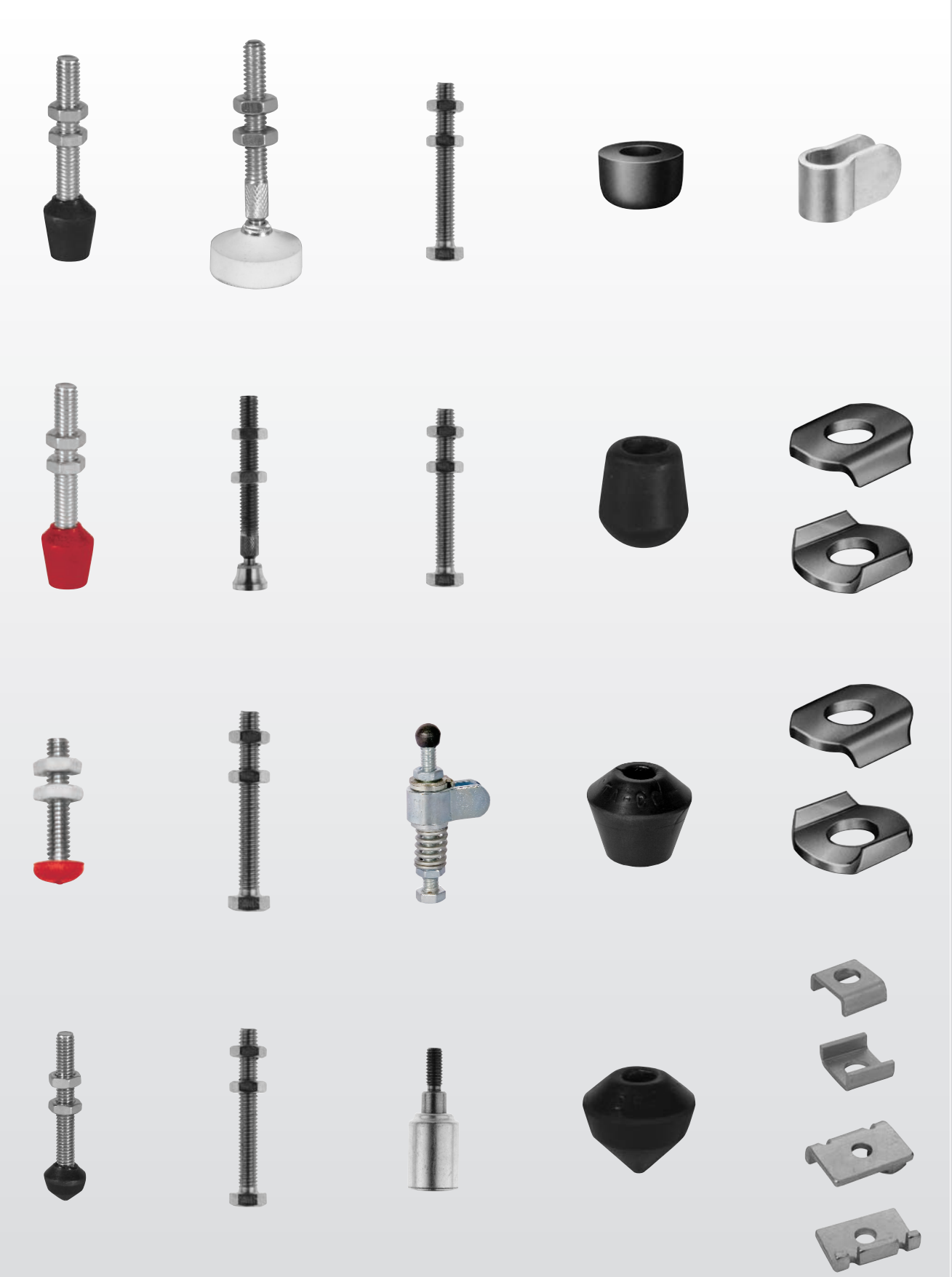

Accessories

Flat-tip Bonded Neoprene Cap*

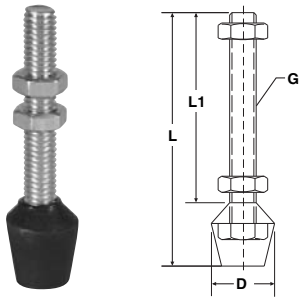

Part no.	EDP no.	L	L_1	D	Thread (G)
201208	59816	1.38	1.00	0.56	10-32
202208	59803	1.63	1.08	0.66	1/4-20
215208	59805	2.13	1.57	0.66	1/4-20
225208	59807	2.25	1.50	0.75	5/16-18
507208	59812	3.00	2.25	0.75	5/16-18
240208	59809	3.25	2.25	0.88	3/8-16
527208	59815	3.50	2.50	0.88	3/8-16
235208	59808	5.75	4.75	0.88	3/8-16
247208	59820	4.00	2.69	1.13	1/2-13
267208	59821	5.00	3.63	1.38	5/8-11
105208	59802	1.00	0.64	0.56	8-32
102208	59801	1.25	0.88	0.56	8-32
431208	59811	1.00	0.63	0.66	1/4-20
424208	59810	1.50	1.13	0.66	1/4-20

Flat-tip Bonded Neoprene Cap (METRIC)**

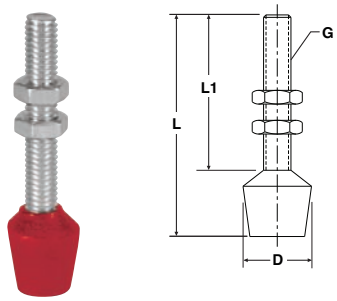

Part no.	EDP no.	L		L_1		D		Thread (G)	Wrench
202208-M	59825	44	1.73	30	1.18	16	0.63	M6 x 1.00	10 mm
215208-M	59827	54	2.13	40	1.57	16	0.63	M6 x 1.00	10 mm
225208-M	59828	53	2.09	35	1.38	21	0.83	M8 x 1.25	13 mm
235208-M	59829	120	4.72	95	3.74	26	1.02	M10 x 1.50	15 mm
240208-M	59830	79	3.11	55	2.17	26	1.02	M10 x 1.50	15 mm
247208-M	59835	97	3.82	68	2.68	30	1.18	M12 x 1.75	15 mm
507208-M	59831	83	3.27	65	2.56	21	0.83	M8 x 1.25	13 mm
NEW 424208-M*	59832	38.1	1.50	28.7	1.13	16.8	0.66	M6 x 1.00	10 mm
NEW 431208-M*	59833	25	1.00	16	0.63	22.3	0.88	M6 x 1.00	10 mm
2007208-M	59840	63	2.47	45	1.77	21	0.83	M8 x 1.25	13 mm

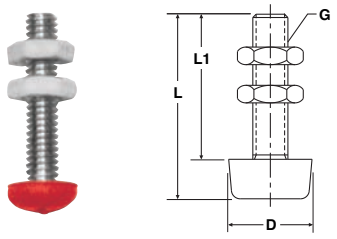

Part no.	EDP no.	L		L_1		D		Thread (G)	Wrench
NEW 201208-M	59824	32	1.26	29.2	1.15	8	0.31	M4 x 0.7	7 mm
NEW 205208-M	59836	22	0.87	19.2	0.76	8	0.31	M4 x 0.7	7 mm
NEW 213208-M	59837	34	1.34	29	1.14	10	0.39	M5 x 0.8	8 mm
NEW 305208-M	59838	29	1.14	24	0.94	10	0.39	M5 x 0.8	8 mm
NEW 307208-M	59839	43	1.69	34	1.34	19	0.75	M8 x 1.25	13 mm

Cone-tip Bonded Neoprene Cap*

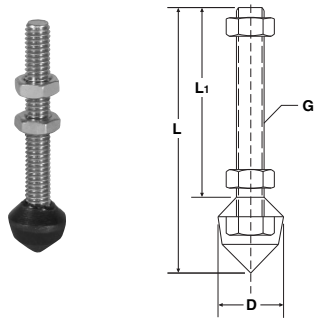

Part no.	EDP no.	L	L_1	D	Thread (G)
305208	59817	1.50	1.00	0.56	10-32
213208	59819	2.25	1.56	0.75	1/4-20
509208	59813	3.00	2.25	0.75	5/16-18
519208	59814	5.38	4.75	0.75	5/16-18
220208	59806	2.88	2.00	0.88	3/8-16
210208	59804	3.44	2.50	0.88	3/8-16

* These spindle assemblies are made from cold-drawn bar (Grade 2) and zinc plated. The spindle tip is bonded using oil resistant black neoprene with a durometer of 70-80 Shore A, to provide adequate compressibility and resiliency. The normal operating range for these assemblies is –40º F to 220º F.

** These spindle assemblies are made from cold-drawn bar (Grade 2 minimum) and zinc plated. The spindle tip is bonded using oil resistant red neoprene with a durometer of 80-85 Shore A. The normal operating range for these assemblies is –4º F to 212º F.

Note: Stainless steel bonded neoprene spindle assemblies are available upon request.

Large Diameter swivel padded spindle (white neoprene pad)

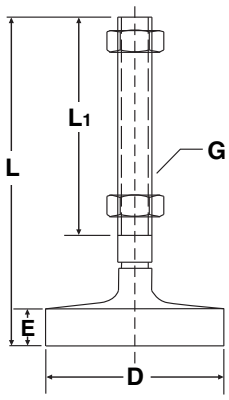

Part no.	EDP no.	L	L_1	D	E	Thread (G)	Swivel Angle
207209	59401	2.57	1.56	1.00	0.31	1/4-20	14°
507209	59402	2.98	1.94	1.50	0.31	5/16-18	14°
210209	59403	3.63	2.44	2.00	0.31	3/8-16	14°

Padded swivel foot is bonded using oil resistant white neoprene with a durometer of 70-80, to provide adequate compressibility and resiliency. Normal operating is - 40°F to 220°F.

Swivel Foot

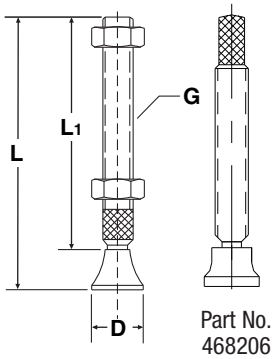

Part No. 468206

Part no.	EDP no.	L	L_1	D	Thread (G)	Swivel Angle
207206	59601	2.38	1.99	0.50	1/4-20	10°
507206	59605	2.75	1.94	0.56	5/16-18	14°
468206*	59604	3.06	1.92	0.63	3/8-16	13°
468206-AL*	59606	3.00	2.00	0.63	3/8-16	13°
210206	59602	3.38	2.44	0.63	3/8-16	13°
250206	59603	4.63	3.44	1.00	1/2-13	13°
NEW 468206-M	59607	3.00	2.00	0.63	M10	13°

* Knurl on end of thread

Available upon request, as are a number of other modications

Hex-Head – fully threaded stainless steel

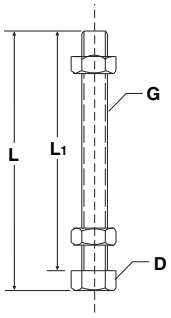

Part no.	EDP no.	L	L_1	D	Thread (G)
205943	59321	0.86	0.75	1/4	8-32
213943	59322	1.13	1.03	1/4	8-32
201943	59323	1.13	1.03	5/16	10-32
202943	59324	1.50	1.38	7/16	1/4-20
207943	59326	2.50	2.31	1/2	5/16-18
237943	59327	2.77	2.25	9/16	3/8-16
245943	59328	3.00	2.75	3/4	1/2-13
207943-M	59860	2.77	2.56	13mm	M8 x 1.25
237943-M	59861	3.00	2.76	17mm	M10 x 1.50

Accessories

Hex-Head – fully threaded Aluminum

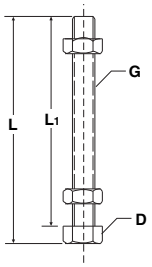

Part no.	EDP no.	L	L_1	D	Thread (G)
441203-AL	59341	1.75	1.50	1/2	5/16-18
491203-AL	59342	1.50	1.25	9/16	3/8-16
485203-AL	59344	2.75	2.50	9/16	3/8-16
486203-AL	59345	4.00	3.75	9/16	3/8-16

Available upon request, as are a number of other modications

Hex-Head – fully threaded carbon steel

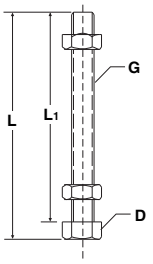

Part no.	EDP no.	L	L_1	D	Thread (G)
105203	59301	0.86	0.75	1/4	8/32 Nylon
305203	59313	1.09	1.00	5/16	10-32
202203	59303	3.13	3.00	7/16	1/4-20
205203	59302	1.88	1.69	7/16	1/4-20
461203	59314	1.00	0.84	1/2	5/16-18
441203	59312	1.94	1.75	1/2	5/16-18
207203	59304	2.75	2.50	1/2	5/16-18
491203	59315	1.50	1.25	9/16	3/8-16
210203	59305	3.00	2.75	9/16	3/8-16
240203	59307	4.25	4.00	9/16	3/8-16
527203	59316	5.25	5.00	9/16	3/8-16
325203	59317	2.84	2.50	3/4	1/2-13
220203	59306	3.31	3.00	3/4	1/2-13
250203	59308	4.38	4.00	15/16	5/8-11

Hex-Head – fully threaded carbon steel (METRIC)

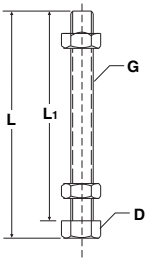

Part no.	EDP no.	L	L_1	D	Thread (G)
210203-M	59309	3.03	2.76	16 mm	M10
240203-M	59310	4.25	4.00	16 mm	M10
441203-M	59311	19.4	1.75	13 mm	M8
461203-M	59318	1.00	0.81	13 mm	M8
491203-M	59319	1.50	1.25	16 mm	M10
205203-M	59329	1.93	1.77	10 mm	M6
207203-M	59330	2.97	2.76	13 mm	M8
267203-M	59859	5.12	4.72	24mm	M16 x 2.0

Plunger-matic Assemblies

Part No.
905

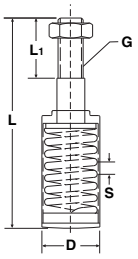

Part no.	EDP no.	L	L_1	D	S	Thread (G)	Max. Comp	Max. Pres.
905	59050	2.50	0.75	0.88	0.19	5/16-18	0.19"	135 lbs.
920	59200	3.63	1.13	0.88	0.38	3/8-16	0.38"	308 lbs.

For use with plunger/straight-line action clamps. The compression spring allows the clamp to compensate for variations in material thickness. Clamp capacity is only as great as the maximum spring pressure.

Neoprene Caps

Slip on the heads of hex-head spindles.
Durometer: 60-70.
Normal operating range: -40º F to 220º F.

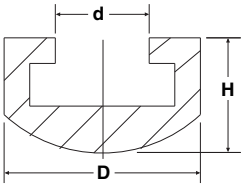

Part no.	EDP no.	D	d	H	For Spindle Diamater
215119	59102	0.63	0.25	0.44	1/4
225119	59103	0.75	0.31	0.50	5/16
235119	59105	0.88	0.38	0.53	3/8

Special Neoprene Caps

Slip on threaded spindle rod.

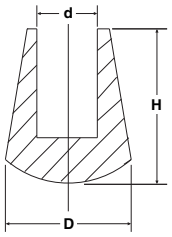

Part no.	EDP no.	D	d	H	For Spindle Diamater
424107	59106	0.44	0.22	0.44	7/32
235110	59104	0.72	0.34	0.88	11/32

Polyurethane Caps

Flat-tip, internally threaded to screw onto spindle end. Durometer: 80.
Normal operating range: -90º F to 200º F.

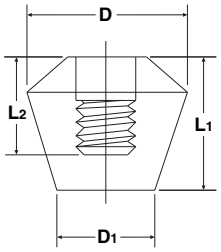

Part no.	EDP no.	D	D_1	L_1	L_2	For Spindle Diamater
215219	59110	0.81	0.50	0.69	0.50	1/4
225219	59111	0.81	0.50	0.69	0.50	5/16
235219	59112	0.81	0.63	0.88	0.63	3/8

Polyurethane Caps

Cone-tip, internally threaded to screw onto spindle end.

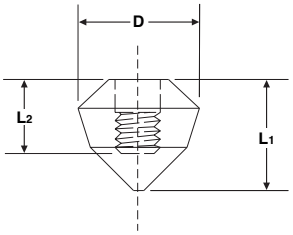

Part no.	EDP no.	D	L_1	L_2	Point Angle	For Spindle Diamater
215319	59113	0.81	0.75	0.50	90°	1/4
225319	59114	0.81	0.75	0.50	90°	5/16
235319	59115	0.81	0.94	0.63	90°	3/8

Accessories

Bolt Retainers –

For clamps with "S" solid hold-down bars.

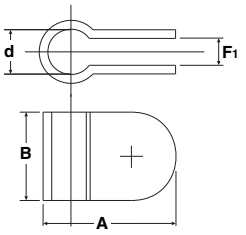

Part no.	EDP no.	A	B	F_1	d	For Spindle
207105	59850	1.25	0.63	0.25	0.33	5/16, M8
210114	59851	1.50	0.75	0.31	0.53	3/8, M10
247110	59852	1.63	0.88	0.38	0.56	1/2, M12
110122	59853	1.88	1.25	0.38	0.64	5/8, M16
250121	59854	1.88	1.00	0.38	0.64	1/2, M12
2002115-E	59856	0.97	0.50	0.23	0.26	1/4, M6
2007115-E	59857	1.26	0.75	0.23	0.34	5/16, M8
2010115-E	59858	1.58	1.13	0.32	0.41	3/8, M10

Flanged Washers –

For "U" bar clamps – Carbon Steel.

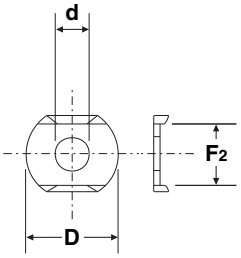

Part no.	EDP no.	D	d	F_2	For Spindle
105106	59122	0.44	0.17	0.33	No. 8, M4
102111	59121	0.56	0.20	0.38	No. 10, M5
215105	59123	0.69	0.27	0.50	1/4, M6
507107	59125	0.88	0.33	0.60	5/16, M8
235106	59124	1.00	0.41	0.75	3/8, M10
247109	59126	1.25	0.53	0.91	1/2, M12
267102	59127	1.44	0.66	1.03	5/8, M16

Flanged Washers –

For "U" bar clamps – Stainless Steel.

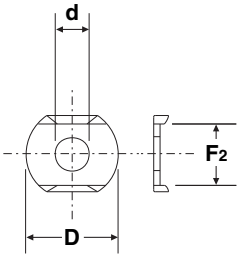

Part no.	EDP no.	D	d	F_2	For Spindle
105906	59131	0.44	0.17	0.33	No. 8, M4
102911	59132	0.56	0.20	0.38	No. 10, M5
215905	59133	0.69	0.27	0.50	1/4, M6
507907	59134	0.88	0.33	0.60	5/16, M8
235906	59135	1.00	0.41	0.75	3/8, M10
247909	59136	1.25	0.53	0.91	1/2, M12

A single Carver Model T500-1 moving head, and two T500-2, fixed head Edge Grip clamps hold a part for milling.

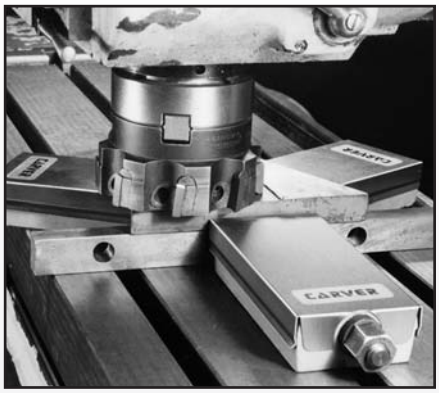

Carver Model T285-18 “C” style clamp used in a drilling operation.

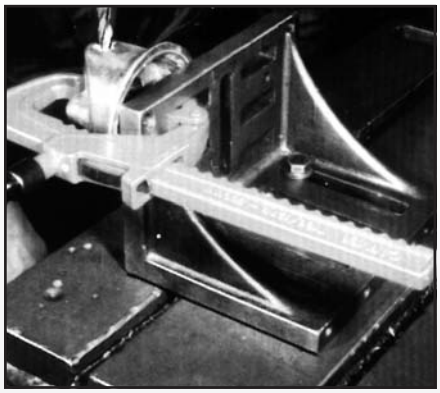

Two low-profile T500 Carver Edge Grip clamps apply both horizontal and vertical clamping force to secure parts for a milling operation. This double action is beyond the capabilities of machine vises.

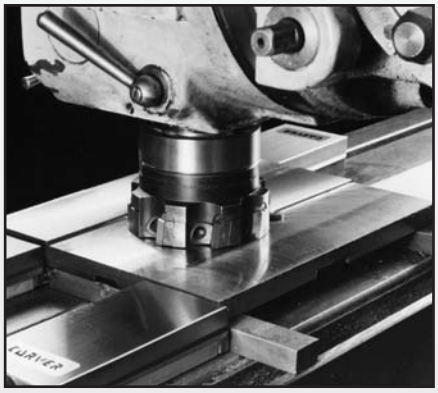

Two Carver Model T614-0 clamps secure a part fixture during a drilling application.

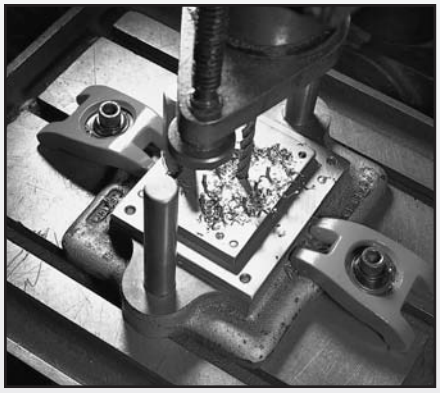

A circular part is held for a slot milling operation using Carver Model T550-2 heavy-duty Edge Grip clamps. The T550-2 clamps swivel a full 360° for infinite angular alignment.

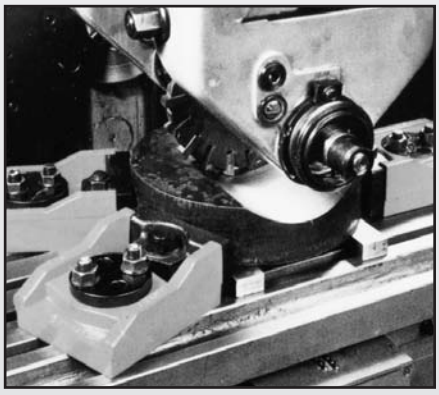

Two versatile Carver Bar Style clamps used in a welding application. The clamps are supplied with two reversible jaws for either clamping or spreading.

Carver heavy-duty Edge Grip Models T550-1 and T550-2 used in a milling application.

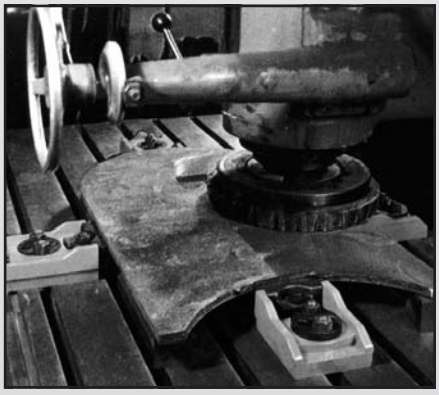

Two Carver Model T614-1 Buttress Style clamps provide exceptional stability to the workpiece in this milling process.

Product range

Bar-Style

	Model no.	Holding Capacity max. [lbs.]	Page
	T186-24 T186-36 T186-60 T186-84 T186-96	2,500 2,500 2,500 2,500 2,500	10.4
	T321-24 T321-36 T321-60 T321-84 T321-96	1,500 1,500 1,500 1,500 1,500	
	T290-36 T290-60 T290-84 T290-48	4,000 4,000 4,000 4,000	
	T285-36 T285-60 T285-84 T285-48	2,000 2,000 2,000 2,000	
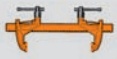	T257-84 T257-108	6,000 6,000	

C-Style

	Model no.	Holding Capacity max. [lbs.]	Page
	T186-6 T186-12 T186-20 T186-30	2,500	10.6
	T321-10	1,250	
	T290-9 T290-18 T290-40	4,000	
	T285-9 T285-18 T285-40	2,000	
	T257-6 T257-12 T257-18 T257-24 T257-36 T257-54	6,000	

Typical Applications

Bar Clamps

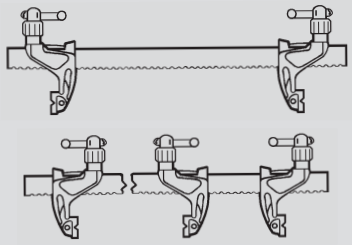

"C" Clamps

No obstruction from long screw.
Ideal for structural steel fabrication.

Unaffected by weld spatter.
Screw is shielded and out of work area.

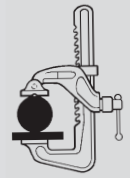

Holds rounds to flats.
Limited movement of moveable jaw pad and grooved face ensure positive grip on round objects.

Buttress Style

	Model no.	Holding Capacity max. [lbs.]	Page
	T614-0	2,875	10.8
	T614-1	13,750	
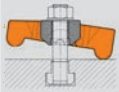	T614-2	17,600	

Edge Grip Style

	Model no.	Holding Capacity max. [lbs.]	Page
	T500	1,980 Horizontal 1,980 Vertical	10.10
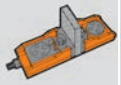	T550	9,900 Horizontal 3,960 Vertical	

T-Slot Style

	Model no.	Holding Capacity max. [lbs.]	Page
	T400-4 T400-6 T400-8	5,000	10.12
	T600-4 T600-6 T600-8	3,500	
	T402-6 T402-12 T402-18 T402-24	8,000	
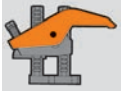	T602-6 T602-12 T602-18 T602-24 T602-30	5,500	

Typical Applications

Buttress Clamps

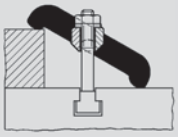

T-Slot Clamps

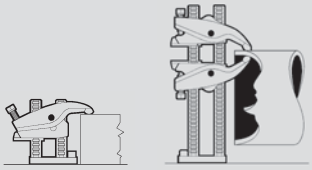

Ideal for use as manual die clamps. Eliminates the need for step blocks or riser blocks.

Edge Grip Clamps

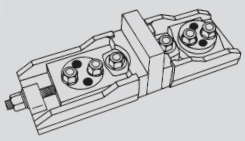

Bar-Style

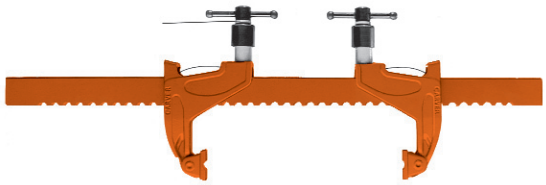

These rugged clamps, made from high-tensile, heat-treated steel, are designed for all types of applications requiring large holding capacities from 1,250 to 6,000 lbs. The clamps are highly versatile. For example, jaws can be reversed to provide spreading action, or several jaws can be used on a single bar both for fixturing and positive component location and clamping.

Available models include T321 Standard-Duty Deep Throat, T285 Medium-Duty Deep Throat, T186 Standard-Duty, T290 Medium-Duty and T257 Heavy-Duty. In addition, standard and medium-duty connectors are available to couple like bars together for increased clamping reaches.

Fits 2 bars

Model no.	For Bar Clamps Model no.	Weight [lbs.]
T186-13	T186-.. and T321-..	1.54
T290-13	T285-.. and T290-..	2.87

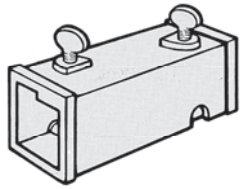

Connector

Holding Capacity [lbs.]	Throat Depth B_1	Width Opening S min	Width Opening S max	Width Opening S_1 min	Width Opening S_1 max	Model no.	Clamping Screw Ø	Weight [lbs.]	Consisting of: 1 x	Consisting of: 2 x
 2,500 lbs.	2.38	8.50	24	2.95	26.77	T186-24	M12	7.50	186-24-1	186-2
		8.50	36	2.95	38.98	T186-36		9.50	186-36-1	186-2
		8.50	60	2.95	–	T186-60		13.50	186-60-1	186-2
		8.50	84	2.95	–	T186-84		17.50	186-84-1	186-2
		8.50	96	2.95	–			19.50	186-96-1	186-2
 1,250 lbs.	4.7	5.50	24	3.15	27.17	T321-24	M12	7.00	186-24-1	321-2
		5.50	36	3.15	39.37	T321-36		9.00	186-36-1	321-2
		5.50	60	3.15	62.99	T321-60		13.00	186-60-1	321-2
		5.50	84	3.15	–	T321-84		17.00	186-84-1	321-2
		5.50	96	3.15	–			19.00	186-96-1	321-2
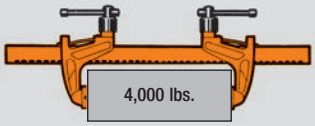 4,000 lbs.	3.5	10.00	36	4.72	39.57	T290-36	M16	20.50	290-36-1	290-2
		10.00	48	4.72	–	T290-48		24.50	290-48-1	290-2
		10.00	60	4.72	63.78	T290-60		28.50	290-60-1	290-2
		10.00	84	4.72	87.40	T290-84		36.50	290-84-1	290-2
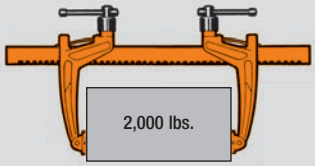 2,000 lbs.	8.0	6.00	36	4.72	42.72	T285-36	M16	24.50	290-36-1	285-2
		6.00	48	4.72	–	T285-48		28.50	290-48-1	285-2
		6.00	60	4.72	66.93	T285-60		32.50	290-60-1	285-2
		6.00	84	4.72	90.55	T285-84		40.50	290-84-1	285-2
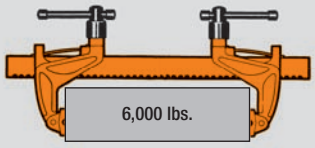 6,000 lbs.	4.5	12.00	84	5.90	86.61	T257-84	M20	61.00	257-84-1	257-2
		12.00	108	5.90	–	T257-108		71.00	257-108-1	257-2

Available upon request

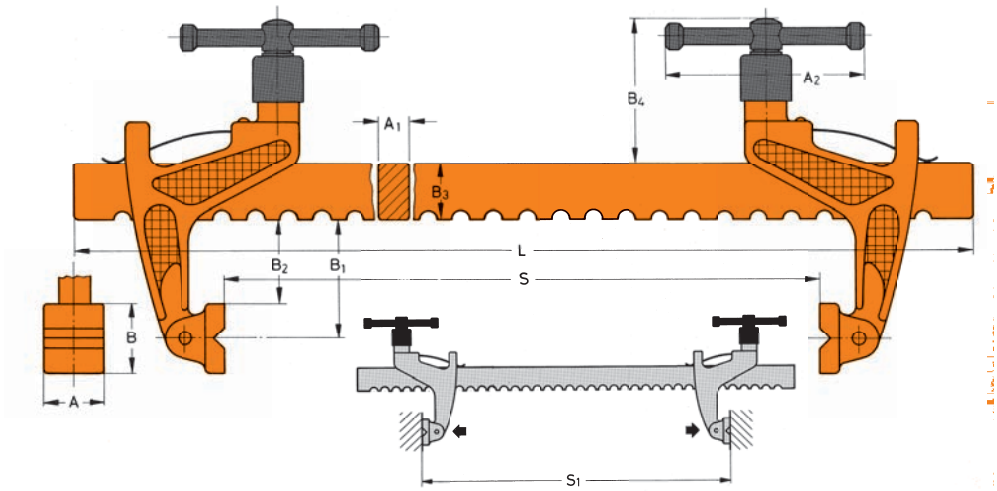

Model no.	A	A_1	A_2	B	B_2	B_3	B_4	L
T186-24	0.98	0.47	2.99	1.26	1.73	1.18	2.99	27.75
T186-36	0.98	0.47	2.99	1.26	1.73	1.18	2.99	39.75
T186-60	0.98	0.47	2.99	1.26	1.73	1.18	2.99	63.95
T186-84	0.98	0.47	2.99	1.26	1.73	1.18	2.99	87.75
T186-96	0.98	0.47	2.99	1.26	1.73	1.18	2.99	99.75
T321-24	0.98	0.47	2.99	1.26	4.09	1.18	2.99	27.75
T321-36	0.98	0.47	2.99	1.26	4.09	1.18	2.99	39.75
T321-60	0.98	0.47	2.99	1.26	4.09	1.18	2.99	63.95
T321-84	0.98	0.47	2.99	1.26	4.09	1.18	2.99	87.75
T321-96	0.98	0.47	2.99	1.26	4.09	1.18	2.99	99.75
T290-36	1.50	0.79	5.51	2.00	2.56	1.57	4.13	39.75
T290-48	1.50	0.79	5.51	2.00	2.56	1.57	4.13	51.50
T290-60	1.50	0.79	5.51	2.00	2.56	1.57	4.13	63.38
T290-84	1.50	0.79	5.51	2.00	2.56	1.57	4.13	87.50
T285-36	1.50	0.79	5.51	2.00	7.09	1.57	4.13	39.75
T285-48	1.50	0.79	5.51	2.00	7.09	1.57	4.13	51.50
T285-60	1.50	0.79	5.51	2.00	7.09	1.57	4.13	63.38
T285-84	1.50	0.79	5.51	2.00	7.09	1.57	4.13	87.50
T257-84	2.00	0.87	7.36	2.50	3.27	2.05	5.00	90.38
T257-108	2.00	0.87	7.36	2.50	3.27	2.05	5.00	114.38

Available upon request

C-Style

Operation

Operation is very simple. The operator slides the spring loaded moveable jaw toward the workpiece to the nearest notch where it locks into the detent. Hand tightening the screw advances the clamp jaw. The jaw advances the tilting pad directly into contact with the workpiece – there is no rotating to twist the work or the clamp out of position.

An unusual and very useful feature of these clamps is the ability to use the clamp for spreading or locating as well as squeezing.

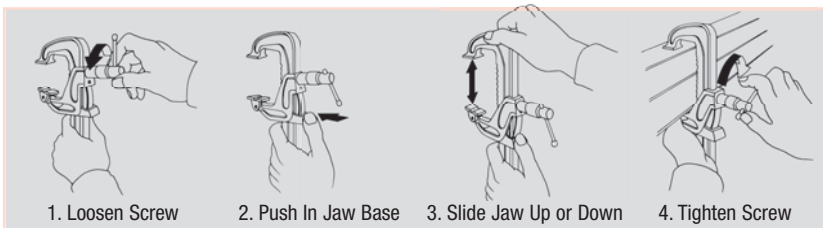

1. Loosen Screw 2. Push In Jaw Base 3. Slide Jaw Up or Down 4. Tighten Screw

Holding Capacity [lbs.]	Throat Depth B_1	Width Opening S	Model no.	Clamping Screw Ø	Weight [lbs.]	Consisting of: 1 x	Consisting of: 2 x
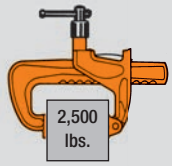 2,500 lbs.	2.38	0-6	T186-6	M12	2.75	186-6-1	186-2
		0-12	T186-12		3.75	186-12-1	186-2
		0-20	T186-20		5.51	186-20-1	186-2
		0-30	T186-30		7.05	186-30-1	186-2
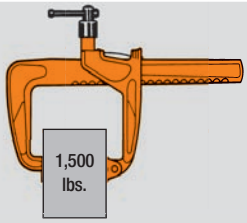 1,500 lbs.	4.75	0-10	T321-10	M12	4.00	321-10-1	321-2
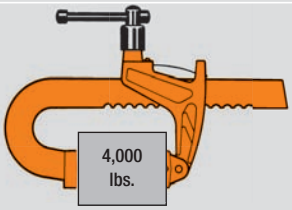 4,000 lbs.	3.50	0-9	T290-9	M16	10.00	290-9-1	290-2
		0-18	T290-18		13.50	290-18-1	290-2
		0-40	T290-40		23.15	290-40-1	290-2
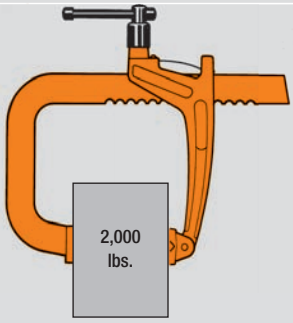 2,000 lbs.	8.00	0-9	T285-9	M16	12.00	285-9-1	285-2
		0-18	T285-18		13.50	285-18-1	285-2
		0-40	T285-40		25.35	285-40-1	285-2
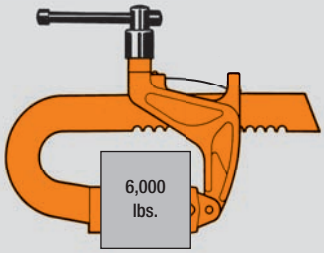 6,000 lbs.	4.50	0-6	T257-6	M20	20.00	257-6-1	257-2
		0-12	T257-12		22.50	257-12-1	257-2
		0-18	T257-18		25.00	257-18-1	257-2
		0-24	T257-24		27.50	257-24-1	257-2
		0-36	T257-36		32.50	257-36-1	257-2
		0-54	T257-54		41.00	257-54-1	257-2

Available upon request

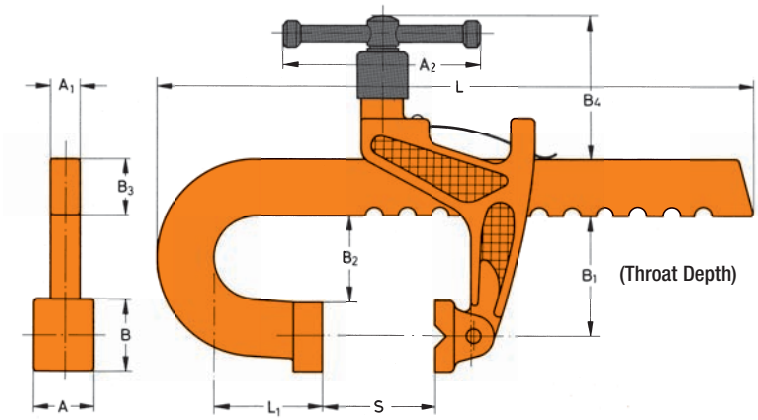

Model no.	A	A_1	A_2	B	B_2	B_3	B_4	L	L1
T186-6	0.98	0.51	3.00	1.25	1.69	1.30	3.00	9.63	0.88
T186-12	0.98	0.51	3.00	1.25	1.69	1.30	3.00	15.50	0.88
T186-20	0.98	0.47	3.00	1.38	1.69	1.18	3.00	27.36	3.15
T186-30	0.98	0.47	3.00	1.38	1.69	1.18	3.00	34.45	1.18
T321-10	0.98	0.51	3.00	1.25	4.02	1.32	3.00	14.25	1.00
T290-9	1.57	0.79	5.51	2.36	2.56	1.57	4.13	16.50	2.75
T290-18	1.57	0.79	5.51	2.36	2.56	1.57	4.13	25.50	2.75
T290-40	1.57	0.79	5.51	2.36	2.56	1.57	4.13	47.44	2.75
T285-9	1.57	0.79	5.51	2.36	7.09	1.57	4.13	16.50	2.75
T285-18	1.57	0.79	5.51	2.36	7.09	1.57	4.13	25.50	2.75
T285-40	1.57	0.79	5.51	2.36	7.09	1.57	4.13	47.44	2.75
T257-6	2.00	0.87	7.36	2.36	3.35	2.00	5.00	13.38	3.75
T257-12	2.00	0.87	7.36	2.36	3.35	2.00	5.00	21.50	3.75
T257-18	2.00	0.87	7.36	2.36	3.35	2.00	5.00	27.38	3.75
T257-24	2.00	0.87	7.36	2.36	3.35	2.00	5.00	33.50	3.75
T257-36	2.00	0.87	7.36	2.36	3.35	2.00	5.00	45.50	3.75
T257-54	2.00	0.87	7.36	2.36	3.35	2.00	5.00	63.50	3.75

Available upon request

Buttress Style

These workholding clamps are designed for use on thin or low-profile workpieces replacing ordinary strap clamps. They feature a self-aligning swiveling pivot which allows the tightening bolt to always remain vertical, preventing any side forces.

The two-point contact offered by Models T614-0 and T614-1 also provides greater stability to the workpiece. Ideally suited for manual die clamping. Eliminates the need for step blocks or riser blocks.

Holding Capacity [lbs.]	Working Height Range	For screw diameter	Model no.	Weight [lbs.]
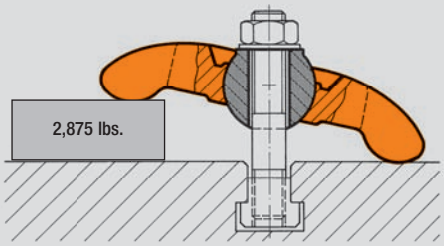	0-1.75"	1/2"	**T614-0**	1.5
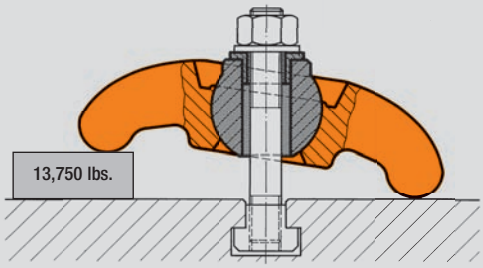	0-2.25"	5/8" and 3/4"	**T614-1**	5.8
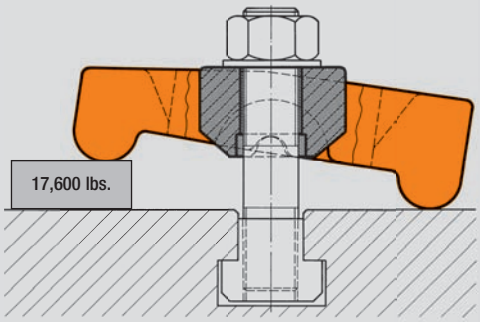	0-3.00"	1"	**T614-2**	9.5

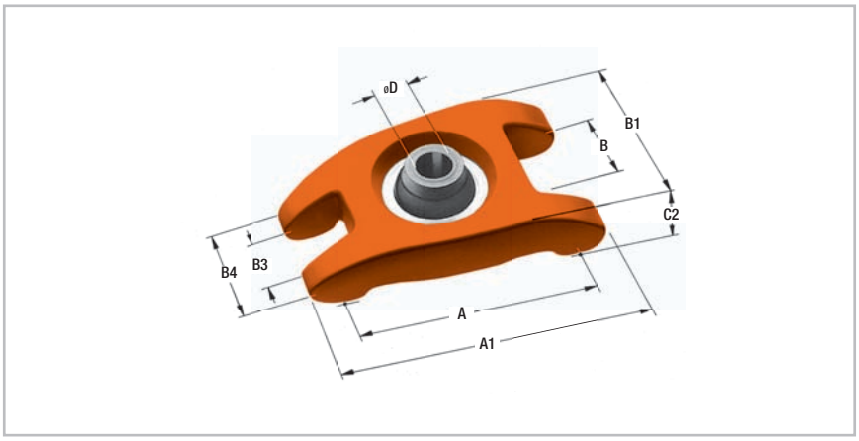

Holding capacity 2,875 lbs.
Clamping height 1.75" max.
Model no. **T614-0**

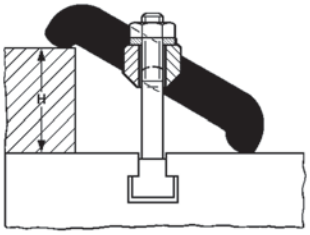

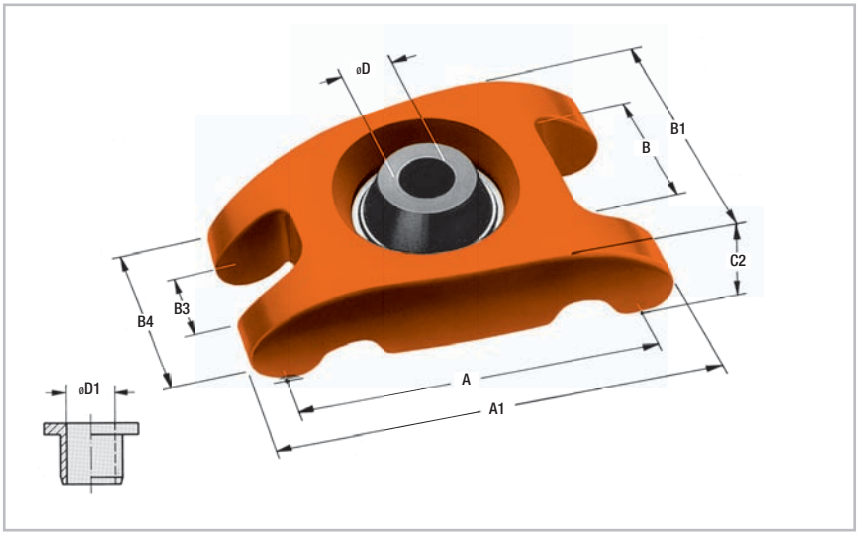

Holding capacity **13,750 lbs.**
Clamping height 2.25" max.
Model no. **T614-1**

Delivery includes reducing bush with inner diameter 0.67".

Reducer bushing is standard equipment

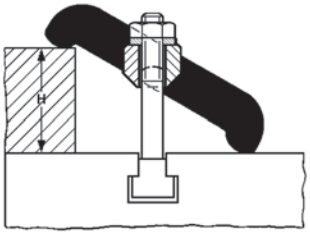

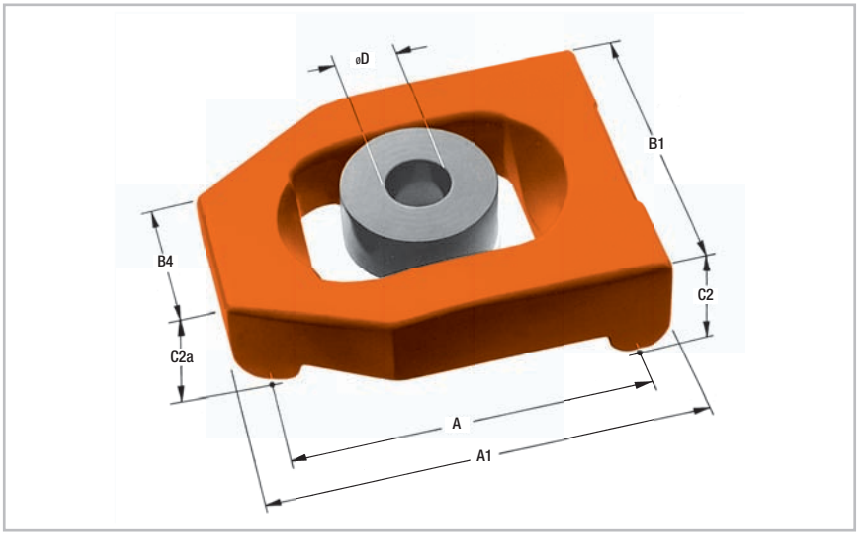

Holding capacity **17,600 lbs.**
Clamping height 3.00" max.
Model no. **T614-2**

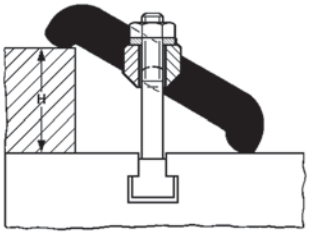

Model no.	A	A1	B	B1	B3	B4	C2	C2a	øD	øD1
T614-0	3.54	4.34	1.41	2.56	0.78	1.56	0.78	–	0.51	–
T614-1	5.28	6.31	2.38	3.94	1.13	2.69	1.81	–	0.83	0.67
T614-2	5.83	6.69	–	5.13	–	2.56	1.97	1.57	1.02	–

Edge Grip Style

These low-profile clamps apply both horizontal and vertical clamping force against the workpiece to pull it down onto the work table as well as clamp it in position. They are designed to be used with T-Slot tables (or bolted to a plate) and allow maximum cutter access to the workpiece's surface. Edge Grip clamps are excellent for milling, planing, grinding and general surfacing operations which are beyond the capabilities of machine vises.

Because the Edge Grip clamp set consists of two separate pieces – both locked to the T-Slot table – any length part (within the dimensions of the table) can be clamped.

The heavy-duty model also gives the additional advantage of swiveling through a full 360° for infinite angular alignment and gives a choice of two mounting hole sizes.

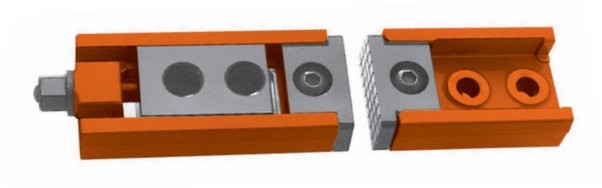

Model no. **T500**

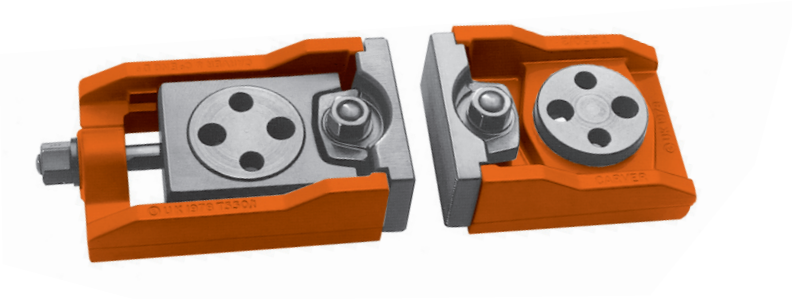

Model no. **T550**

Clamping force		The total set consists	For screw diameter	Model no.	Weight [lbs.]
Horizontal	Vertical				
1,980 lbs.	1,980 lbs. 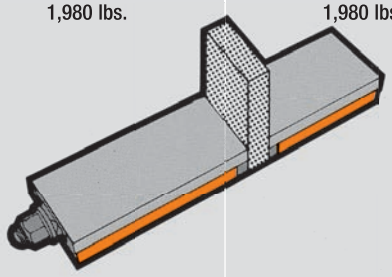	1 moving head with swarf cover **(T500-1) (T500-2)** 1 fixed head with swarf cover 4 T-slot nuts 14 (M12) 4 button head socket screws (M12 x 35) 2 hex keys	1/2"	**T500**	8.38
9,900 lbs.	3,960 lbs. 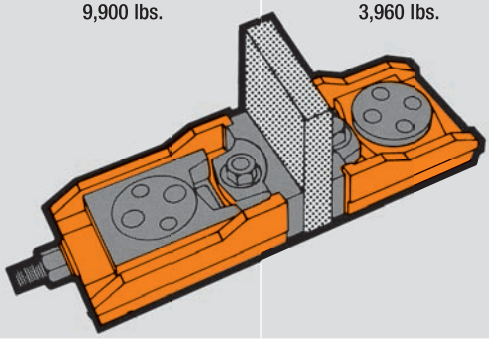	1 Moving head **(T550-1)** 1 Fixed head **(T550-1)**	5/8" and 3/4"	**T550**	52.91

Available upon request

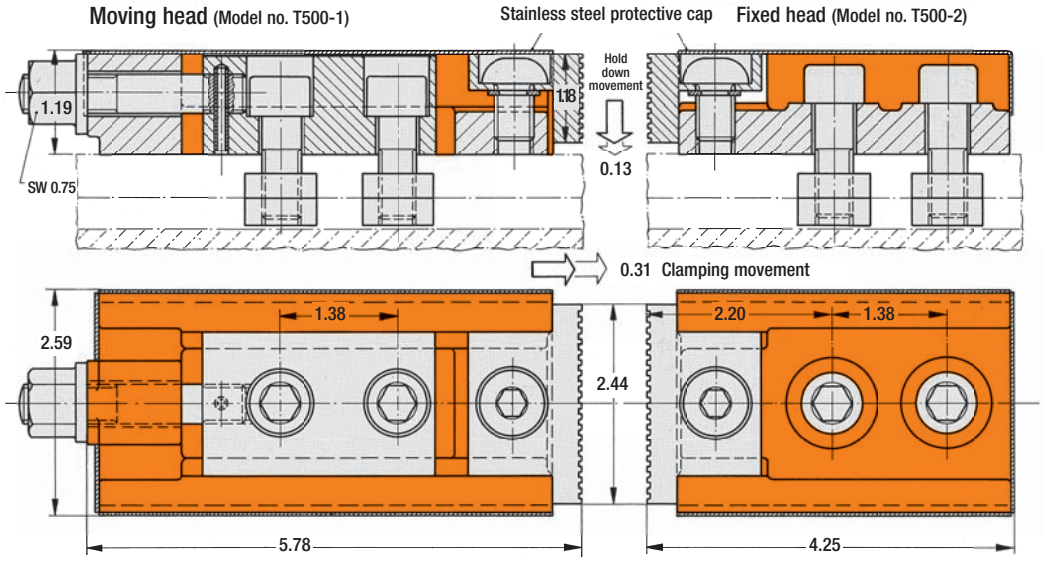

Operating instruction

1. Place clamps against workpiece and tighten cap screws on fixed head
2. Tighten anchor cap screws on moving head
3. Apply pressure with rear-nut slightly
4. Tighten down jaw screws on fixed and moving heads
5. Apply pressure with rear-nut

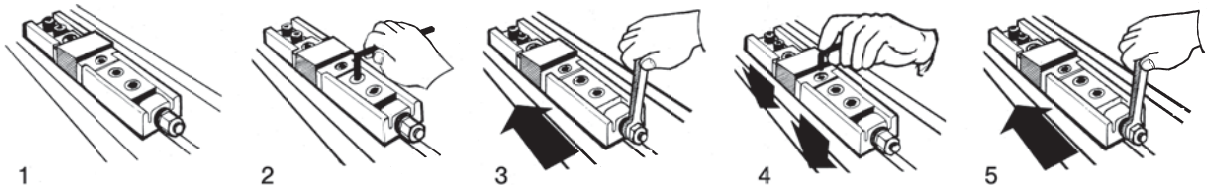

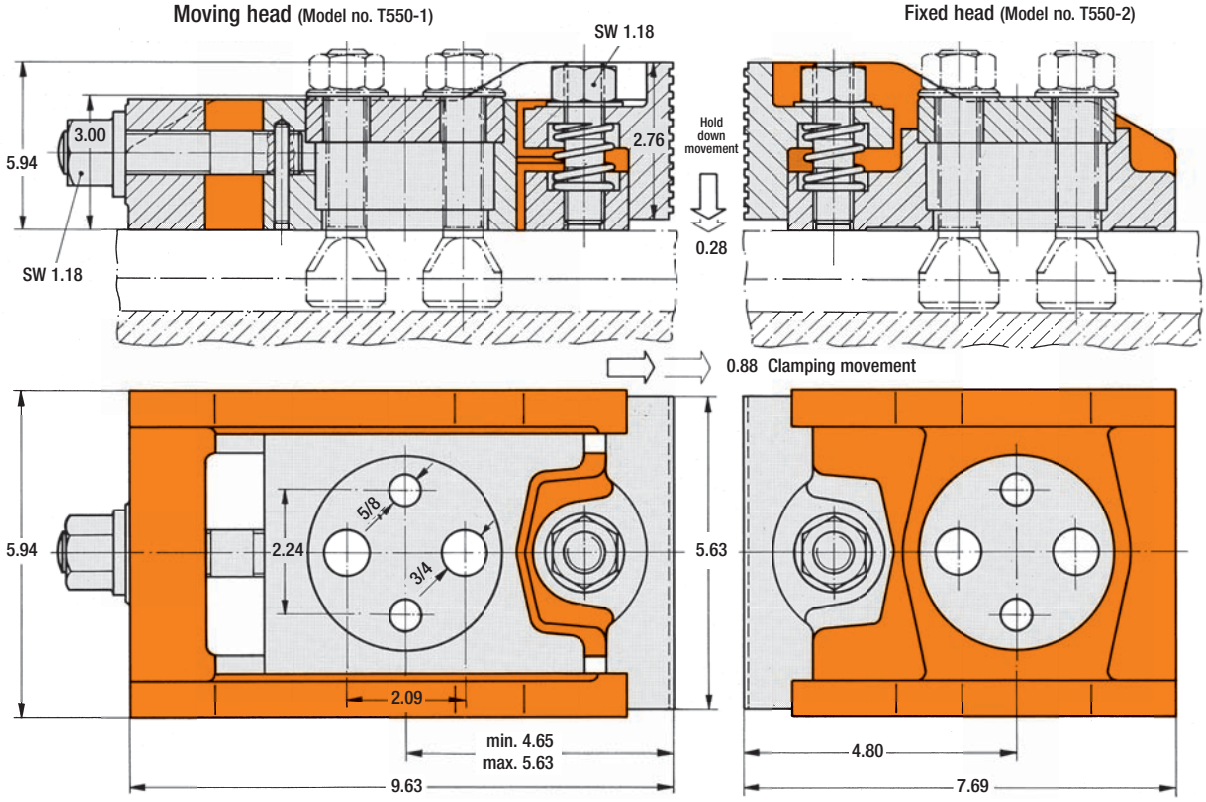

T-Slot Style

These clamps provide rapid height adjustment and positive holding. They are designed with a single-unit clamp head and base. The DE-STA-CO CARVER T-Slot Clamp is one single assembly – there are no loose parts.

When setting up, the safety lock on the back is released and the clamp lifted on the base to the desired height. When the clamp screw is turned, 100% of the force is transmitted to the work-piece. Backing off the clamp adjusting screw and releasing the safety lock and lifting the clamp head makes for rapid job changeover.

Formula to Calculate Clamping Force

$$\text{Force (lbf.)} = \frac{\text{Torque (in. lbf.)}}{\text{Thread Size (in.) x 0.12}}$$

Holding Capacity [lbs.]	Throat Depth a	Throat Depth b	Working Height C min.	Working Height C max.	Model No.	Max. Torque	Accessories standard equipment	Weight [lbs.]
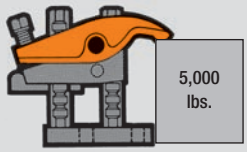 5,000 lbs.	0.55	1.30	1.00	4.00	T400-4	36 ft. lbs.	2 T-slot nuts with matching 14 mm bolt	4.00
			1.00	6.00	T400-6			4.25
			2.50	8.00	T400-8			4.60
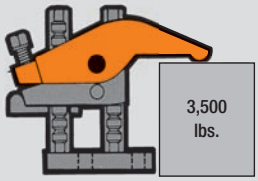 3,500 lbs.	2.24	2.87	0.50	4.00	T600-4	30 ft. lbs.		4.80
			0.50	6.00	T600-6			5.10
			2.00	8.00	T600-8			5.40
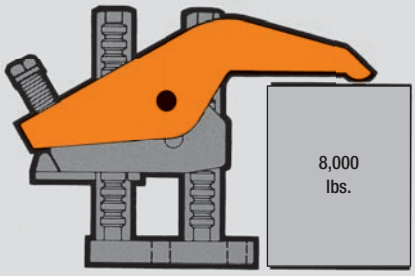 8,000 lbs.	1.73	2.68	0	6.00	T402-6	85 ft. lbs.	2 T-slot nuts with matching 18 mm bolt	14.00
			0	12.00	T402-12			17.70
			6.00	18.00	T402-18			19.40
			12.00	24.00	T402-24			20.00
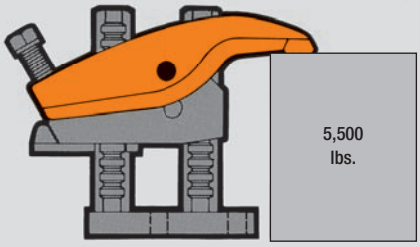 5,500 lbs.	3.90	4.84	0	6.00	T602-6	70 ft. lbs.		16.00
			0	12.00	T602-12			19.80
			6.00	18.00	T602-18			21.60
			12.00	24.00	T602-24			24.30
			18.00	30.00	T602-30			28.00

Available upon request

These clamps provide rapid height adjustment and positive holding. They are designed with a single-unit clamp head and base, providing up to 8,000 lbs. of positive holding capacity for workpieces up to 60” high. The design applies 100% of the screw force directly onto the workpiece far more than any strap clamp arrangement. Additionally, there is no searching for the correct riser block height. The DE-STA-CO CARVER T-Slot Clamp is one single assembly – there are no loose parts.

When setting up, the safety lock on the back is released and the clamp lifted on the base to the desired height. When the clamp screw is turned, 100% of the force is transmitted to the workpiece. Backing off the clamp adjusting screw and releasing the safety lock and lifting the clamp head makes for rapid job changeover.

Safety – No loose parts. Clamp and base are one unit.
Higher clamping force holds parts more securely and safely.

Speed – The clamp head adjusts much faster than an operator can select proper size spacers and bolts. Benefits include:

- Cuts set-up time by as much as 80%
- Reduces machine downtime
- Offers more rapid loading and unloading

Economy – Tool tip technology and digital control have reduced machining time. Why lose these advantages on long set-up times? T-Slot clamps can reduce set-up time by as much as 80%. Benefit: Money saved.

Ease of Operation – Loosen adjusting screw and release safety catch to adjust height instantly.

Versatility – Selection of bases gives clamping heights from 0" to 60". Two or more heads can be used on one base to position and hold down as well as support – ideal for fine height adjustment during set-up. Also eliminates riser blocks.

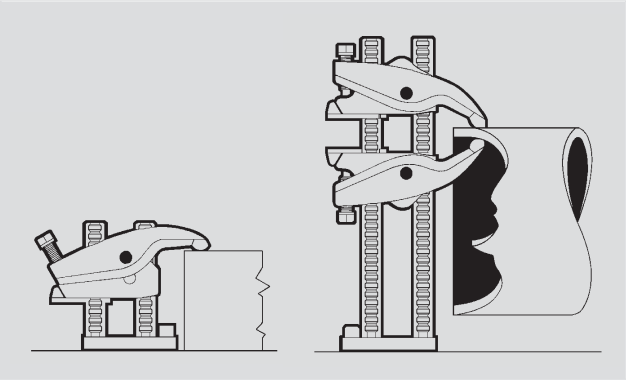

Ideal for use as manual die clamps. Eliminates the need for step blocks or riser blocks.

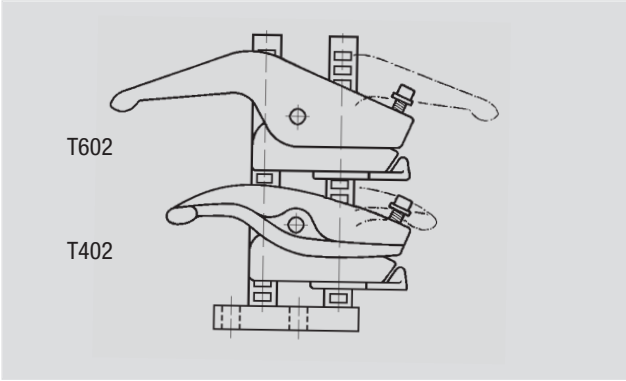

The T402 and T602 can be reversed on their bases to give added reach.

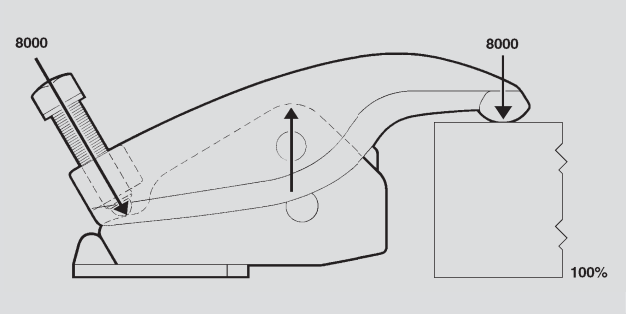

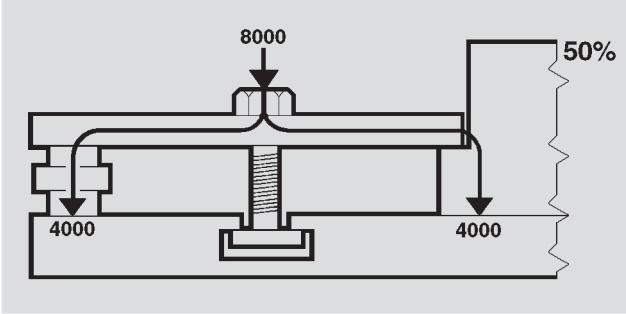

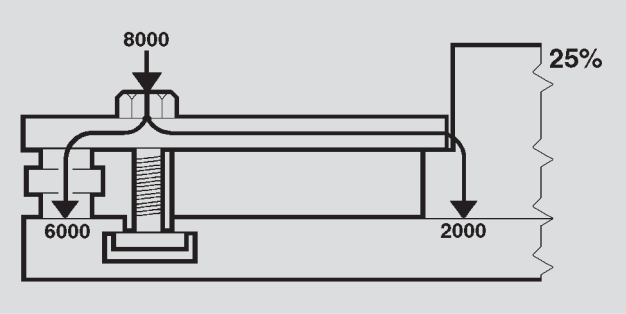

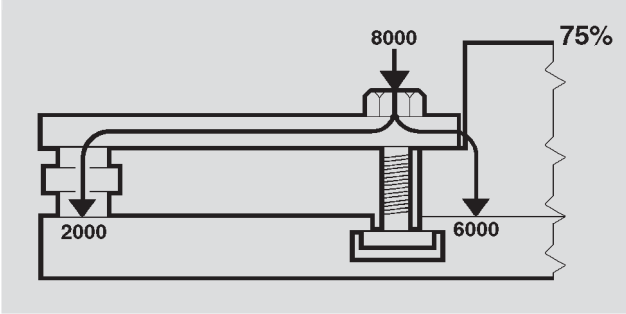

T-Slot Style

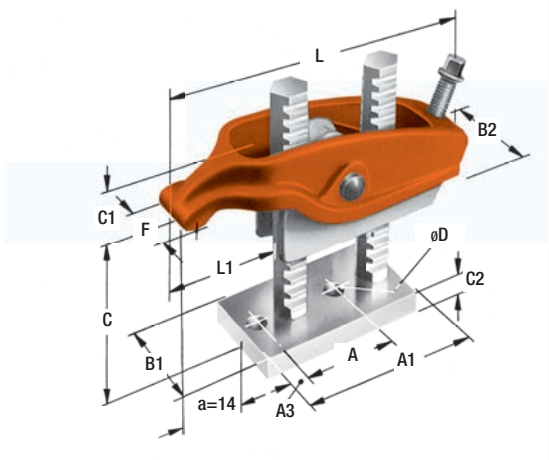

Model no. **T400-..**

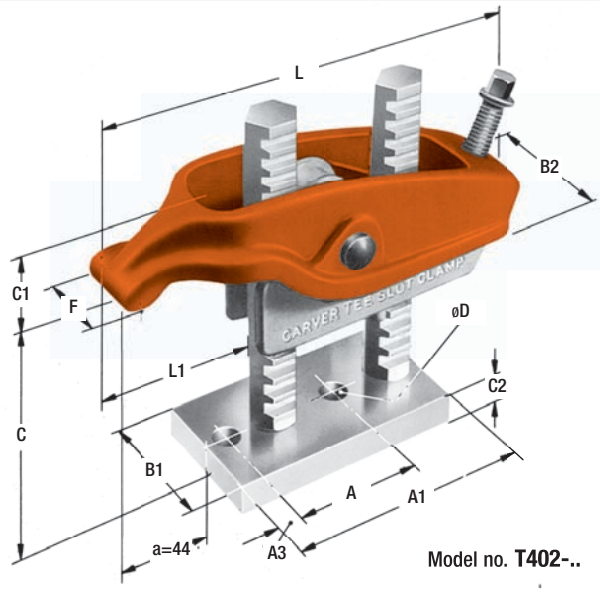

Model no. **T402-..**

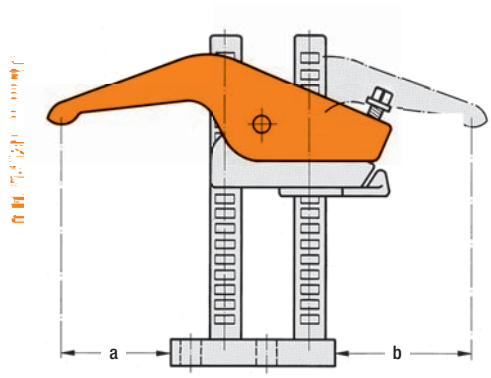

If the T402 is reversed on its base, the measurement of the throat depth will change.

	T400-..	T402-..
a	0.55	1.73
b	1.30	2.68

													Consisting of		Clamping
Model no.	A	A1	A3	B1	B2	C	C1	C2	øD	F	L	L1	1 x	2 x	Screw Size Ø
T400-4	2.12	3.78	0.45	2.00	1.03	1-4	1.09	0.63	0.53	1.02	6.31	1.44	400-2	400-4-1	12mm
T400-6	2.12	3.78	0.45	2.00	1.03	1-6	1.09	0.63	0.53	1.02	6.31	1.44	400-2	400-6-1	12mm
T400-8	2.12	3.78	0.45	2.00	1.03	2.5-8	1.09	0.63	0.53	1.02	6.31	1.44	400-2	400-8-1	12mm
T402-6	2.81	5.50	0.61	3.00	3.11	0-6	1.69	0.75	0.66	1.50	9.63	2.56	402-2	402-6-1	20mm
T402-12	2.81	5.50	0.61	3.00	3.11	0-12	1.69	0.75	0.66	1.50	9.63	2.56	402-2	402-12-1	20mm
T402-18	2.81	5.50	0.61	3.00	3.11	6-18	1.69	0.75	0.66	1.50	9.63	2.56	402-2	402-18-1	20mm
T402-24	2.84	5.50	0.61	3.00	3.11	12-24	1.69	0.75	0.66	1.50	9.63	2.56	402-2	402-24-1	20mm

Available upon request

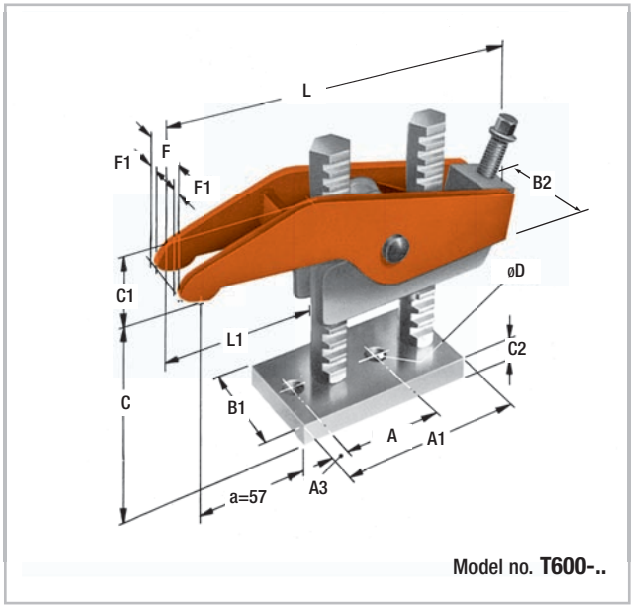

Model no. **T600-..**

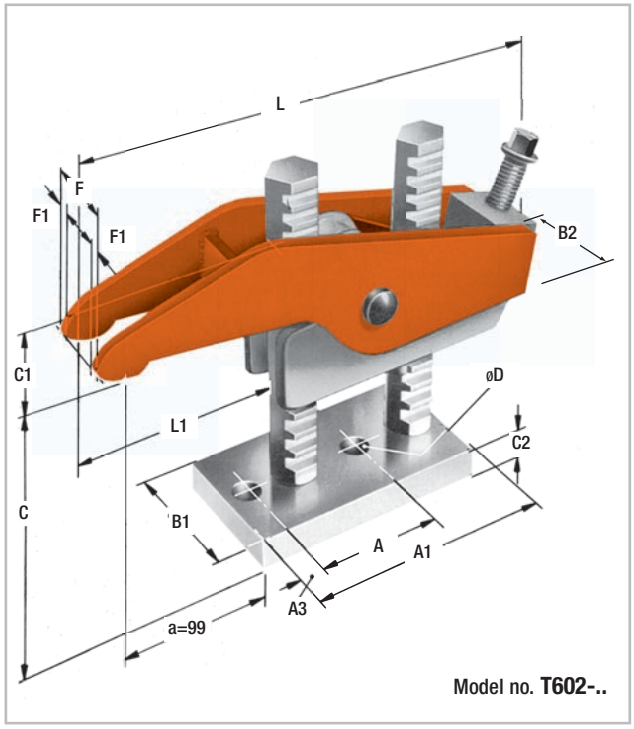

Model no. **T602-..**

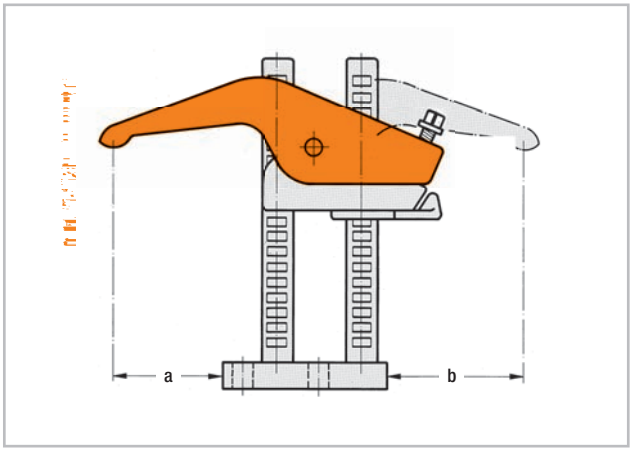

If the T602 is reversed on its base, the measurement of the throat depth will change.

	T600-..	T602-..
a	2.24	3.90
b	2.87	4.84

Model no.	A	A1	A3	B1	B2	C	C1	C2	øD	F	F1	L	L1	Consisting of 1 x	Consisting of 2 x	Clamping Screw Size Ø
T600-4	2.12	3.78	0.45	2.00	1.91	.5-4	1.50	0.63	0.53	1.97	0.41	7.88	2.94	600-2	600-4-1	12mm
T600-6	2.12	3.78	0.45	2.00	1.91	.5-6	1.50	0.63	0.53	1.97	0.41	7.88	2.94	600-2	600-6-1	12mm
T600-8	2.12	3.78	0.45	2.00	1.91	2-8	1.50	0.63	0.53	1.97	0.41	7.88	2.94	600-2	600-8-1	12mm
T602-6	2.81	5.50	0.61	3.00	3.53	0-6	2.75	0.75	0.66	2.68	0.51	12.13	4.50	602-2	402-6-1	20mm
T602-12	2.81	5.50	0.61	3.00	3.53	0-12	2.75	0.75	0.66	2.68	0.51	12.13	4.50	602-2	402-12-1	20mm
T602-18	2.81	5.50	0.61	3.00	3.53	6-18	2.75	0.75	0.66	2.68	0.51	12.13	4.50	602-2	402-18-1	20mm
T602-24	2.81	5.50	0.61	3.00	3.53	12-24	2.75	0.75	0.66	2.68	0.51	12.13	4.50	602-2	402-24-1	20mm
T602-30	2.81	5.50	0.61	3.00	3.53	18-30	2.75	0.75	0.66	2.68	0.51	12.13	4.50	602-2	402-30-1	20mm

Available upon request

Notes

NEW

Model 8031

Model 8031 is DE-STA-CO's newest clamp in a line of fully enclosed pneumatic clamps. Model 8031 is the fully enclosed version of the pneumatic clamp 803. With its patented design, this clamp can be used in the harshest environments. Cylinder is sensor ready, and the clamp can be hard piped.

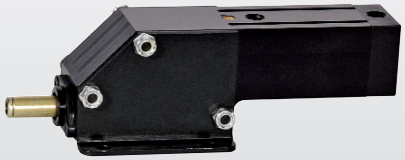

page 11.20

Product group – standard pneumatic clamps

	Model no.	Holding Capacity max. [lbs.]		Exerting Force [PSI]		Page
		Inner	Outer	Inner	Outer	
	802-U 807-U 810-U 812-U 847-U	200 375 600 100 1,000	110 275 290 55 480	200 350 600 135 750	160 150 400 960 450	11.8
	807-S 810-S 847-S	500 750 1,000	260 500 650	500 700 1,000	150 400 450	11.9
	8007-2F 8007-2FA	800 800	400 400	600 600	400 400	11.10
	8021 8071 8101	390 450 700	– – –	175 302 500	100 194 275	11.11
	846	750	–	750	500	11.12
	849	2,000	–	1,200	1,000	11.13

	Model no.	Holding Capacity max. [lbs.]		Exerting Force [PSI]		Page
		Inner	Outer	Inner	Outer	
	858	4,000	2,000	1,600	9000	11.14
	817-S 827-S	450 700	200	400 500	200 300	11.15
	817-U 827-U	375 600	200	320 500	200 300	11.16
	868	4,000		1,600	900	11.17
	803 803-M	600 600		600 600		11.18
	816 816-M	200 200		190 190		11.19

	Model no.	Holding Capacity max. [lbs.]	Exerting Force [PSI]	Page
	8031	2,000	600	11.20
	830 830-M	2,500 2,500	800 800	11.21
	850 850-M	16,000 16,000	2,050 2,050	11.22
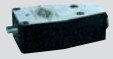	800 1200	850-1500 750-1600	70-150 70-150	11.24
	801			11.25
	870-2 871-2	2,000 2,000	170/350 170/350	11.26

Product group – standard pneumatic clamps

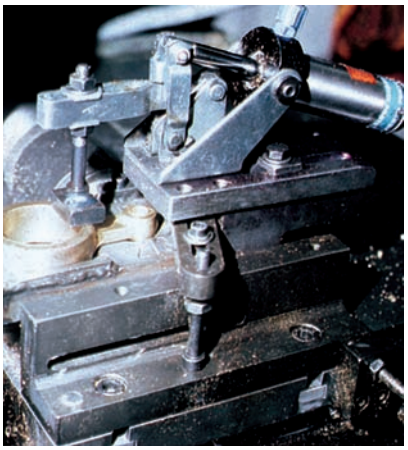

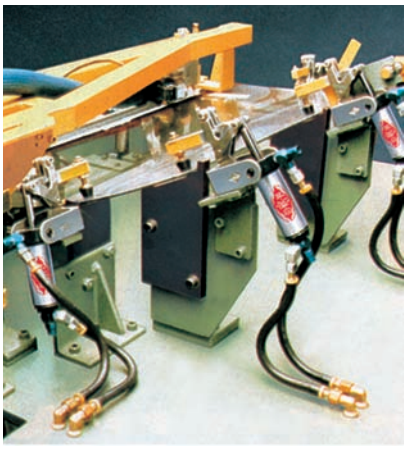

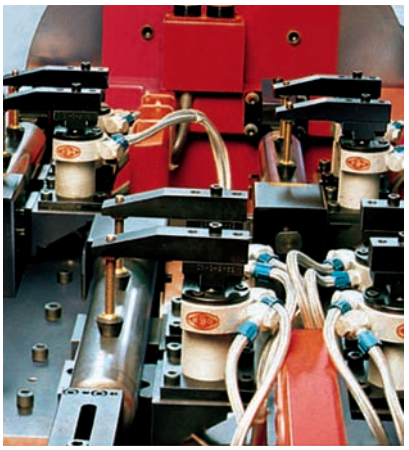

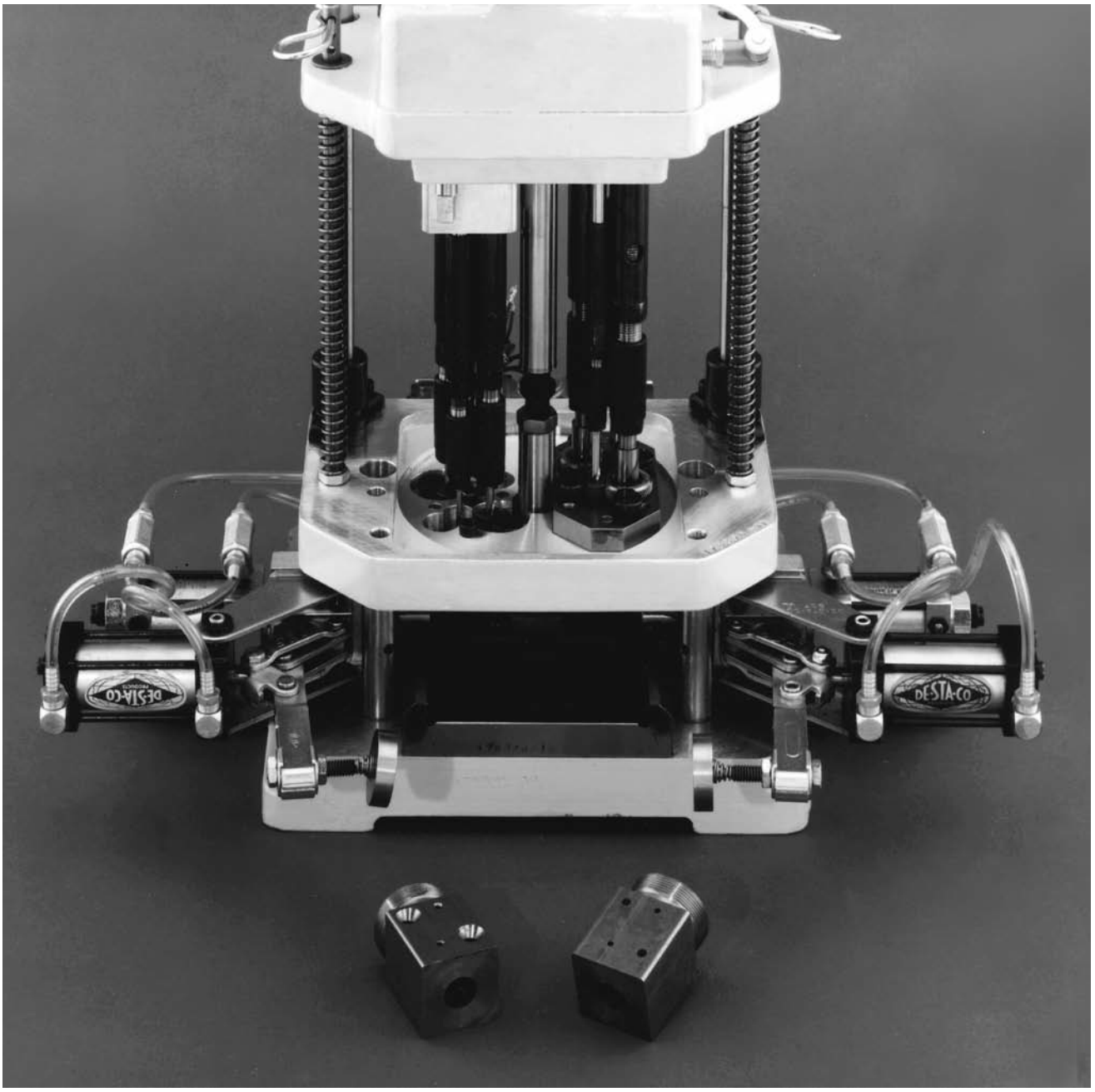

High safety standard

The DE-STA-CO pneumatic toggle action power clamps lock in the over-center position when clamped. If used correctly, these clamps remain closed even if exposed to vibrations, changing loads and air-pressure failure.

The main product features

- Ideal for the production environment
- Large opening angles
- High exerting forces and holding capacities
- Compact design
- Low air consumption

End position sensing

Sensors available for detecting the open/close position of the cylinder, making the clamp useful in automated production applications.

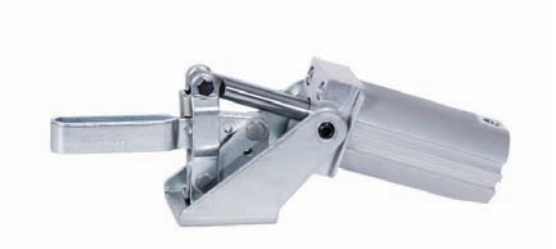

Model 807-U

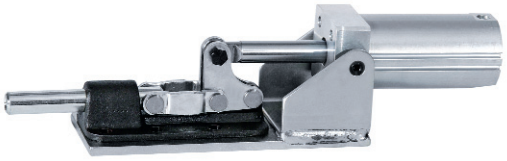

Model 830

Model 868

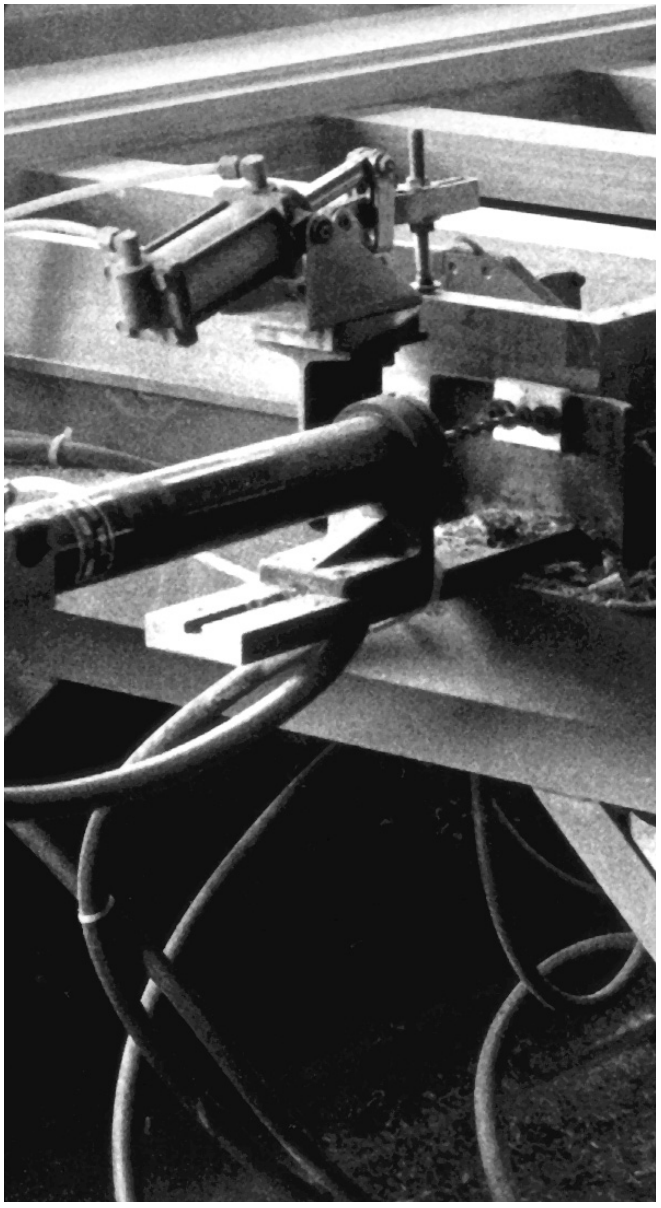

Pneumatic clamps for single and mass production

General

In additioin to the extensive range of manual clamping devices, DE-STA-CO also offers pneumatically operated power clamps.

Reduction of non-productive time

Reduction of non-productive time is of increasing importance in modern manufacturing processes, even at a small and medium production scale. Even a manually operated toggle clamp helps reduce considerably the non-productive time of clamping and releasing parts. This effect is multiplied by the amount of clamp ing stations. If several or even all clamping stations can be opened and closed simultaneously from a central point by “pressing a button,” the non production time for clamping becomes almost negligible. A control valve allows simultaneous operation of as many DE-STA-CO power clamps as required.

Constant and high exerting forces

Constant air pressure produces constant exerting forces. In many applications repeatable exerting forces are necessary to obtain constant quality of the parts to be manufactured. Only power clamps guarantee necessary repeatability of the exerting forces as well as the possibility of regulating the exerting forces by modifying the air supply without jeopardizing the clamp s holding capacity. High exerting forces are achieved without overexerting the operator – he simply actuates a control valve – hence no risk of fatigue or lack of consistency.

Quality and durability

DE-STA-CO stands for high quality clamps all over the world. Including power clamps. This applies both to the clamps‘ mechanical parts and to the pneumatic cylinders we use. Our cylinders are specially designed for our clamps, have chrome finished piston rods and are specially lubricated. Depending on the model, the clamps are equipped with stainless steel rivets, hardened and ground pivot pins, and maintenance-free high-performance bushings. This guarantees long service life and high cycle times.

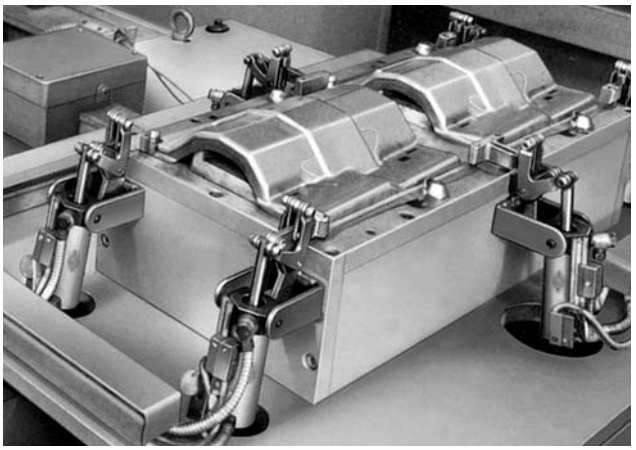

Model 817-U is equipped with an end position sensing system on a pneumatic clamping fixture.

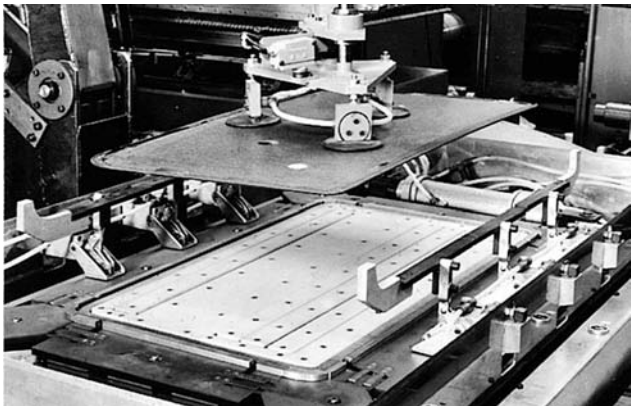

Models 807-U on a drilling fixture

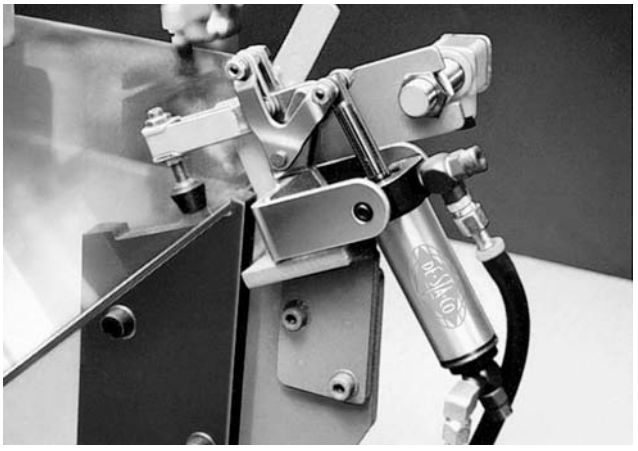

Model 817-U on a pneumatic clamping fixture

End position sensing of the pneumatic clamps for automated production

Different options

Model 807-S **with**
2 integral groove mounted sensors
(order separately)

Model 871 with
2 tie-rod mounted sensors
(order separately)

Remote control and end position sensing
A particularly interesting advantage of DE-STA-CO power clamps is the fact that they may be mounted on rather inaccessible places of clamping fixtures and they may be operated simultaneously while being controlled by a control valve. Power clamps with an end position sensing system allow fully automated operation with in controlled manufacturing processes.

Safety
DE-STA-CO power clamps are based on the toggle action principle (exceptions will be mentioned separately) and offer the same safety advantages as DE-STA-CO manual clamps: no risk of accidental opening of the clamp arm – even in case of a sudden pressure drop.

The toggle action principle with over-center locking guarantees safety during operation and protects the parts from damage. (Provided that the power clamps are mounted correctly and the air supply is reliable.)

Note: Most pneumatic products are now supplied with a magnetic ring on the piston as a standard feature for sensing the position of the cylinder (open/closed).

Seals: The standard cylinders are equipped with Buna-N seals and may be operated over a temperature range of -40º to +250º F. High temperature Viton® seals extend the temperature range from -20º to +400º F. These can be ordered upon request.

Pneumatic diagram

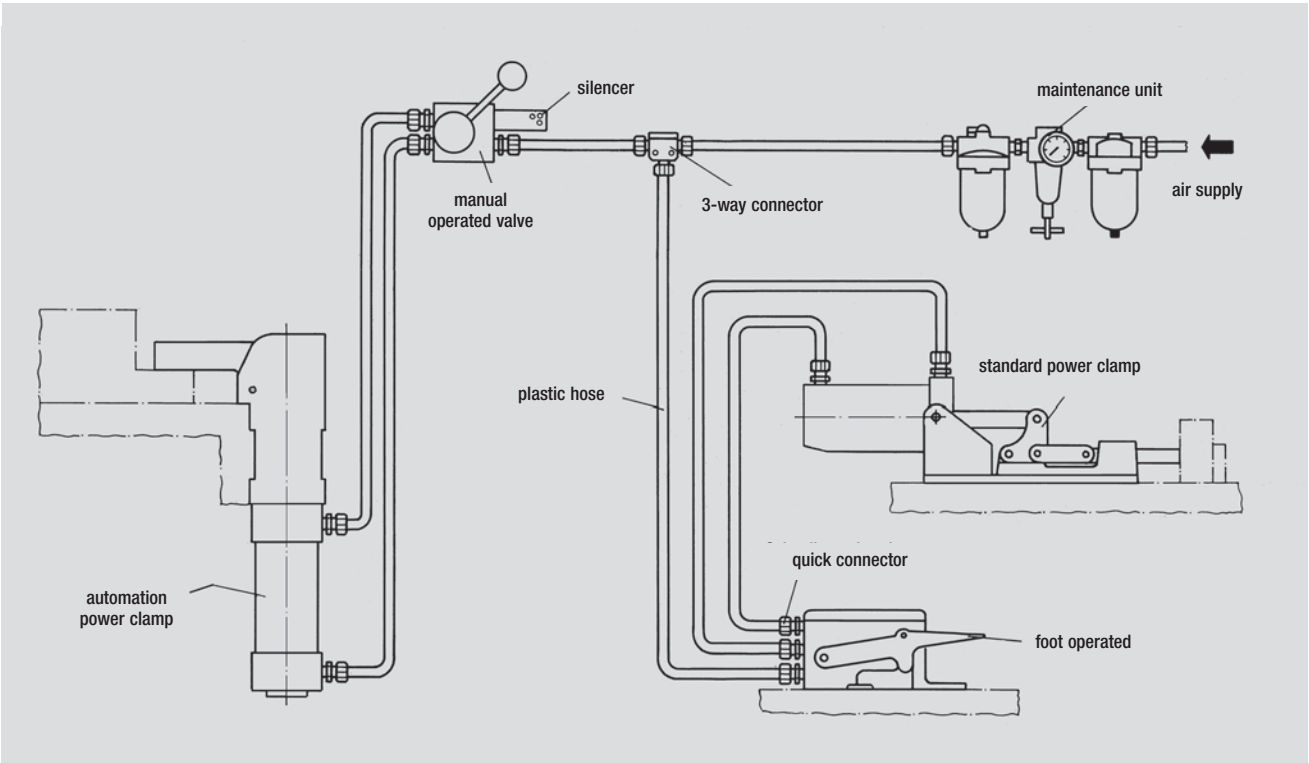

Pneumatic accessories see page 13.1 forward

Models 802-U, 807-U, 810-U, 812-U, 847-U

Cylinder horizontal

Model n	Maximum Holding Capacity Inner	Maximum Holding Capacity Outer	Exerting Force @ 80 PSI Inner	Exerting Force @ 80 PSI Outer	Max. Operating Pressure [PSI]	Port Size	Weight	Standard equipment
802-U	200	110	200	160	40	1/8 NPT	1.60	202208-M
807-U	375	275	350	150	55	1/8 NPT	2.30	507107 (flanged washers)
810-U	600	290	600	400	70	1/8 NPT	4.07	235106 (flanged washers)
812-U	100	55	135	96	80	10-32 NF	0.46	305208-M
847-U	1,000	480	750	450	60	1/8 NPT	8.93	247109 (flanged washers)

ALSO AVAILABLE	
With Viton Seals	Model 802-U-HT Model 807-U-HT Model 810-U-HT Model 812-U-HT Model 847-U-HT
Switch Options	Pages 13.1–13.4
See accessories beginning on pages 9.1 and 13.1.	
Available upon request, as are a number of other modifications	

Magnetic Ring Now A Standard Feature

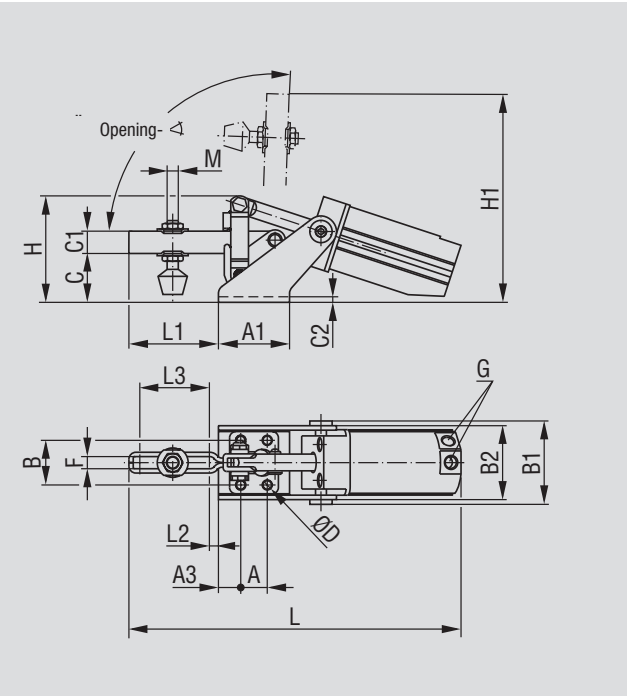

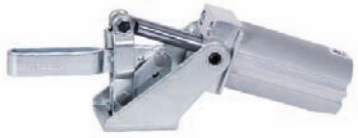

Model 807-U

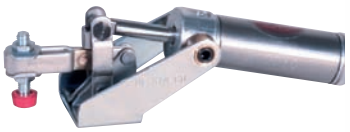

Model 812-U

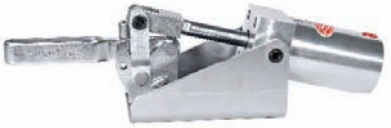

Model 847-U

Model no.	A	A1	A3	B	B1	B2	C	C1	C2	øD	F	H	H1	L	L1	L2	L3	M	Opening angle +/-5º
802-U	0.50	1.50	0.25	1.06	2.22	1.93	1.04	0.38	0.24	0.22	0.28	2.58	3.82	7.69	1.73	0.50	0.99	M6	95º
807-U	0.75	2.00	0.63	1.24	2.26	2.06	1.38	0.63	0.25	0.28	0.34	3.02	5.98	9.05	2.51	0.26	2.23	M8	92º
810-U	1.25	4.22	0.38	1.79	3.07	2.86	1.79	0.79	0.24	0.33	0.40	3.79	7.28	12.32	3.57	0.86	2.35	M10	95º
812-U	0.63	1.00	0.18	0.94	1.54	1.50	0.68	0.31	0.13	0.18	0.22	1.53	–	5.59	1.02	0.11	0.75	M5	90º
847-U	1.25	6.22	0.38	1.78	3.62	3.56	2.25	0.88	0.44	0.34	0.53	4.40	–	15.95	4.87	1.36	3.14	M12	95º

Models 807-S, 810-S, 847-S

Cylinder horizontal

Model no.	Maximum Holding Capacity Inner	Maximum Holding Capacity Outer	Exerting Force @ 80 PSI Inner	Exerting Force @ 80 PSI Outer	Max. Operating Pressure [PSI]	Port Size	Weight	Bolt Retainer
807-S	500	260	500	150	80	1/8 NPT	1.66	207107
810-S	750	500	700	400	80	1/8 NPT	4.07	210114
847-S	1,000	650	1,000	450	80	1/8 NPT	8.91	247110

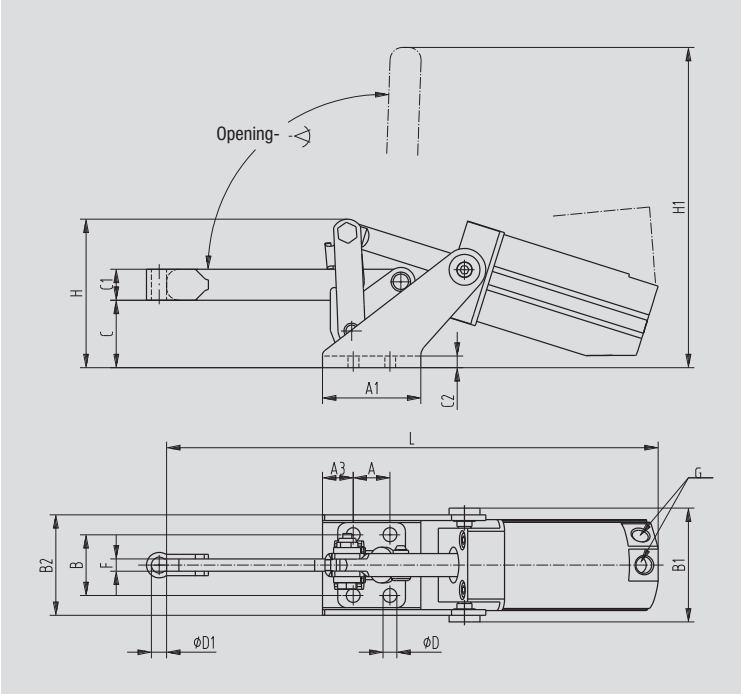

ALSO AVAILABLE	
With Viton Seals	Model 807-S-HT Model 810-S-HT Model 847-S-HT
Switch Options	Pages 13.1–13.4
See accessories beginning on pages 9.1 and 13.1.	
Available upon request, as are a number of other modifications	

Magnetic Ring Now A Standard Feature

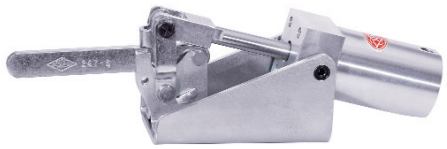

Model **847-S**

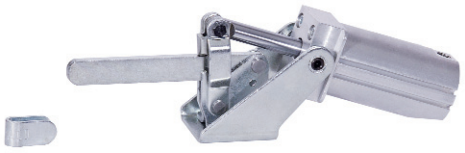

Model **807-S**

Model no.	A	A1	A3	B	B1	B2	C	C1	C2	øD	øD1	F	H	H1	L	L1			Opening angle +/-5º
807-S	0.75	2.00	0.63	1.24	2.26	2.06	1.38	0.63	0.25	0.28	0.34	0.25	3.02	6.52	10.02	3.17			92º
810-S	1.25	4.22	0.38	1.79	3.07	2.86	1.81	0.75	0.24	0.33	0.53	0.31	3.79	7.99	12.22	3.47			92º
847-S	1.25	6.22	0.38	1.78	3.62	3.56	2.25	0.88	0.44	0.34	0.56	0.38	4.40	–	15.90	4.87			92º

Models 8007-2F, 8007-2FA

NEW

Cylinder horizontal

Model no.	Maximum Holding Capacity Inner	Maximum Holding Capacity Outer	Exerting Force @ 80 PSI Inner	Exerting Force @ 80 PSI Outer	Max. Operating Pressure [PSI]	Port Size	Weight	Standard equipment
8007-2F	800	400	600	400	80	G 1/8	3.97	None
8007-2FA	800	400	600	400	80	G 1/8	3.97	2x SME0-1-LED 2x SMB-1 1x Assembly bar
8007-2FA is supplied with end position sensing								
Available upon request								

Model **8007-2F**

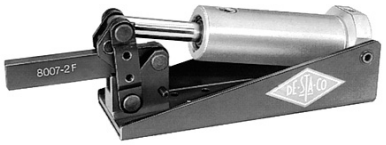

Power clamp with end position sensing

Standard equipment for the model 8007-2FA:
2 sensors (SME0-1-LED*)
2 fastening sets for sensors (SMB-1)
1 assembly bar

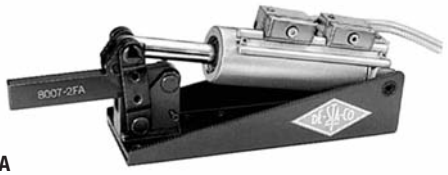

Model **8007-2FA**

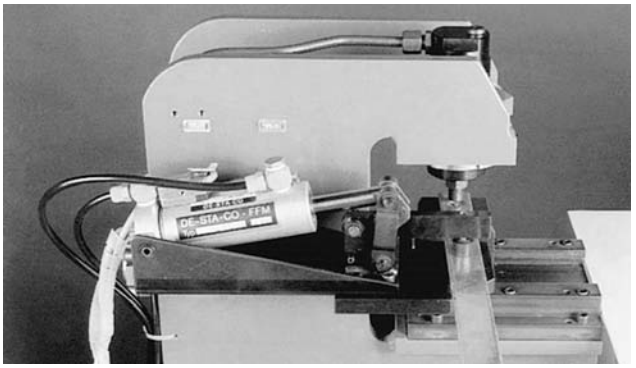

Power clamp with end position sensing at a rivet machine

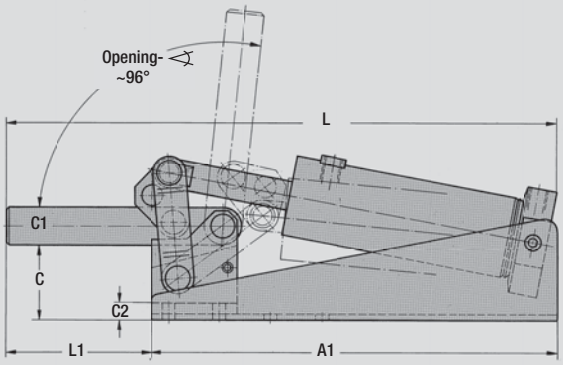

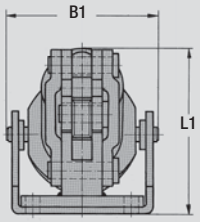

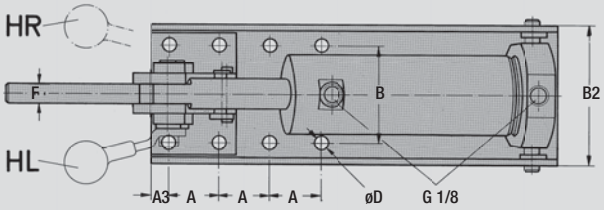

All models available with hand lever;
optional r.h. or l.h. Add **HR** or **HL** to the part no.

Model **8007-2FHL**

Model no.	A	A1	A3	B	B1	B2	C	C1	C2	øD	F	H	L	L1					Opening angle +/-5º
8007-2F	0.94	7.52	0.31	1.81	2.76	2.60	1.40	0.71	0.31	0.25	0.39	3.07	10.16	2.68					96º

NEW

Models 8021, 8071, 8101

Enclosed version

DE-STA-CO's newest family of pneumatic workholding hold-down clamps is ideal for dirty environments such as spot and MIG welding. Holding capacities exceed that of their parent clamps the 802, 807-UL and 810-U. These models also feature an enclosed, protected cylinder rod and linkages, as well as a lower and narrower mounting profile. The non-pivoting cylinder can be hard-piped into fixtures. Maximum intermittent temperature rating is 230º F. Clamps come with a magnetic ring for sensing as a standard feature. Switches must be ordered separately.

Model no.	Maximum Holding Capacity Inner	Maximum Holding Capacity Outer	Exerting Force @ 80 PSI Inner	Exerting Force @ 80 PSI Outer	Max. Operating Pressure [PSI]	Port Size	Weight	Flanged Washers
8021	390	–	175	100	175	1/8 NPT	2.30	8021122
8071	450	–	302	194	120	1/8 NPT	2.80	507107
8101	700	–	500	275	110	1/8 NPT	7.30	8101122

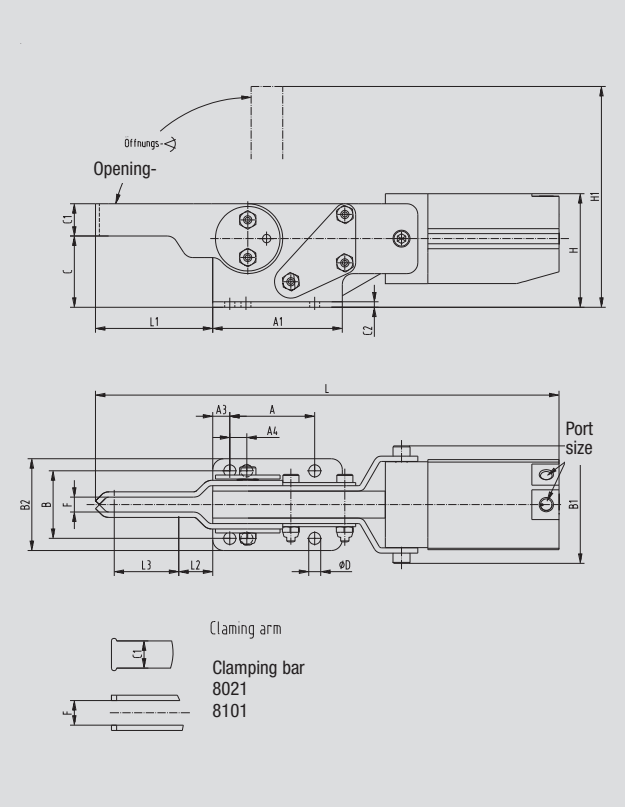

ALSO AVAILABLE	
With Viton Seals	Model 8021-HT Model 8071-HT Model 8101-HT
Switch Options	Pages 13.1–13.4
See accessories beginning on pages 9.1 and 13.1.	
Available upon request, as are a number of other modifications	

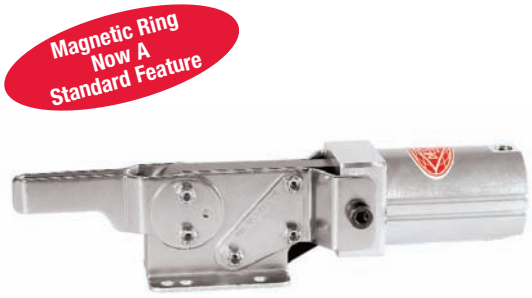

Model no.	A	A1	A3	A4	B	B1	B2	C	C1	C2	øD	F	H	H1	L	L1	L2	L3	M	Opening angle +/-5º
8021	0.79	1.97	0.47	–	1.50	2.25	1.88	1.56	0.63	0.13	0.21	0.56	2.18	4.45	9.37	2.25	0.44	1.81	1/4 or M6	90º
8071	1.97	3.00	0.39	0.39	1.56	2.81	2.12	1.65	0.75	0.13	0.28	0.34	2.59	5.12	10.90	2.72	0.45	1.96	5/16 or M8	90º
8101	3.54	4.75	0.59	–	2.20	3.63	2.86	2.50	1.00	0.12	0.34	0.75	3.46	7.52	15.54	4.00	0.59	3.41	3/8 or M10	90º

Model 846

Model no.	Maximum Holding Capacity Inner	Maximum Holding Capacity Outer	Exerting Force @ 80 PSI Inner	Exerting Force @ 80 PSI Outer	Max. Operating Pressure [PSI]	Port Size	Weight	Standard equipment
846	750	500	750	500	125	1/8 NPT	4.18	None

ALSO AVAILABLE	
With Viton Seals	Model 846-HT
Switch Options	Pages 13.1–13.4
See accessories beginning on pages 9.1 and 13.1.	
Available upon request, as are a number of other modifications	

Model 846 is the pneumatic version of manual clamp Model 516. Its compact size is similar to that of Model 807 but with more than twice the clamping capacity.

Magnetic Ring Now A Standard Feature

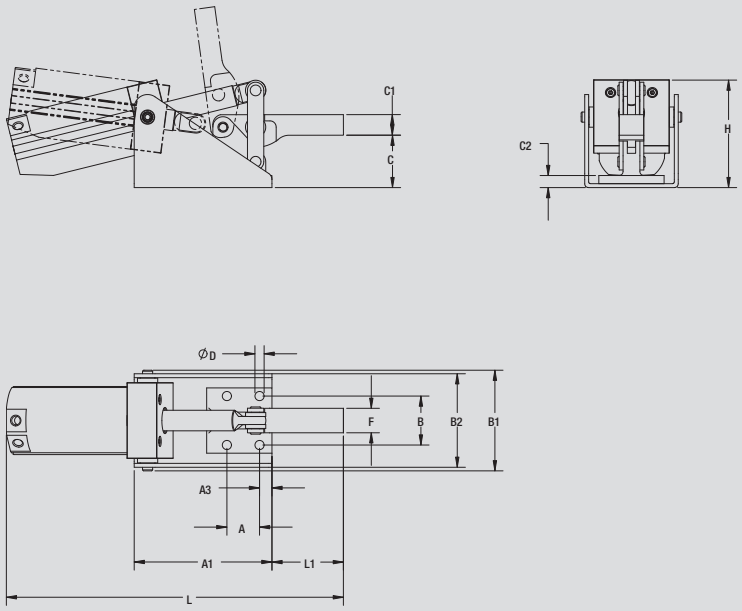

Model no.	A	A1	A3	B	B1	B2	C	C1	C2	øD	F	H	L	L1					Opening angle +/-5º
846	1.00	4.22	0.38	1.50	3.07	2.87	1.61	0.63	0.37	0.28	0.75	3.29	10.80	2.19					90º

Model no.	Maximum Holding Capacity Inner	Maximum Holding Capacity Outer	Exerting Force @ 80 PSI Inner	Exerting Force @ 80 PSI Outer	Max. Operating Pressure [PSI]	Port Size	Weight	Standard equipment
849	2,000	–	1,200	1,000	125	1/8 NPT	14.83	None

A cam mechanism in the linkage of this unique clamp will accommodate up to a 1/2" part size variation. Once set to the nominal (or average) part size, parts up to 1/4" larger or 1/4" smaller can be clamped without changing the setting. Bar opens 90º. Clamp bar can be machined or altered to suit the application.

ALSO AVAILABLE	
With Magnetic Ring	Model 849-MR
With Viton Seals	Model 849-HT
Switch Options	Pages 13.1–13.4
See accessories beginning on pages 9.1 and 13.1.	
Available upon request, as are a number of other modifications	

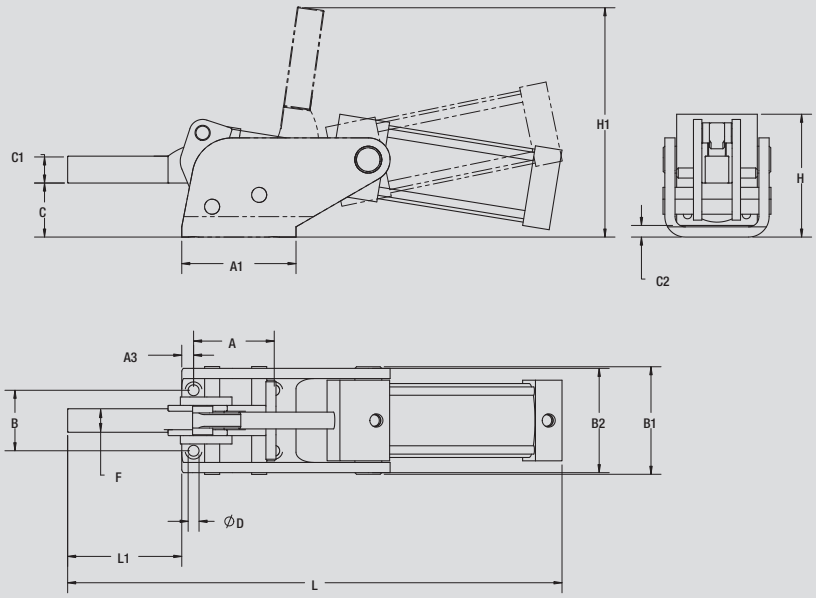

Model no.	A	A1	A3	B	B1	B2	C	C1	øD	F	H	H1	L	L1					Opening angle +/-5º
849	3.00	4.25	0.44	2.25	4.01	3.88	2.01	0.94	0.41	0.82	4.57	8.53	18.36	4.22					90º
Available upon request																			

Model 858

Cylinder horizontal

Model no.	Maximum Holding Capacity Inner	Maximum Holding Capacity Outer	Exerting Force @ 80 PSI Inner	Exerting Force @ 80 PSI Outer	Max. Operating Pressure [PSI]	Port Size	Weight	Standard equipment
858	4,000	2,000	1,600	900	200	1/8 NPT	16.11	None

ALSO AVAILABLE	
With Viton Seals	Model 858-HT
Switch Options	Pages 13.1–13.4
See accessories beginning on pages 9.1 and 13.1.	
Available upon request, as are a number of other modifications	

The pneumatic version of Model 568, this heavy-duty model uses forged alloy steel links and steel components machined to close tolerances. Base is a 1/2" thick steel plate. All pivot points have hardened bushings fitted with hardened steel pivot pins. The 1 x 1-3/8" steel hold-down bar may be cut, drilled and tapped or welded to adapt to application. Bar opens 92º.

Magnetic Ring Now A Standard Feature

Model **858**

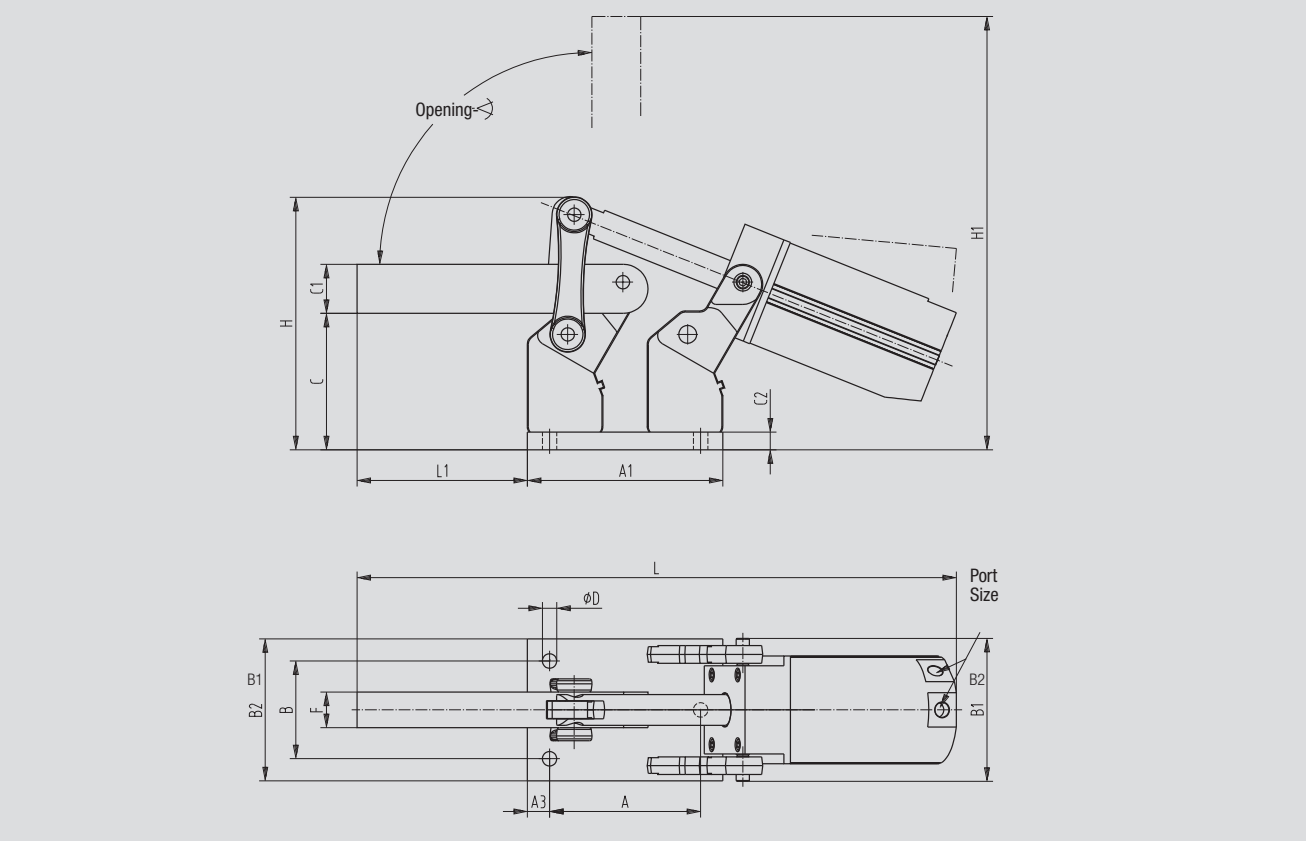

Model no.	A	A1	A3	B	B1	B2	C	C1	C2	øD	F	H	L	L1					Opening angle +/-5º
858	4.25	5.60	0.63	2.75	3.88	4.00	3.84	1.38	0.50	0.41	1.00	7.12	18.19	4.81					92º

NEW

Models 817-S, 827-S

Cylinder vertical

Model no.	Maximum Holding Capacity Inner	Maximum Holding Capacity Outer	Exerting Force @ 80 PSI Inner	Exerting Force @ 80 PSI Outer	Max. Operating Pressure [PSI]	Port Size	Weight	Standard equipment
817-S	450	200	400	200	100	1/8 NPT	2.31	207105
827-S	700	–	500	300	110	1/8 NPT	4.71	210114

Many times it is desirable to use a right angle model where space dictates. Applications such as rotary indexing tables and injection molding operations are examples. All three models can be mounted on the side of the fixture and Models 817 and 827 can also be top mounted. Model 817 is the pneumatic version of Model 317, and it accommodates any 5/16-18 spindle assembly (not included). Model 827 can accept any 3/8-16 spindle accessory (not included).

ALSO AVAILABLE	
With Viton Seals	Model 817-S-HT
Switch Options	Pages 13.1–13.4
See accessories beginning on pages 9.1 and 13.1.	
Available upon request, as are a number of other modifications	

Mounting Options

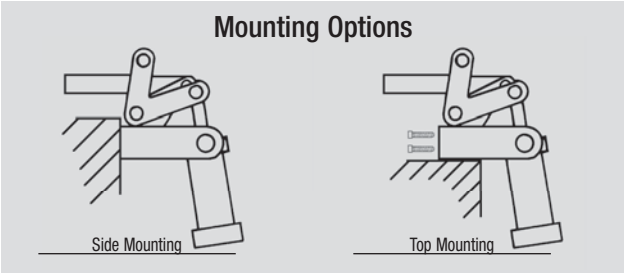

Note: Use two bolts in the "side" mounting holes to secure mounting bracket when "top" mounting.

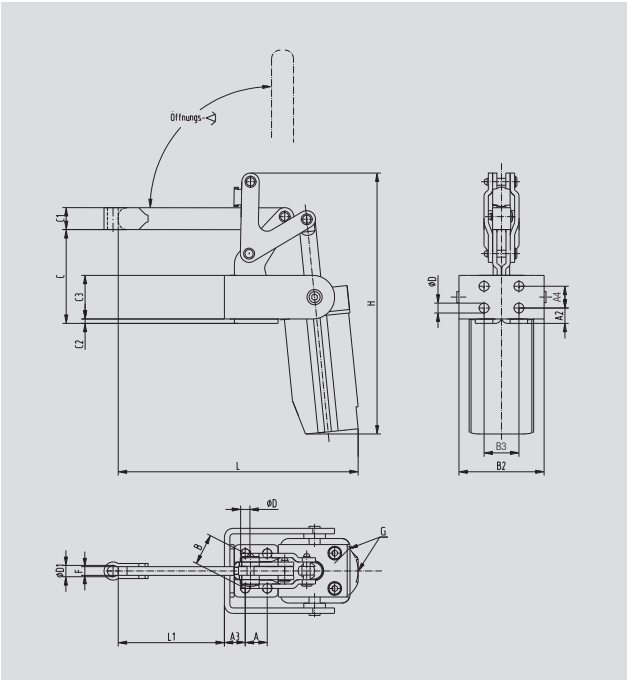

Magnetic Ring Now A Standard Feature

Model **817-S**

Model no.	A	A2	A3	A4	B	B2	B3	C	C1	C2	C3	øD	øD1	F	H	L	L1		Opening angle +/-5º
817-S	0.63	0.44	0.60	0.63	1.00	2.44	1.00	2.69	0.63	0.13	1.25	0.27	0.34	0.25	7.53	6.89	3.04		90º
827-S	1.25	0.50	0.66	1.25	1.75	2.94	1.75	3.91	0.75	0.13	2.00	0.34	0.53	0.31	9.50	8.60	3.18		88º

Models 817-U, 827-U

Cylinder vertical

Model no.	Maximum Holding Capacity Inner	Maximum Holding Capacity Outer	Exerting Force @ 80 PSI Inner	Exerting Force @ 80 PSI Outer	Max. Operating Pressure [PSI]	Port Size	Weight	Standard equipment
817-U	375	200	320	200	80	1/8 NPT	2.31	507107
827-U	600	–	500	300	95	1/8 NPT	4.71	

ALSO AVAILABLE	
With Viton Seals	Model 817-U-HT
Switch Options	Pages 13.1–13.4
See accessories beginning on pages 9.1 and 13.1.	
Available upon request, as are a number of other modifications	

Mounting Options

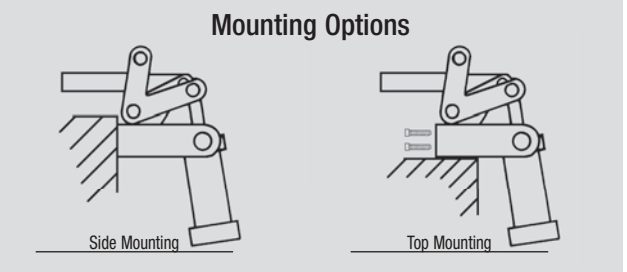

Note: Use two bolts in the "side" mounting holes to secure mounting bracket when "top" mounting.

Magnetic Ring Now A Standard Feature

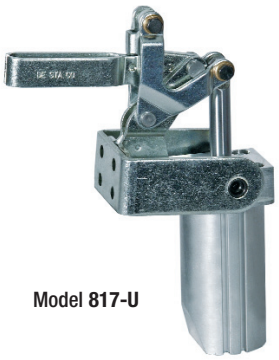

Model **817-U**

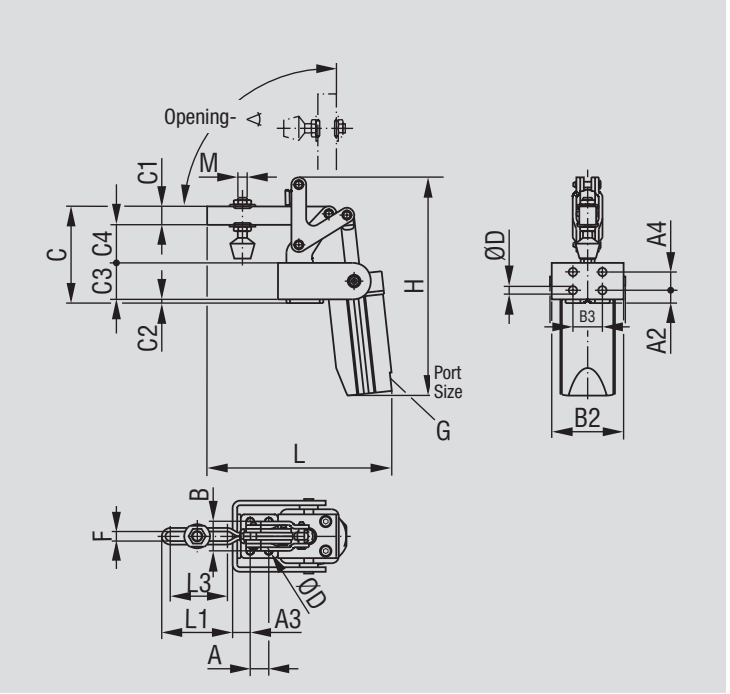

Model no.	A	A2	A3	A4	B	B2	B3	C	C1	C2	C3	C4	øD	H	L	L1	L3	M	Opening angle +/-5º
817-U	0.63	0.44	0.60	0.63	1.00	2.44	1.00	3.31	0.63	0.12	1.38	1.30	0.27	7.53	6.20	2.37	1.97	M8	90º
827-U	1.25	0.38	0.66	1.25	1.75	2.94	1.75	4.72	0.79	0.13	2.00	1.76	0.34	9.50	8.69	3.27	2.35	M10	90º

Model 868

Cylinder vertical

Model no.	Maximum Holding Capacity Inner	Maximum Holding Capacity Outer	Exerting Force @ 80 PSI Inner	Exerting Force @ 80 PSI Outer	Max. Operating Pressure [PSI]	Port Size	Weight	Standard equipment
868	4,000	–	1,600	900	200	1/8 NPT	17.00	None

ALSO AVAILABLE	
With Viton Seals	Model 868-HT
Switch Options	Pages 13.1–13.4
See accessories beginning on pages 9.1 and 13.1.	
Available upon request, as are a number of other modifications	

Model **868**

Bar can be machined or welded

Magnetic Ring Now A Standard Feature

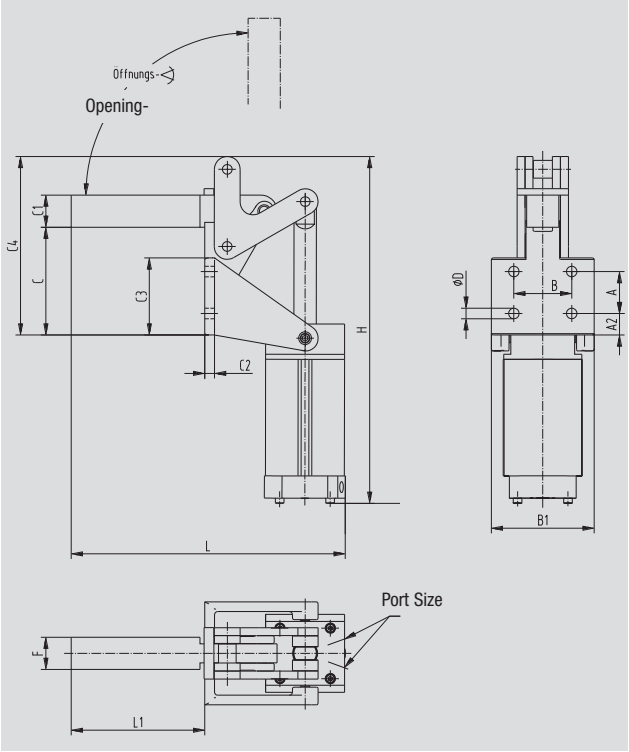

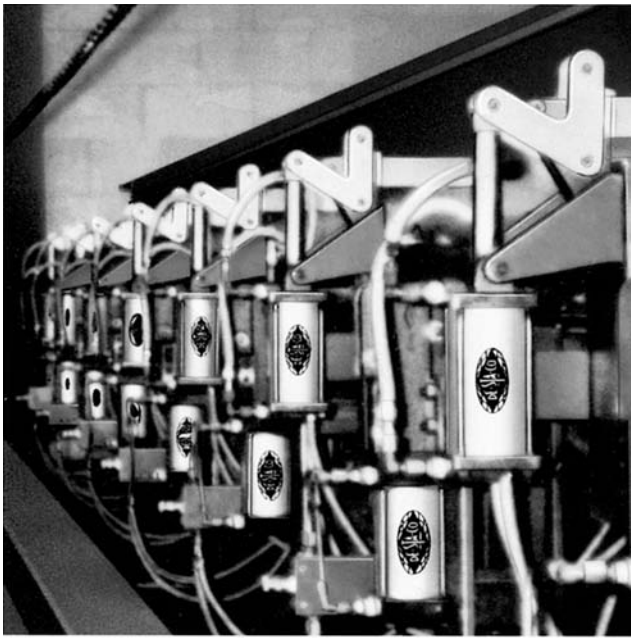

Power clamp model 868 in an automated welding fixture for clamping of longitudinal beams.

Model no.	A	A2	B	B1	C	C1	C2	C3	C4	øD	F	H	L	L1					Opening angle +/-5º
868	1.63	0.89	2.25	4.00	4.20	1.25	0.38	3.00	1.50	0.41	1.25	14.16	10.08	4.69					90º

Models 803, 803-M

Straight-line action power clamp

Model no.	Maximum Holding Capacity [lbs.]	Exerting Force @ 80 PSI	Max. Operating Pressure [PSI]	Plunger Travel	Port Size	Weight	Recommended (not supplied)
803	600	600	80	0.75	1/8 NPT	1.86	225208
803-M	600	600	80	0.75	G1/8	1.86	225208-M

ALSO AVAILABLE	
With Viton Seals	Model 803-HT
Switch Options	Pages 13.1–13.4
See accessories beginning on pages 9.1 and 13.1.	
Available upon request, as are a number of other modifications	

This compact plunger action clamp is less than 10" long but provides a holding capacity of up to 600 lbs. The 7/16" diameter plunger extends 3/4" to a locked position. The end of the plunger is drilled and tapped for a 5/16-18 spindle (not supplied).

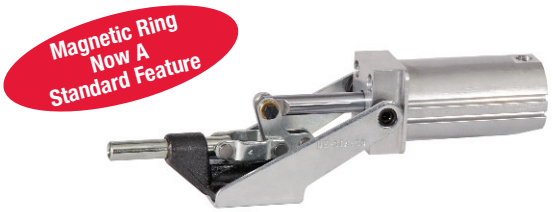

Model **803**

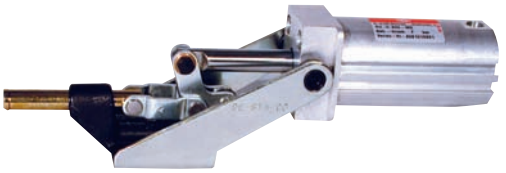

Model **803-M**

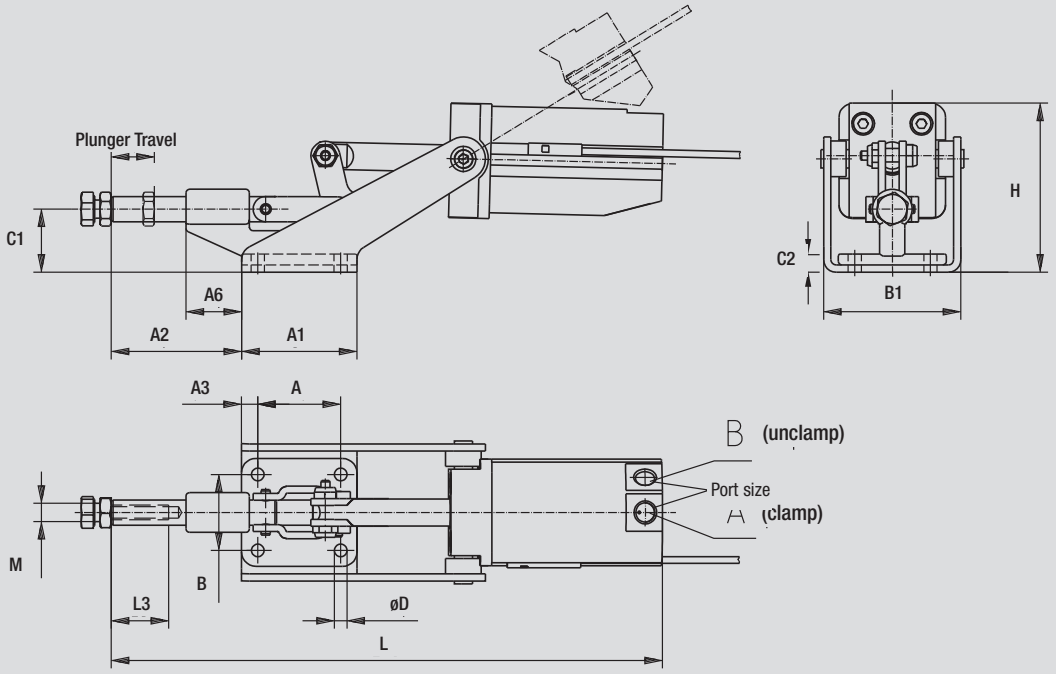

Model no.	A	A1	A2	A3	A6	B	B1	C1	C2	øD	H	L	L3	M
803	1.44	2.00	2.16	0.28	0.95	1.31	2.37	1.09	0.31	0.27	2.96	9.91	1.00	5/16-18
803-M	1.44	2.00	2.16	0.28	0.95	1.31	2.37	1.09	0.31	0.27	2.96	9.91	1.00	M8

Available upon request

Models 816, 816-M

Straight-line action power clamp

Model no.	Maximum Holding Capacity [lbs.]	Exerting Force @ 80 PSI	Max. Operating Pressure [PSI]	Plunger Travel	Port Size	Weight	Standard equipment
816	200	190	60	0.44	10-32 NF	0.43	105203
816-M	200	190	60	0.44	10-32 NF	0.43	205208-M

ALSO AVAILABLE	
With Viton Seals	Model 816-HT
Switch Options	Pages 13.1–13.4
See accessories beginning on pages 9.1 and 13.1.	
Available upon request, as are a number of other modifications	

Magnetic Ring Now A Standard Feature

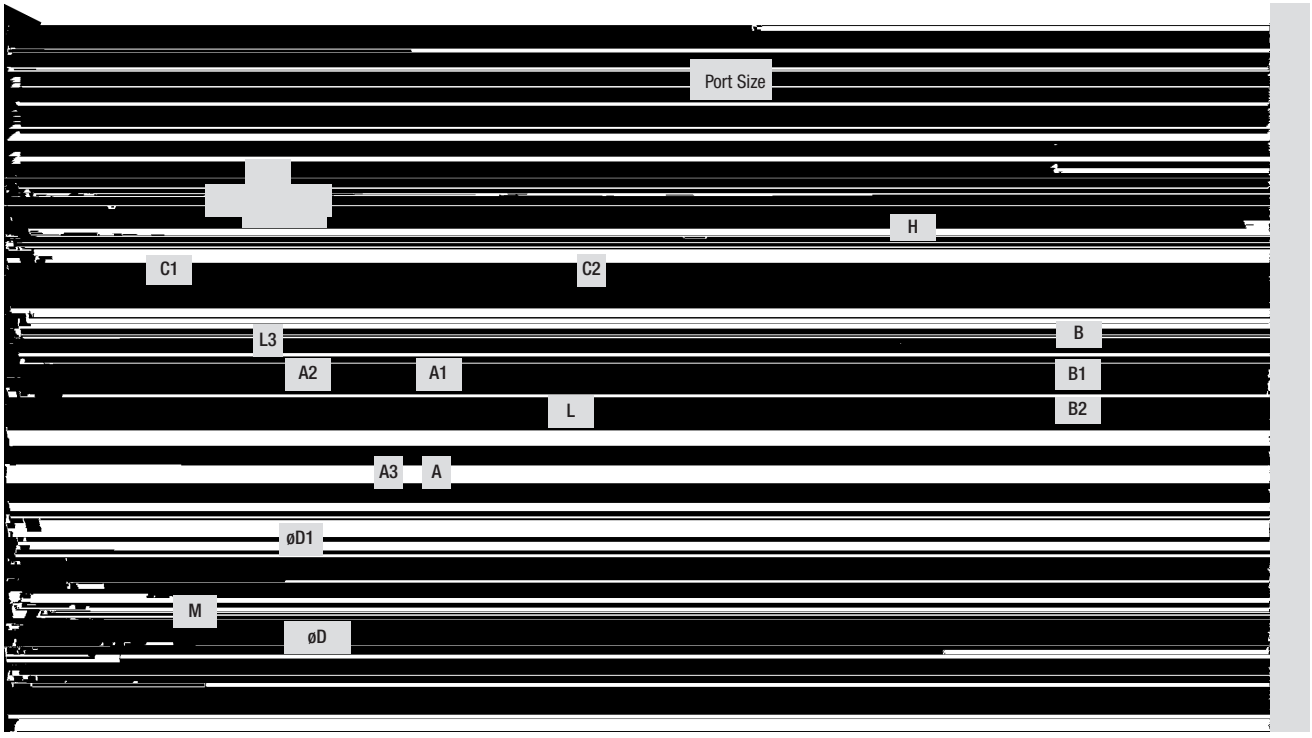

Model no.	A	A1	A2	A3	B	B1	B2	C1	C2	øD	øD1	H	L	L3	M
816	0.63	1.32	1.30	0.32	0.63	1.31	1.54	0.56	0.15	0.17	0.25	1.51	6.22	0.50	8-32
816-M	0.63	1.32	1.29	0.32	0.63	1.31	1.54	0.56	0.15	0.17	0.25	1.51	6.21	0.50	M4

Available upon request

Model 8031

NEW

Model no.	Maximum Holding Capacity [lbs.]	Exerting Force @ 80 PSI	Max. Operating Pressure [PSI]	Plunger Travel	Port Size	Weight	Recommended (not supplied)
8031	2,000	600	80	0.75	1/8 NPT	2.58	225208-M

ALSO AVAILABLE	
Switch Options	Pages 13.1–13.4
See accessories beginning on pages 9.1 and 13.1.	

Model 8031 is DE-STA-CO's newest clamp in a line of fully enclosed pneumatic clamps. Model 8031 is the fully enclosed version of the pneumatic clamp 803. With its patented design, this clamp can be used in the harshest environments. Cylinder is sensor ready, and the clamp can be hard piped.

Magnetic Ring Now A Standard Feature

- Light-weight compact design allows clamp to be used in tight areas
- Holding capacity up to 2000 lbs.
- Cylinder is sensor ready
- Fully enclosed design allows clamp to be used in the harshest environments
- Patent #6,755,406
- Rod wiper keeps grease in and contaminants out
- Can be hard piped – no need for hoses

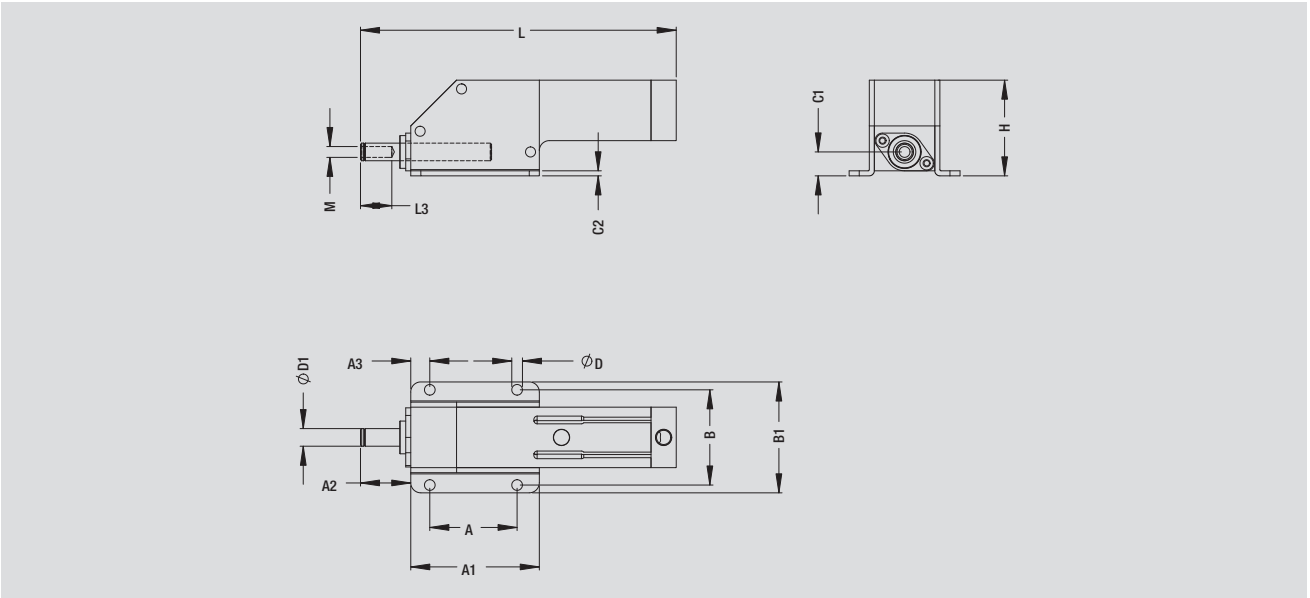

Model no.	A	A1	A2	A3	B	B1	C1	C2	øD	øD1	H	L	L3	M
8031	2.17	3.19	1.25	0.47	2.36	2.75	0.59	0.13	0.27	0.44	2.37	7.80	0.75	M8

Models 830, 830-M

Straight-line action power clamp

Model no.	Maximum Holding Capacity [lbs.]	Exerting Force @ 80 PSI	Max. Operating Pressure [PSI]	Plunger Travel	Port Size	Weight	Recommended (not supplied)
830	2,500	800	145	1.25	1/8 NPT	6.14	210203
830-M	2,500	800	145	1.25	1/8 NPT	6.14	210203-M

The 5/8" diameter plunger travels forward 1-1/4" from an open to a closed and locked position. Plunger is drilled and tapped to accept a 3/8-16 spindle (not supplied) or to mount your custom fixture.

ALSO AVAILABLE	
With Viton Seals	Model 830-HT
Switch Options	Pages 13.1–13.4
See accessories beginning on pages 9.1 and 13.1.	
Available upon request, as are a number of other modifications	

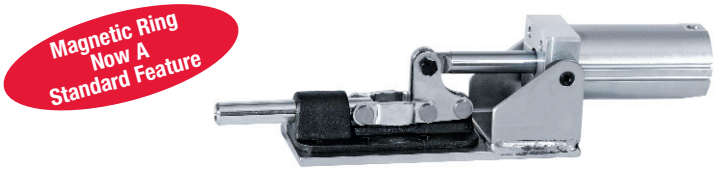

Model **830**

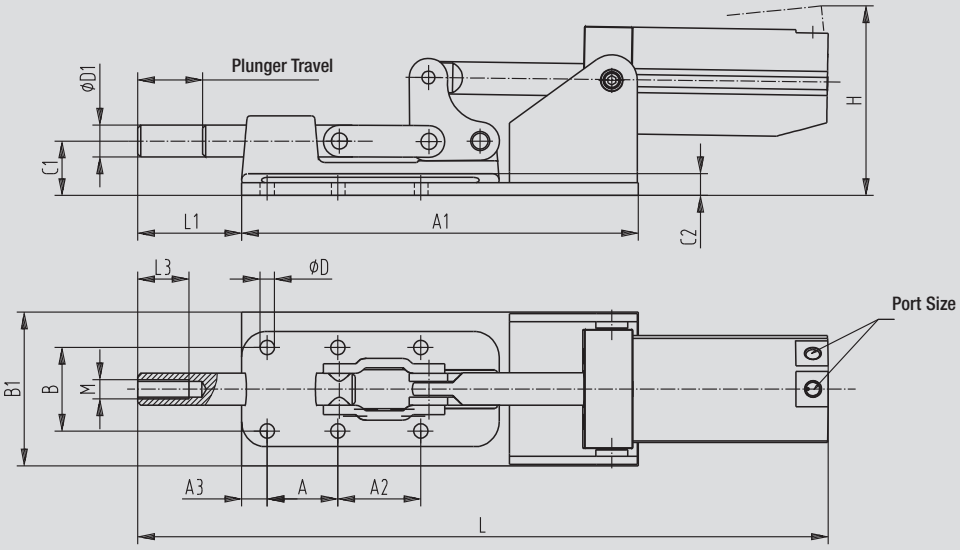

Model no.	A	A1	A2	A3	B	B1	C1	C2	øD	øD1	H	L	L3	M
830	1.38	7.75	1.62	0.50	1.62	3.07	1.06	0.44	0.34	0.62	3.26	14.08	1.25	3/8-16
830-M	1.38	7.75	1.62	0.50	1.62	3.07	1.06	0.44	0.34	0.62	3.26	14.08	1.25	M10

Available upon request

Models 850, 850-M

Straight-line action power clamp

Model no.	Maximum Holding Capacity [lbs.]	Exerting Force @ 80 PSI	Max. Operating Pressure [PSI]	Plunger Travel	Port Sizt	Weight	Recommended (not supplied)
850	16,000	2,050	125	2.00	1/8 NPT	16.66	250203
850-M	16,000	2,050	125	2.00	1/8 NPT	16.66	250203-M

ALSO AVAILABLE	
With Viton Seals	Model 850-HT
Switch Options	Pages 13.1–13.4
See accessories beginning on pages 9.1 and 13.1.	
Available upon request, as are a number of other modifications	

Largest of the straight-line actions, this model has a full 1" diameter plunger that extends 2" and goes into a mechanical lock. A 3/8" thick steel base provides rigidity and can be welded or bolted in position. Snap ring construction permits easy removal of the plunger without disassembling the entire unit. End of plunger accommodates any 5/8-11 spindle assembly (not supplied).

Magnetic Ring Now A Standard Feature

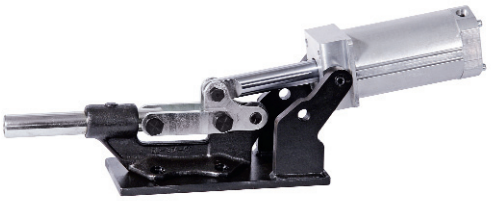

Model **850**

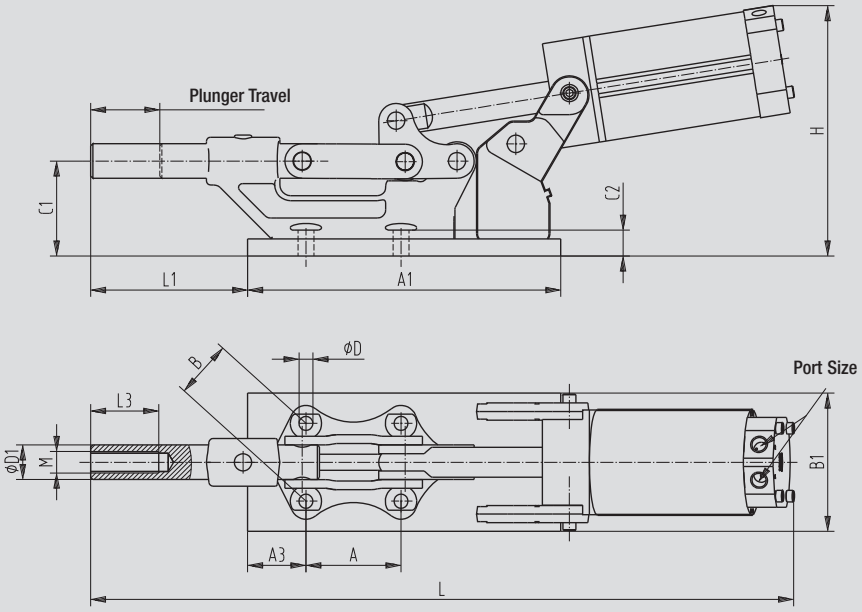

Model no.	A	A1	A3	B	B1	C1	C2	øD	øD1	H	L	L1	L3	M
850	2.75	9.05	1.69	2.25	4.00	2.63	0.38	0.41	0.99	7.15	20.94	4.54	2.00	5/8-11
850-M	2.75	9.05	1.69	2.25	4.00	2.63	0.38	0.41	0.99	7.15	20.94	4.54	2.00	M16

Model no.	EDP no.	Cylinder Bore	Cylinder Area	Maximum Inlet Pressure at Max MA	Max. Mechanical Advantage (MA) at Spindle Loc. A	Max. Mechanical Advantage (MA) at Spindle Loc. B	Exerting Force at 80 PSIG Spindle Loc. B	Exerting Force at 80 PSIG Spindle Loc. A
802-U	58020	1.13	0.994 sq. in.	40 PSIG	5:1	2:1	160 lbs.	200 lbs.
807-S	58071	1.13	0.994 sq. in.	80 PSIG	6:1	2:1	150 lbs.	500 lbs.
807-U	58070	1.13	0.994 sq. in.	550 PSIG	6:1	3:1	150 lbs.	350 lbs.
810-S	58101	1.50	1.767 sq. in.	80 PSIG	5:1	2.9:1	400 lbs.	700 lbs.
810-U	58100	1.50	1.767 sq. in.	70 PSIG	5:1	2.9:1	400 lbs.	600 lbs.
812-U	58120	0.75	0.441 sq. in.	80 PSIG	3.8:1	2.7:1	98 lbs.	135 lbs.
846	58460	1.50	1.767 sq. in.	125 PSIG	5.6:1	3.5:1	500 lbs.	750 lbs.
847-S	58471	2.00	3.141 sq. in.	80 PSIG	4:1	1.8:1	450 lbs.	1,000 lbs.
847-U	58470	2.00	3.141 sq. in.	60 PSIG	4:1	1.8:1	450 lbs.	750 lbs.
849	58490	2.50	4.903 sq. in.	125 PSIG	2.4:1	2.0:1	1,000 lbs.	1,200 lbs.
858	58580	2.50	4.903 sq. in.	200 PSIG	4:1	2.3:1	900 lbs.	1,600 lbs.
8021	58025	1.13	0.881 sq. in.	175 PSIG	2.2:1	1.3:1	100 lbs.	1,750 lbs.
8071	58080	1.50	1.654 sq. in.	105 PSIG	4.2:1	2.4:1	250 lbs.	450 lbs.
8101	58105	2.00	2.830 sq. in.	110 PSIG	2.0:1	1.1:1	275 lbs.	500 lbs.

Model no.	EDP no.	Cylinder Bore	Cylinder Area	Maximum Inlet Pressure	Max. Mechanical Advantage (MA) at Spindle Loc. A	Max. Mechanical Advantage (MA) at Spindle Loc. B	Exerting Force at 80 PSIG
817-S	58171	1.13	0.994 sq. in.	100 PSIG	4:1	2.5:1	200/400 lbs.
817-U	58170	1.13	0.994 sq. in.	80 PSIG	4:1	2.5:1	200/320 lbs.
827-S	58271	1.50	1.767 sq. in.	110 PSIG	3.5:1	2:1	300/500 lbs.
827-U	58270	1.50	1.767 sq. in.	95 PSIG	3.5:1	2:1	300/500 lbs.
868	58680	2.50	4.903 sq. in.	200 PSIG	4:1	2.3:1	900/1,600 lbs.

Model no.	EDP no.	Cylinder Bore	Cylinder Area	Maximum Inlet Pressure	Max. Mechanical Advantage (MA) at	Exerting Force at 80 PSIG
803	58030	1.13	0.994 sq. in.	80 PSIG	7.5:1	600 lbs.
816	58160	0.75	0.441 sq. in.	60 PSIG	5.5:1	190 lbs.
830	58300	1.50	1.767 sq. in.	145 PSIG	5.7:1	800 lbs.
850	58500	2.50	4.903 sq. in.	125 PSIG	5.2:1	2,050 lbs.
8031	58301	1.12	0.994 sq. in.	80 PSIG	7.5:1	600 lbs.

*All power clamps may also be used with hydraulic oil as the pressure medium, but in no case should the inlet pressure be high enough to create an exerting force that exceeds the clamp's maximum holding capacity.

Formula For Calculating Maximum Allowable Inlet Pressure

$$\text{Maximum Line Pressure} = \frac{\text{Holding Capacity}}{\text{Cylinder Area x Mechanical Advantage}}$$

Formula For Calculating Exerting Force
Exerting Force = Inlet Pressure x MA x Cylinder Area

Example For Model 830:
Holding Capacity = 2500 lbs.
Inlet Pressure = 80 PSIG
Cylinder Area = 1.767 in.^{2}
MA = 5.7:1

$$\text{Maximum Line Pressure} = \frac{2500 \text{ lbs.}}{1.767 \text{ in.}^2 \times 9.8} = 248 \text{ PSIG}$$

Exerting Force = 80 PSIG x 1.767 in.^{2} x 5.7 = 806 lbs.

Spindle position to determine mechanical advantage.

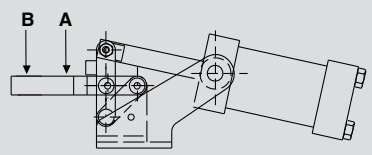

Models 800, 1200

Even the smallest shop can now have rapid power clamping. The DE-STA-CO Low Profile Pneumatic Retractor Clamp operates on ordinary shop line air (properly filtered and lubricated). The clamp arm completely retracts from the work area, for ease in part loading and unloading. The resulting increase in productivity can also reduce your labor costs.

Compact size and low profile for mounting in restricted areas.
Uniform clamping force throughout full stroke.
Variable clamping force allowed by regulating input pressure.
Requires no auxiliary power source.
Operates in any position or mounting angle.
Clamping capacities to 1,600 lbs. (at 150 PSIG).
Both models available with extended arm, as Models 800-E and 1200-E.

Here's how it works:

1. Clamp arm retracts fully for loading and unloading ease.
2. Clamp arm moves straight forward
3. Clamp arm pivots down to hold workpiece firmly in position.
4. Use Model 930 or 940 valve and plug one end port on each side to operate as a three way valve.

Model 800

Model 800-E

ALSO AVAILABLE

See accessories beginning on pages 9.1 and 13.1.

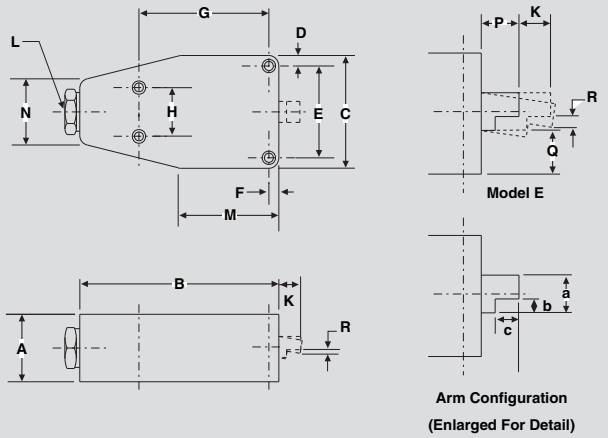

Clamping Arm Configuration		
a	b	c
0.50	0.19	0.31

Model no.	Input Pressure [PSI]	Exerting Force Range
800	70-150 PSI	850-1500
800-E	70-150 PSI	650-1200
1200	70-150 PSI	750-1600
1200-E	70-150 PSI	550-1200
Minimum Operating Pressure 70 PSIG		

Model no.	EDP no.	Weight	A	B	C	D	E	F	G	H	K	L	M	N	P	Q	Clamping Range R	Mtg. Holes
800	58000	2.50 lbs.	1.63	4.81	2.72	0.25	2.21	0.25	3.13	1.19	0.50	1/4 NPT	2.31	1.50	–	0.59	0.09	0.26
800-E	58001	2.50 lbs.	1.63	4.81	2.72	0.25	2.21	0.25	3.13	1.19	0.50	1/4 NPT	2.31	1.50	0.50	0.59	0.16	0.26
1200	51200	4.00 lbs.	2.25	6.00	3.00	0.28	2.44	0.28	4.25	1.50	1.00	1/4 NPT	3.00	1.38	–	0.63	0.25	0.26
1200-E	51201	4.00 lbs.	2.25	6.00	3.00	0.28	2.44	0.28	4.25	1.50	1.00	1/4 NPT	3.00	1.38	0.69	0.63	0.38	0.26

Note: For use with pneumatic power only. 3-way air valve required to power unit (single-acting, spring return).

This clamp is the newest in our line of pneumatic retracting clamps. The unit is completely enclosed, making it useful in heavy machining applications. Its low and narrow profile allows it to be fit into tight, confined areas. The clamping arm action extends out horizontally, and then clamps down. The double-acting cylinder has built in restriction to help control the speed of the cylinder.

ALSO AVAILABLE	
With Magnetic Ring	Model 801-MR
Switch Options	Pages 13.1–13.4
See accessories beginning on pages 9.1 and 13.1.	

58010
Model 801

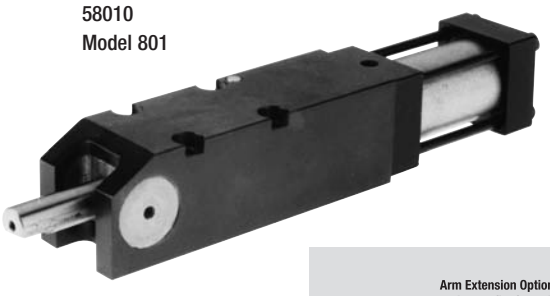

Arm Extension Option
For High Profile Clamping

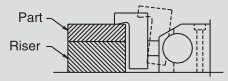

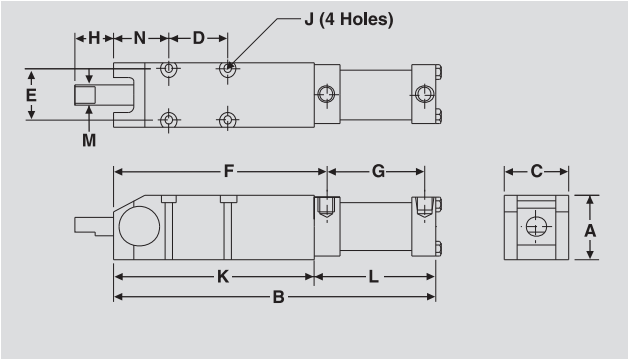

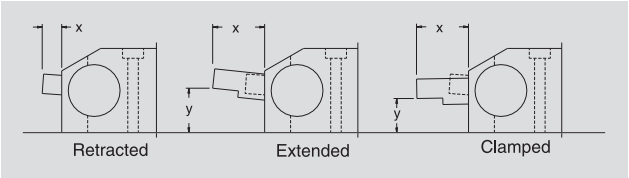

Model 801010
(Arm Extension Option)

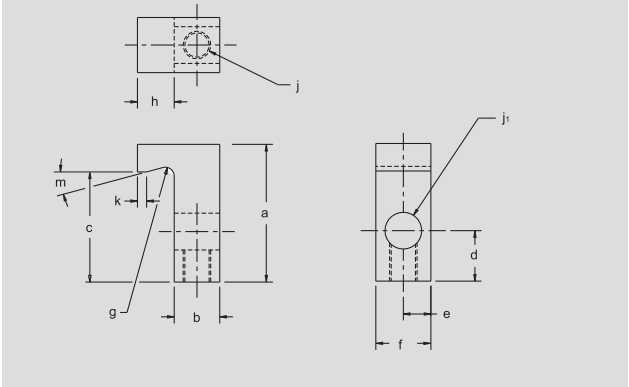

Clamping Arm Configuration		
	x	y
Retracted	0.38	–
Extended	1.00	0.85
Clamped	1.00	0.65

Clamp Assembly with 1.12 Dia. Cylinder		
Air/ PSI	Standard Arm	Extended Arm
40	45 lbs.	38 lbs.
50	67 lbs.	57 lbs.
60	98 lbs.	77 lbs.
70	125 lbs.	94 lbs.
80	164 lbs.	114 lbs.
90	192 lbs.	129 lbs.
100	216 lbs.	147 lbs.
110	238 lbs.	165 lbs.

Arm Extension & Set Screw																
Model no.	EDP no.	a	b	c	d	e	f	g	h	j Dia.	j_1 Dia.	k	m			
801010	58119	1.87	0.62	1.5	0.69	0.38	0.75	0.12	0.50	3/8-24	0.501	0.12	15º			

Model no.	EDP no.	A	B	C	D	E	F	G	H	J	K	L	M	N	Port Size
801	58010	1.62	8.42	1.62	1.50	1.32	5.37	2.84	1.00	#10	5.06	3.36	0.50	1.38	1/8 NPT

Models 870-2, 871-2

Power clamps with the roller and cam principle

Model no.	Maximum Holding Capacity [lbs.]	Exerting Force @ 80 PSI	Max. Operating Pressure [PSI]	Clamping range at end of arm in fully closed position	Cylinder Area	Mechanical advantage	Weight	Port Size
870-2	2,000	170 / 350	250	0.18	1.767 sq. in.	1.2 to 2.5.1	7.00	1/4 NPT
871-2	2,000	170 / 350	250	0.14	1.767 sq. in.	1.2 to 2.5.1	7.00	1/4 NPT

ALSO AVAILABLE	
Switch Options	Pages 13.1–13.4
See accessories beginning on page 13.1.	

These models use a roller and cam principle and provide the following benefits:

Able to clamp work of inconsistent thickness and still maintain a locked condition.
Modular units 2-1/8" square can stack together for minimum distance between clamping points.
Four-way mounting surface for full mounting flexibility.
Built-in pre-stop eliminates need to bottom out cylinder. Gives extra travel to automatically compensate for wear. Also permits arm to be machined accurately relative to mounting surface.
Clamp arms can be altered by welding, drilling, or machining to suit the application.
Standard mounting plate included.

Application Note: Clamping range at end of arm in fully closed position:
Model 870-2 – 0.18"
Model 871-2 – 0.14"

Magnetic Ring Now A Standard Feature

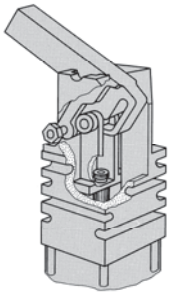

Roller and cam mechanism of the Models 870-2 and 871-2

Standard equipment:
1 assembly plate, part no. 870116
2 flow restrictor fittings

Model 870 -2
(clamping arm **vertical** when in clamped position)

Model 871-2
(clamping arm **horizontal** when in clamped position)

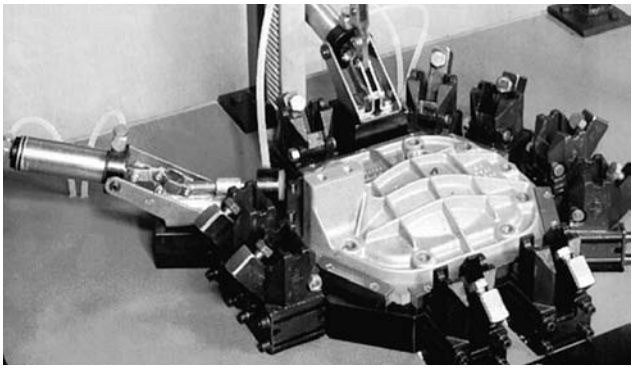

Power clamp models 871-2 and 803 on a pressure test fixture for vehicle gearbox lids

Sensors

Order separately:
sensors **for -MR versions**
(2 pieces required to sense both the open and closed positions of the cylinder)

Power clamps with the roller and cam principle

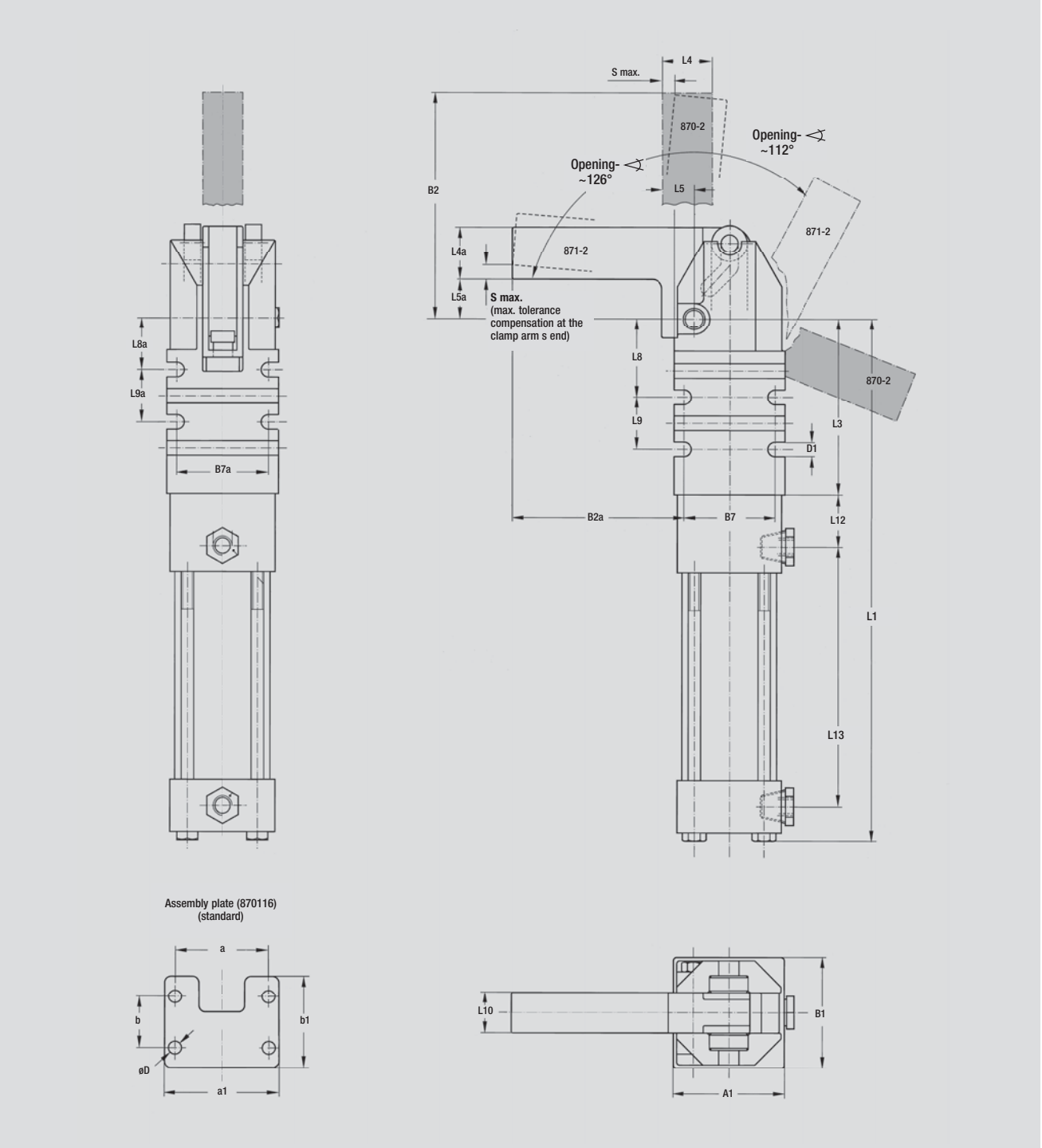

Model no.	a	a1	A1	b	b1	B1	B2	B2a	B7	B7a	øD	D1	L1	L3	L4	L4a	L5	L5a	L8	L8a	L9	L9a	L10	L12	L13
870-2	1.75	2.19	2.13	1.00	1.75	2.13	4.25	–	1.75	1.75	0.25	0.28	9.58	3.38	1.00	–	0.62	–	1.50	1.00	1.00	1.00	0.78	1.00	4.50
871-2	1.75	2.19	2.13	1.00	1.75	2.13	–	3.31	1.75	1.75	0.25	0.28	9.96	3.38	–	1.00	–	0.76	1.50	1.00	1.00	1.00	0.78	1.00	4.88

Notes

NEW

035 Series

page 12.4

NEW

89R Series

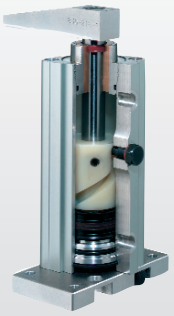

page 12.16

NEW

9500 Series

page 12.22

Product group – pneumatic swing clamps

Model Series no.	Model no.			Page
	035-125-145 035-125-160 035-125-190 035-125-245 035-125-260 035-125-290 035-125-300			12.5
	035-225-145 035-225-160 035-225-190 035-225-245 035-225-260 035-225-290 035-225-300			12.5
	035-132-145 035-132-160 035-132-190 035-132-245 035-132-260 035-132-290 035-132-300			12.6
	035-232-145 035-232-160 035-232-190 035-232-245 035-232-260 035-232-290 035-232-300			12.6
	035-140-145 035-140-160 035-140-190 035-140-245 035-140-260 035-140-290 035-140-300			12.7
	035-240-145 035-240-160 035-240-190 035-240-245 035-240-260 035-240-290 035-240-300			12.7
	035-150-145 035-150-160 035-150-190 035-150-245 035-150-260 035-150-290 035-150-300			12.8
	035-250-145 035-250-160 035-250-190 035-250-245 035-250-260 035-250-290 035-250-300			12.8

Model Series no.	Model no.			Page
8000 	8015 8016 8015-LA 8016-LA			12.14
8100 	8115 8116 8115-LA 8116-LA			
8200 	8215 8216 8215-LA 8216-LA			
8300 	8315 8316 8315-LA 8316-LA			
8400 	8415 8416 8415-LA 8416-LA			
89R 	89R20-010-1 89R32-010-1 89R40-010-1 89R40-025-1 89R50-025-1 89R63-025-1			12.16
8JG 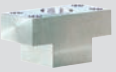	8MA-084-1 8MA-085-1 8MA-086-1 8MA-087-1 8MA-088-1 8MA-089-1	89R20-010-1 89R32-010-1 89R40-010-1 89R40-025-1 89R50-025-1 89R63-025-1	Blank Arm	12.18
8MA 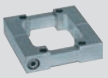	8MA-092-1 8MA-094-1 8MA-095-1 8MA-095-1 8MA-096-1 8MA-097-1	89R20-010-1 89R32-010-1 89R40-010-1 89R40-025-1 89R50-025-1 89R63-025-1	Body Mount Flange	12.18

Note: See pages 12.6 & 9.1 for accessories

Model Series no.	Model no.	Used on		Page
8JG 	8JG-215-1 8JG-217-1 8JG-218-1 8JG-218-1 8JG-219-1 8JG-220-1	89R20-010-1 89R32-010-1 89R40-010-1 89R40-025-1 89R50-025-1 89R63-025-1	Standard Clamp Arm	12.19
8MA 	8MA-061-1 8MA-063-1 8MA-064-1 8MA-064-1 8MA-065-1 8MA-066-1	89R20-010-1 89R32-010-1 89R40-010-1 89R40-025-1 89R50-025-1 89R63-025-1	End Mount Flange	12.19
SME 	SME-3-LED SME-3-LED SME-3-LED SME-3-LED SME-3-LED SME-3-LED	89R20-010-1 89R32-010-1 89R40-010-1 89R40-025-1 89R50-025-1 89R63-025-1	Magnetic Sensors	12.20
8MA 	8MA-018-1 8MA-020-1 8MA-021-1 8MA-021-1 8MA-022-1 8MA-023-1	89R20-010-1 89R32-010-1 89R40-010-1 89R40-025-1 89R50-025-1 89R63-025-1	Mounting Feet	12.20
	9530 9540			12.22

Pneumatic Clamps

NEW

StrongHold *SELECT*

035-163-190

035-125-190

035-250-290

035-225-190

Pneumatic Swing/Pull Clamps are for applications that require a lighter touch than the forces generated by hydraulic powered clamps.

DE-STA-CO's line of pneumatic swing/pull clamps are fast acting and can generate from 50 up to 430 lbs. of clamping force from shop air.

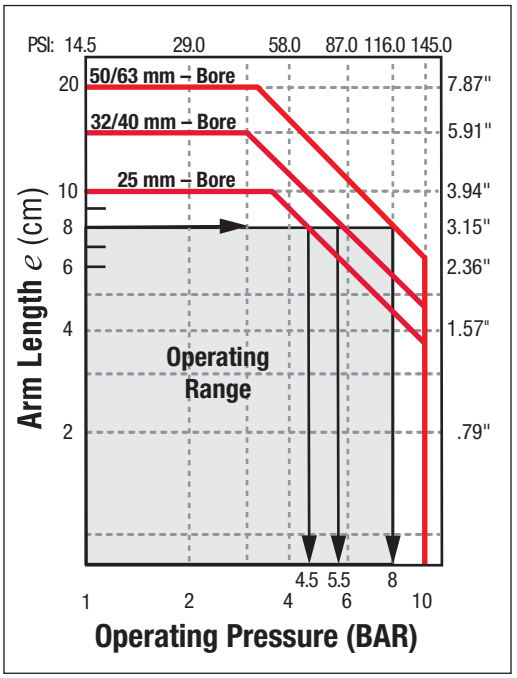

Allowable Bending Moment

Use the arm length and operating pressure within this graph for allowable bending moment loaded piston rod.

When arm length is 8 cm (3.15"), pressure should be less than:

25 mm Bore: 4.5 BAR (65 PSI)
32/40 mm Bore: 5.5 BAR (80 PSI)
50/63 mm Bore: 8 BAR (116 PSI)

See Page 12.10 – Calculation for Moment of Inertia

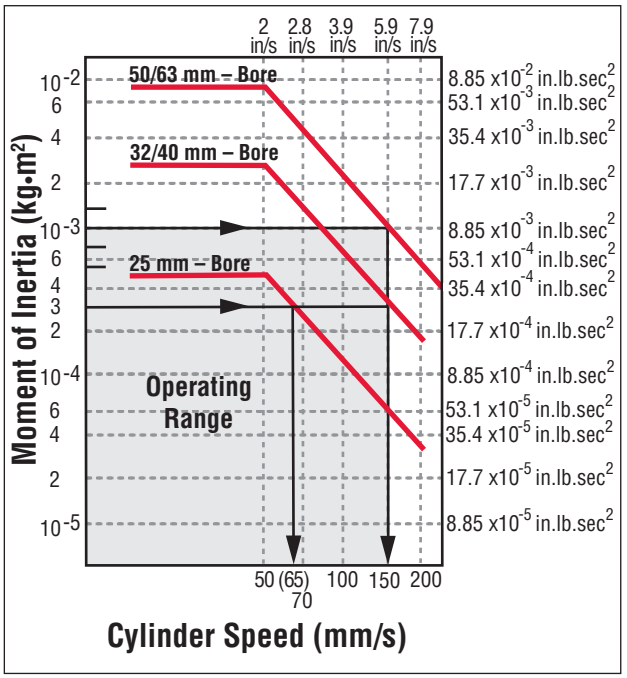

Mass Moment of Inertia

When the arm is long and heavy, damage of internal parts may be caused due to inertia. Use the inertia moment and cylinder speed within this graph based on arm requirements.

When arm's inertia is 3 X 10^{-4} kg•m^2 (2.7 X 10^{-3} in-lb•sec^2) cylinder speed should be less than:

25 mm Bore: 65 mm/s (2.6 in/s)
32/40 mm Bore: 150 mm/s (5.9 in/s)
When arm's inertia is 1 X 10^{-3} kg•m^2 (8.85 X 10^{-3} in-lb•sec^2) cylinder speed should be less than 50/63 mm Bore: 150 mm/s (5.9 in/s)

Swing Clamp Order Information

035 - **125** - **190**

- 035: Family
- 125: Style; Bore Size (mm)
- 190: Swing Direction; Swing Angle

Style	Bore Size	Swing Direction	Swing Angle
1 – Threaded Body 2 – Bottom Flange	25 mm 32 mm 40 mm 50 mm 63 mm	1 – Right 2 – Left	90°

NEW

Pneumatic Swing/Pull Clamp – 25mm Bore

Max. Operating Pressure: 100 PSI
Clamping Annulus Area: .522 in^2
Normal Operating Pressure: 40 – 80 PSI
Cylinder Operating: Double-acting

DE-STA-CO's line of Pneumatic Swing/Pull Clamps is designed for applications not requiring hydraulic power. The fast acting DE-STA-CO clamp can generate up to 50 lbs. of clamping force from shop air. DE-STA-CO pneumatic clamps are ideal for a wide variety of manufacturing and assembly operations.

Features:

- Swing motion available in 90 degrees
- Four (4) styles of arms
- Double-locked arm design is bolted to piston shaft and around shaft diameter for extra rigidity
- Double-acting design
- Dual-seal design with a wiper seal to keep contaminants out
- Long clamping stroke accommodates a wide thickness of materials
- Clamping force is adjustable using regulated air
- Smooth swing motion for better operating performance

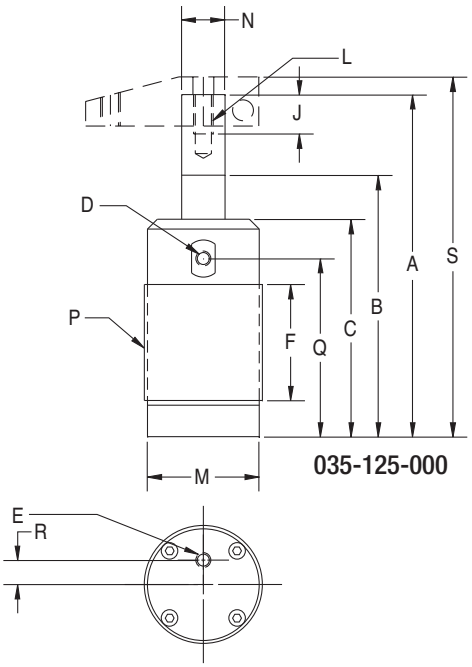

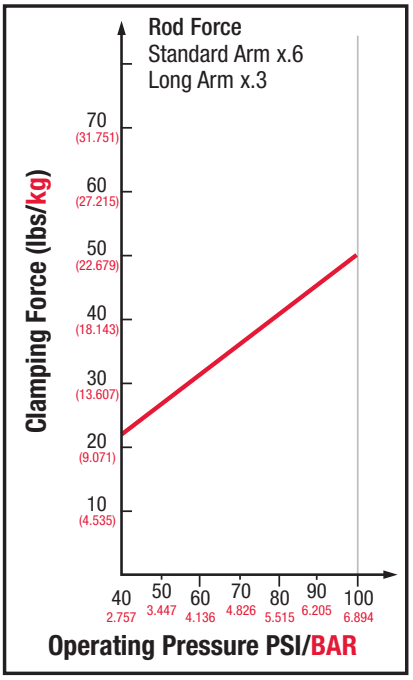

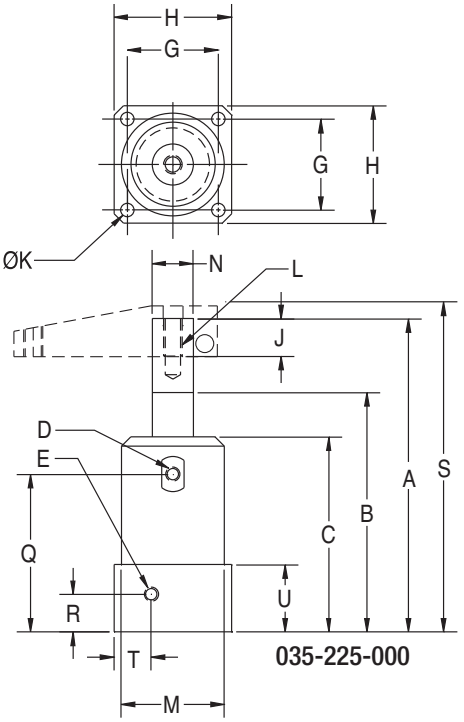

Cat. no.	Imperial Dimensions (inches)																		
	Total Stroke	Clamping Stroke	A Unclamped Position	B Clamped Position	C Body Height	D Clamp Port	E Unclamp Port	F Threaded Body	G Flange Mount	H Flange	J Thread Depth	øK Hole Dia.	L Thread Size	M Body Dia.	N Shaft Dia.	P Thread Size	Q	R	S
035-125-190 035-125-290	1.036	0.531	4.36	3.324	2.76	10-32 UNF	10-32 UNK	1.5	–	–	0.665	–	1/4-20 UNC	1.418	0.551	1½-16 UN	2.25	0.35	4.575
035-225-190 035-225-290	1.051	0.511	4.23	3.215	2.62			–	1.22	1.577		1.75		1.377		–	2.1	0.5	4.435

See page 12.9 for available arms

Pneumatic Swing/Pull Clamp – 32mm Bore

NEW

StrongHold *SELECT*

Max. Operating Pressure: 100 PSI
Clamping Annulus Area: .935 in^2
Normal Operating Pressure: 40 – 80 PSI
Cylinder Operating: Double-acting

DE-STA-CO's line of *Pneumatic Swing/Pull Clamps* is designed for applications not requiring hydraulic power. The fast acting DE-STA-CO clamp can generate up to 90 lbs. of clamping force from shop air. DE-STA-CO pneumatic clamps are ideal for a wide variety of manufacturing and assembly operations.

Features:

- Swing motion available in 90 degrees
- Four (4) styles of arms
- Double-locked arm design is bolted to piston shaft and around shaft diameter for extra rigidity
- Double-acting design
- Dual-seal design with a wiper seal to keep contaminants out
- Long clamping stroke accommodates a wide thickness of materials
- Clamping force is adjustable using regulated air
- Smooth swing motion for better operating performance

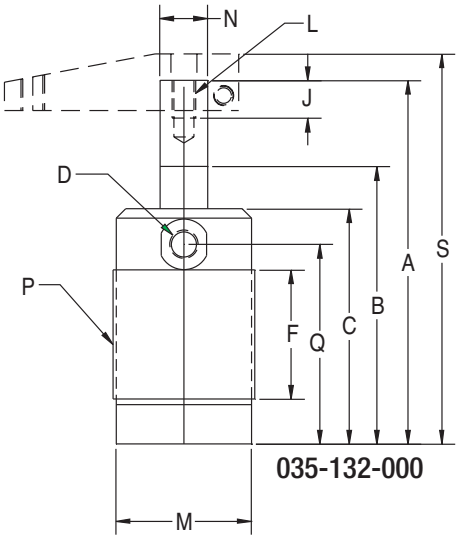

035-132-000

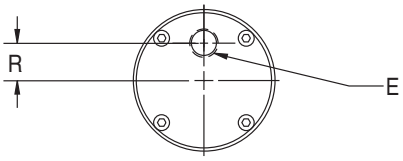

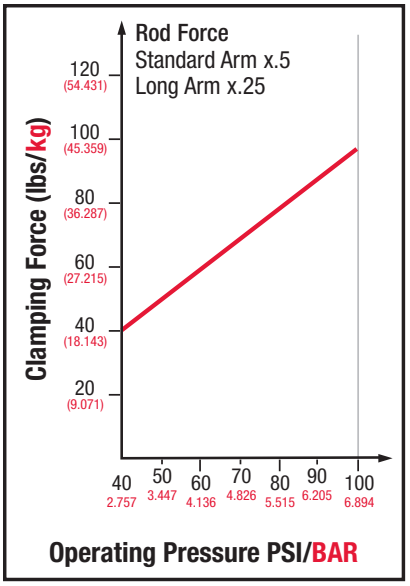

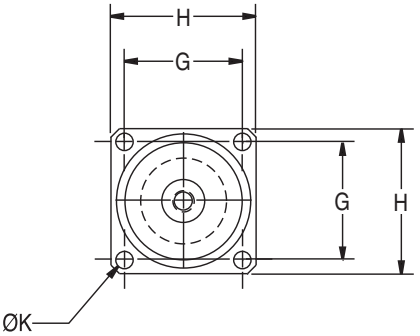

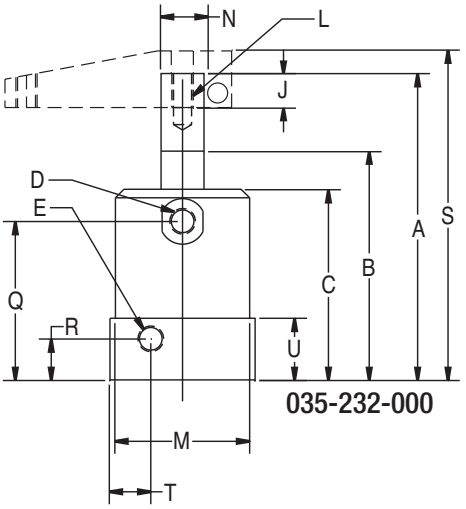

035-232-000

Cat. no.	Imperial Dimensions (inches)																				
	Total Stroke	Clamping Stroke	A Unclamped Position	B Clamped Position	C Body Height	D Clamp Port	E Unclamp Port	F Threaded Body	G Flange Mount	H Flange	J Thread Depth	øK Hole Dia.	L Thread Size	M Body Dia.	N Shaft Dia.	P Thread Size	Q	R	S	T	U
035-132-190 035-132-290	1.132	0.565	5.00	3.868	3.115	1/8 NPT	1/8 NPT	1.72	–	–	0.575	–	5/16-18 UNC	1.788	0.630	1⅛-16 UN	2.625	0.45	5.165	–	–
035-232-190 035-232-290	1.055	0.488	4.707	3.652	2.8			–	1.732	2.13		0.253		1.97		–	2.325	0.57	4.85	0.57	0.907

See page 12.9 for available arms

NEW

Pneumatic Swing/Pull Clamp – 40mm Bore

Max. Operating Pressure: 100 PSI
Clamping Annulus Area: 1.636 in^2
Normal Operating Pressure: 40 – 80 PSI
Cylinder Operating: Double-acting

DE-STA-CO's line of *Pneumatic Swing/Pull Clamps* is designed for applications not requiring hydraulic power. The fast acting DE-STA-CO clamp can generate up to 160 lbs. of clamping force from shop air. DE-STA-CO pneumatic clamps are ideal for a wide variety of manufacturing and assembly operations.

Features:

- Swing motion available in 90 degrees
- Four (4) styles of arms
- Double-locked arm design is bolted to piston shaft and around shaft diameter for extra rigidity
- Double-acting design
- Dual-seal design with a wiper seal to keep contaminants out
- Long clamping stroke accommodates a wide thickness of materials
- Clamping force is adjustable using regulated air
- Smooth swing motion for better operating performance

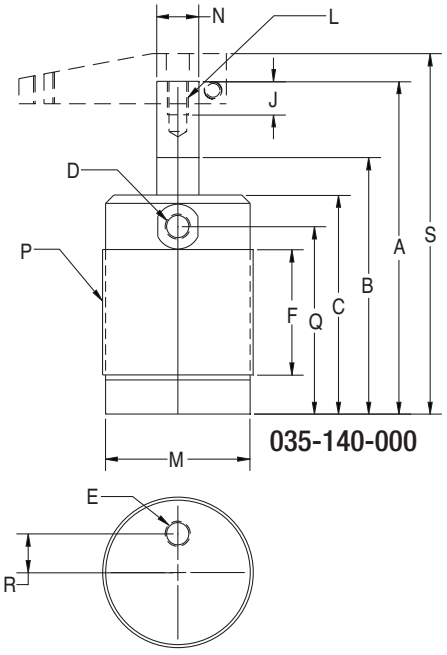

035-140-000

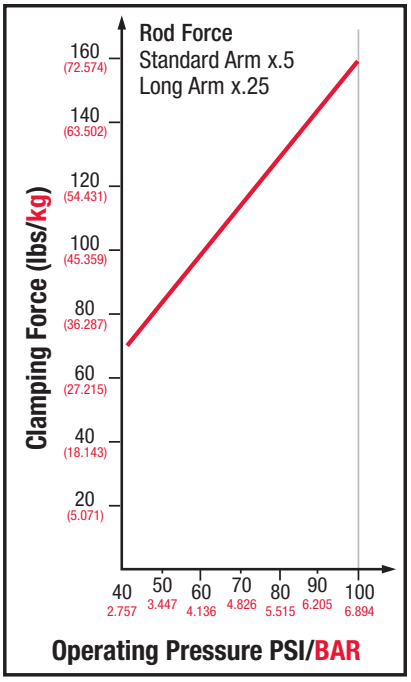

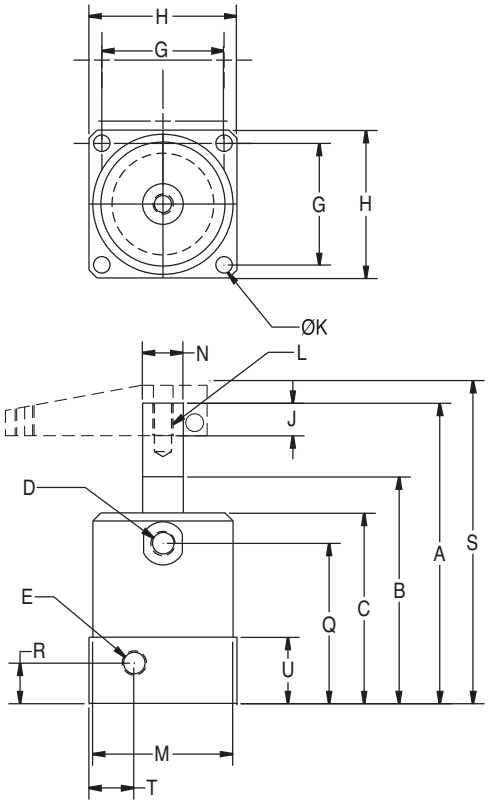

Cat. no.	Imperial Dimensions (inches)																			
	Total Stroke	Clamping Stroke	A Unclamped Position	B Clamped Position	C Body Height	D Clamp Port	E Unclamp Port	F Threaded Body	G Flange Mount	H Flange	J Thread Depth	øK Hole Dia.	L Thread Size	M Body Dia.	N Shaft Dia.	P Thread Size	Q	R	S	T	U
035-140-190 035-140-290	1.197	0.630	5.37	4.04	3.275	1/8 NPT	1/8 NPT	1.879	–	–	0.7	–	5/16-18 UNC	2.16	0.630	2¼-16 UN	2.8	0.625	5.39	–	–
035-240-190 035-240-290	1.091	0.524	4.981	3.89	2.95			–	1.889	2.29		0.253		2.16		–	2.5	0.65	5.00	0.65	1.027

See page 12.9 for available arms

Pneumatic Swing/Pull Clamp – 50mm Bore

NEW

StrongHold *SELECT*

Max. Operating Pressure: 100 PSI
Clamping Annulus Area: 2.556 in^2
Normal Operating Pressure: 40 – 80 PSI
Cylinder Operating: Double-acting

DE-STA-CO's line of *Pneumatic Swing/Pull Clamps* is designed for applications not requiring hydraulic power. The fast acting DE-STA-CO clamp can generate up to 250 lbs. of clamping force from shop air. DE-STA-CO pneumatic clamps are ideal for a wide variety of manufacturing and assembly operations.

Features:

- Swing motion available in 90 degrees
- Four (4) styles of arms
- Double-locked arm design is bolted to piston shaft and around shaft diameter for extra rigidity
- Double-acting design
- Dual-seal design with a wiper seal to keep contaminants out
- Long clamping stroke accommodates a wide thickness of materials
- Clamping force is adjustable using regulated air
- Smooth swing motion for better operating performance

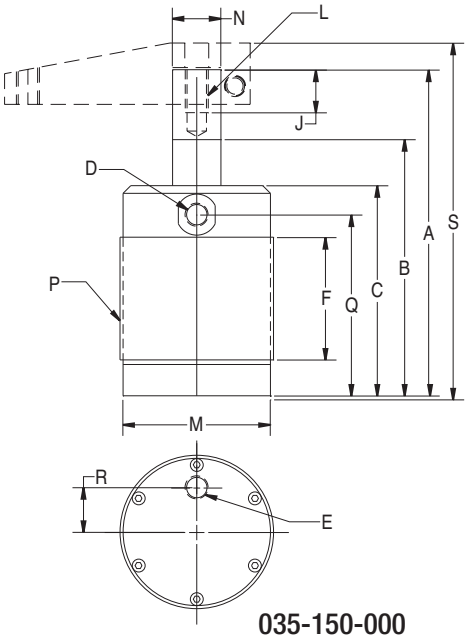

035-150-000

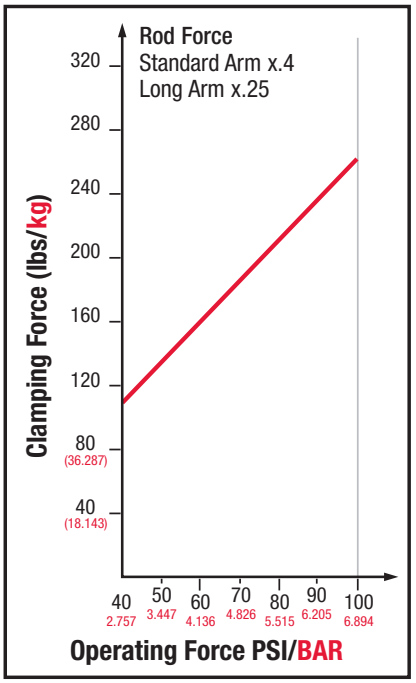

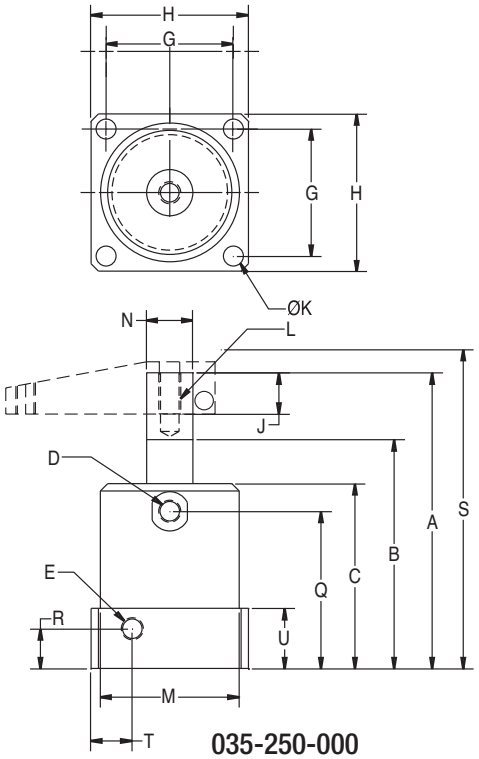

035-250-000

Cat. no.	Imperial Dimensions (inches)																			
	Total Stroke	Clamping Stroke	A Unclamped Position	B Clamped Position	C Body Height	D Clamp Port	E Unclamp Port	F Threaded Body	G Flange Mount	H Flange	J Thread Depth	øK Hole Dia.	L Thread Size	M Body Dia.	N Shaft Dia.	P Thread Size	Q	R	S	T	U
035-150-190 035-150-290	1.181	0.553	5.36	4.179	3.475	1/8 NPT	1/8 NPT	2.0	–	–	1.0	–	3/8-16 UNC	2.4	0.787	2½-16 UN	2.95	0.7	5.75	–	–
035-250-190 035-250-290	1.134	0.506	5.061	3.927	3.15			–	2.165	2.68		0.337		2.365		–	2.7	0.65	5.44	0.65	1.025

See page 12.9 for available arms

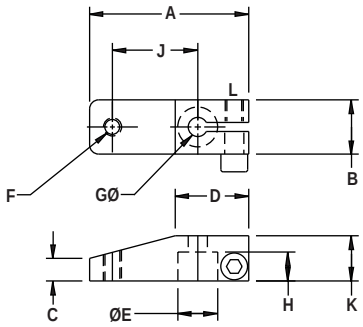

Standard Arm

036-000-01

Part no.	A	B	C	D	E	F	G	H	J	K	L
036-551-01	2.380	0.750	0.313	1.016	0.551	¼-20 UNC	0.265	0.400	1.361	0.625	¼-20 UNC-2B
036-630-01	3.100	0.750	0.375	1.105	0.630	5⁄16-18 UNC	0.344	0.500	2.000	0.750	5⁄16-18 UNC-2B
036-787-01	4.000	1.000	0.500	1.307	0.787	⅜-16 UNC	0.390	0.700	2.750	1.000	⅜-16 UNC-2B

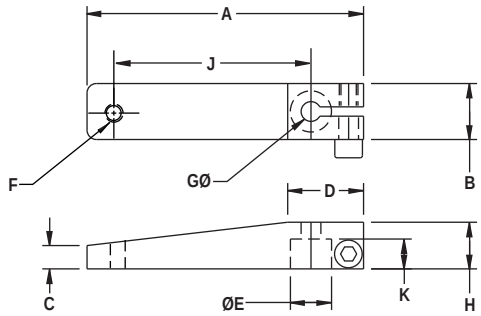

Extended Arm

036-000-02

Part no.	A	B	C	D	E	F	G	H	J	K
036-551-02	3.380	0.750	0.313	1.016	0.551	¼-20 UNC	0.265	0.625	2.361	0.400
036-630-02	4.725	0.750	0.375	1.105	0.630	5⁄16-18 UNC	0.344	0.750	3.625	0.500
036-787-02	6.360	1.000	0.500	1.307	0.787	⅜-16 UNC	0.390	1.000	5.000	0.700

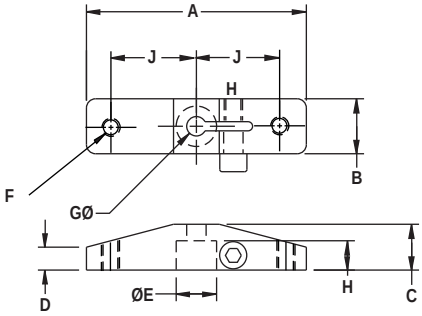

Dual Stationary Arm

036-000-04

Part no.	A	B	C	D	E	F	G	H	J
036-551-04	3.28	0.750	0.625	0.313	0.551	¼-20 UNC	0.265	0.400	1.36
036-630-04	4.72	0.750	0.750	0.375	0.630	5⁄16-18 UNC	0.344	0.500	2.00
036-787-04	6.00	1.000	1.000	0.500	0.787	⅜-16 UNC	0.390	0.700	2.75

Flat-Tip Bonded Neoprene Cap Spindle

Part no.	L	L_1	D	Thread (G)
202208	1.63	1.13	0.66	1/4-20
215208	2.13	1.63	0.66	1/4-20
225208	2.25	1.56	0.75	5/16-18
507208	3.00	2.25	0.75	5/16-18
240208	3.25	2.25	0.88	3/8-16
527208	3.50	2.50	0.88	3/8-16
235208	5.75	4.75	0.88	3/8-16

Hex-Head Fully Threaded Carbon Steel Spindle

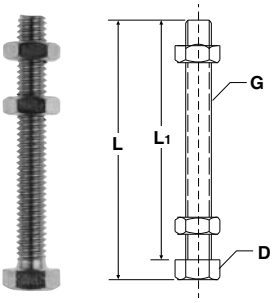

Part no.	L	L_1	D	Thread (G)
202203	3.13	3.00	7/16	1/4-20
205203	1.88	1.69	7/16	1/4-20
461203	1.00	0.81	1/2	5/16-18
441203	1.94	1.75	1/2	5/16-18
207203	2.75	2.50	1/2	5/16-18
491203	1.50	1.25	9/16	3/8-16
210203	3.00	2.75	9/16	3/8-16
240203	4.25	4.00	9/16	3/8-16
527203	5.25	5.00	9/16	3/8-16

Pneumatic Clamp Jam Nut

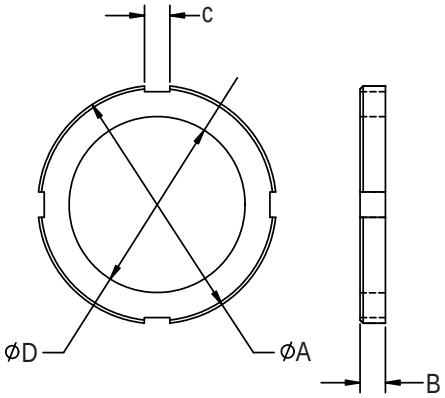

Part no.	Clamp Used On	Dim A	Dim B	Dim C	Dim D
051-150-160	035-125-XXX	2.000	0.38	0.275	1-1/2-16 UN
051-187-160	035-132-XXX	2.625	0.38	0.312	1-7/8-16 UN
051-225-160	035-140-XXX	3.000	0.50	0.312	2-1/4-16 UN
051-250-160	035-150-XXX	3.250	0.50	0.312	2-1/2-16 UN
051-312-160	035-163-XXX	3.875	0.50	0.375	3-1/8-16 UN

Calculation for Mass Moment of Inertia

I: Mass Moment of Inertia (kg • m2)(lb-in-sec²) m: Load Mass (kg)($\frac{\text{lb-sec}^2}{\text{in}}$)

NOTE: $m = \frac{w(lbf)}{g\ in/sec^2}$ w = weight, g = 386 in/sec²

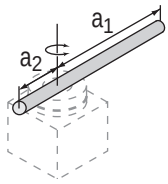

1. Thin Bar

Position of rotary axis: Vertical to the bar and through the end

$$I = m1 \bullet \frac{a1^2}{3} + m2 \bullet \frac{a2^2}{3}$$

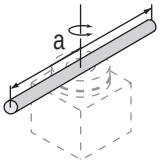

2. Thin Bar

Position of rotary axis: Vertical to the bar and through the center of gravity

$$I = m \bullet \frac{a^2}{12}$$

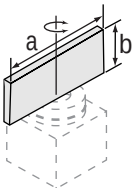

3. Thin Rectangular Plate

Position of rotary axis: Parallel to side b and through center of gravity

$$I = m \bullet \frac{a^2}{12}$$

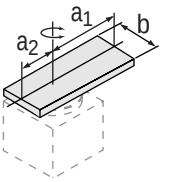

4. Thin Rectangular Plate

Position of rotary axis: Vertical to the plate and through the end

$$I = m1 \bullet \frac{4a1^2+b^2}{12} + m2 \bullet \frac{4a2^2+b^2}{12}$$

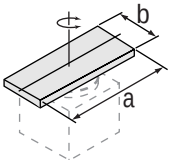

5. Thin Rectangular Plate

Position of rotary axis: Through the center of gravity and vertical to the plate

$$I = m \bullet \frac{a^2+b^2}{12}$$

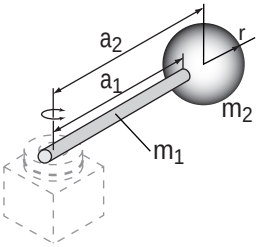

6. Load at the End of Lever Arm

$$I = m1 \bullet \frac{a1^2}{3} + m2 \bullet a2^2 + K$$

$$I = m2 \bullet \frac{2r^2}{5}$$

Quick, Clean & Economical

DE-STA-CO's 8400 Series joins the 8000/8100 and 8200/8300 Series, rounding out a versatile, time-saving line of swing cylinders. Ideal for installations where hydraulic power is not suitable, these pneumatic power clamps from DE-STA-CO have all the same quick-acting advantages and can produce up to 160 lbs. clamping force from shop line air pressure (see chart). These double-acting clamps are red anodized aluminum with either a threaded body that permits three mounting options, or a block-style mounting body.

Intended for quick clamping in secondary manufacturing operations on metallic or non-metallic products. These clamps offer a combination of features that makes them uniquely adaptable to such applications, as welding and assembly operations. Spindles are included.

Every DE-STA-CO pneumatic swing clamp now is equipped with sensing capabilities as a standard feature. See page 12.7 for details.

- 90° swing of clamping arm minimizes obstruction in the workspace and makes loading or unloading of parts easy.
- 1/2" clamping stroke (vertical arm travel) for Series 8200/8300 and 3/8" clamping stroke for Series 8000/8100 allows wide variation in part size. The clamp adjusts automatically on every cycle.
- New Series 8400, designed for mid-range applications, features 1/2" clamping stroke.
- Improved design features additional mounting screws to more effectively secure clamp housing.
- Internal piston design features new seal technology.
- Quick swing-and-clamp movement reduces cycle times in your operation.
- Pneumatic operation is economical and clean, and allows precise control and monitoring of the clamping force.
- Multiple mounting options allow the clamp to be adapted to the fixture for the best use of space and to minimize installation time.
- Clamping force is adjustable across a wide range: 20 lbs. to 160 lbs.
- Clamp exerts just the force your operation requires without deforming delicate parts.
- Broad operating temperature range of -40° F to 250° F allows installations in extreme environments.
- Multiple mounting and arm options allow the clamp to be adapted to the fixture for the best use of space and to minimize installation time.
- Maximum inlet pressure 130 PSIG.

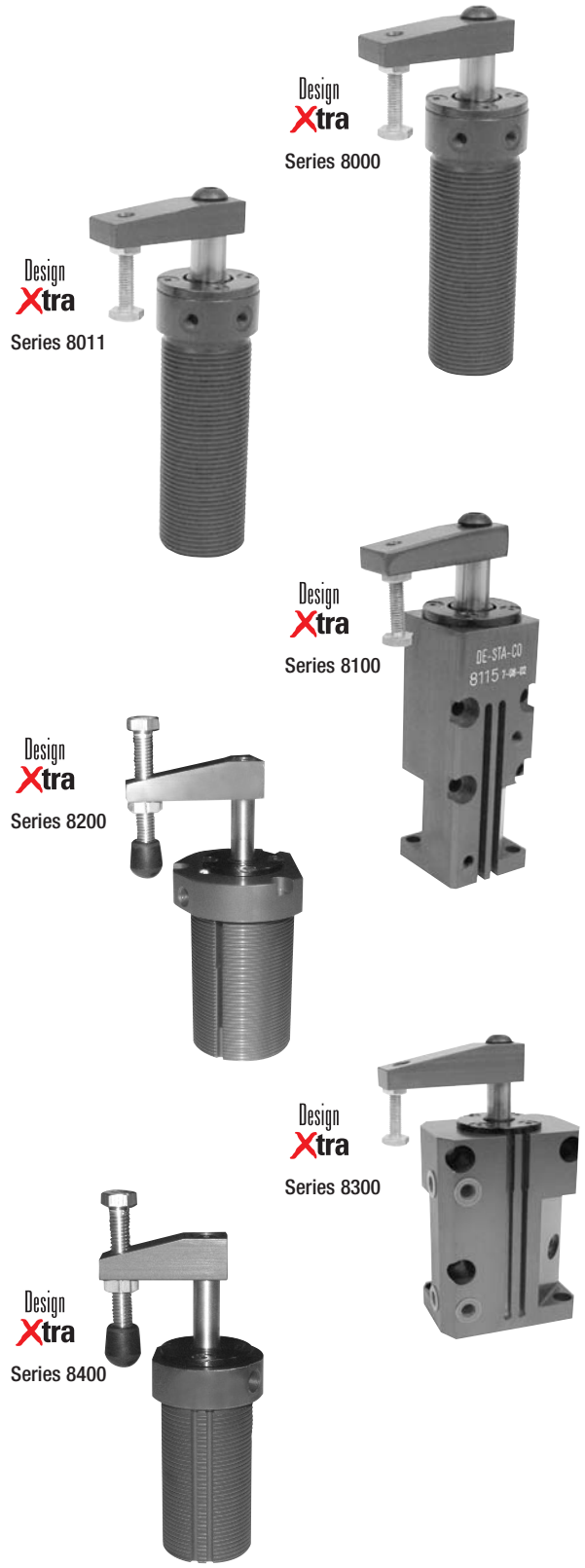

NOTE: See pages 12.15 & 9.1 for accessories

Model Series 8000, 8100, 8200, 8300, 8400

Cylinder Specifications

Series no.	Bore [in.]	Red [in.]	Stroke [in.]	Effective Clamping Area [sq. in.]	Effective Unclamping Area [sq. in.]	Clamp Volume [cu. in.]	Unclamp Volume [cu. in.]
8000	0.750	0.438	0.85	0.291	0.442	0.25	0.38
8100	0.750	0.438	0.85	0.291	0.442	0.25	0.38
8200	1.500	0.500	1.28	1.571	1.767	2.01	2.26
8300	1.500	0.500	1.28	1.571	1.767	2.01	2.26
8400	1.188	0.500	1.28	0.911	1.108	1.17	1.42

Application Note:

When using a T-Arm, the clamping force at each end of the arm is equal if the arm length of each end is equal. (The clamp force at each clamping point = 1/2 rod force)

Force Data (lbs.)

PSI	8000/8100 with Long Arm (801529)	8000/8100 with Standard Arm (801528)	8000/8100 Straight Pull (Rod Force)	8400 with Long Arm (821513)	8400 with Standard Arm (841512)	8400 Straight Pull (Rod Force)	8200/8300 with Long Arm (821513)	8200/8300 with Standard Arm (821512)	8200/8300 Straight Pull (Rod Force)
30	4	8	9	20	25	27	24	27	47
40	5	10	12	29	32	36	34	38	63
50	7	13	15	34	41	46	44	48	79
60	8	16	17	42	47	55	55	57	94
70	10	18	20	49	55	64	65	67	110
80	12	22	23	55	62	73	75	80	126
90	13	25	26	60	68	82	83	89	141
100	15	27	29	65	76	91	93	99	157
110	17	30	32	74	82	100	105	112	173
120	18	32	35	80	91	109	114	121	189
130	20	35	38	87	98	118	124	131	204

Swing Cylinder Rotation: Frame of reference for specifying rotation is the clamp arm viewed from above during the clamping stroke. A right-hand unit rotates clockwise and then clamps down; a left-hand unit rotates counter-clockwise, and then clamps down.

Note: Tolerance on arm swing position is ±3°.

8000, 8200, 8400 Mounting Options

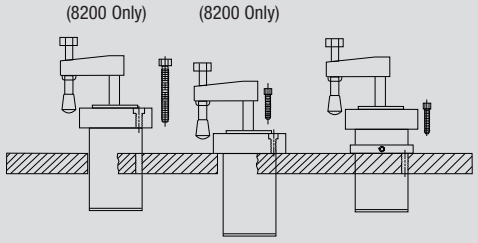

Threaded body in a tapped hole. Position is locked by a single cap screw into a tapped hole in fixture.

Cylinder body passes through a clearance hole.Three mounting screws pass through the top flange into holes tapped in the fixture.

Optional mounting block may be used above or below the work surface. Clamp height is easily reset.

8100, 8300 Mounting Options

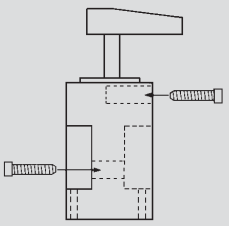

Can be mounted to the side or front of the fixture, or mounted back to back for multiple clamping operations.

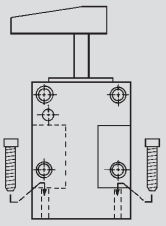

Mounted to the top of the work surface through the two mounting holes in the bottom of unit.

SERIES 8000, 8400

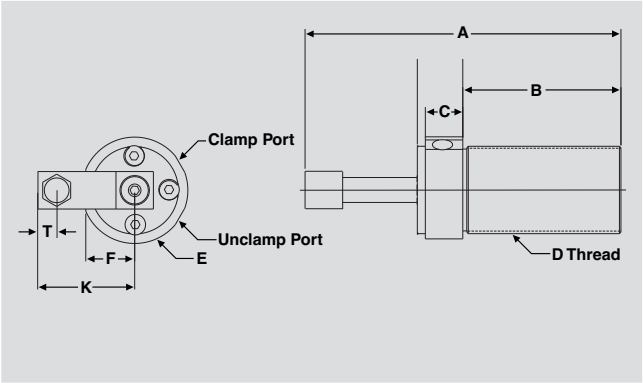

SERIES 8200

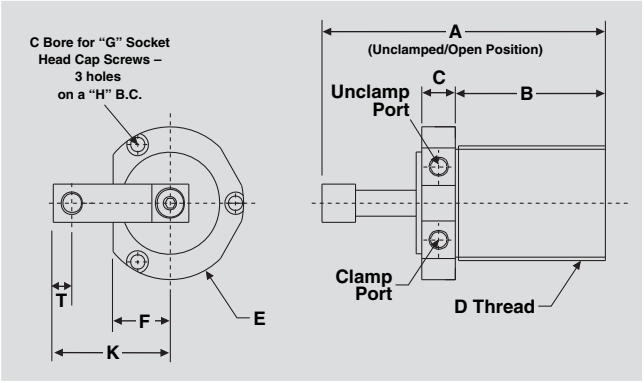

SERIES 8100

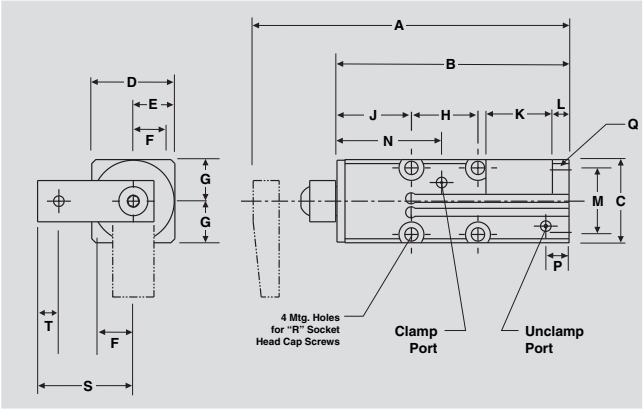

SERIES 8300

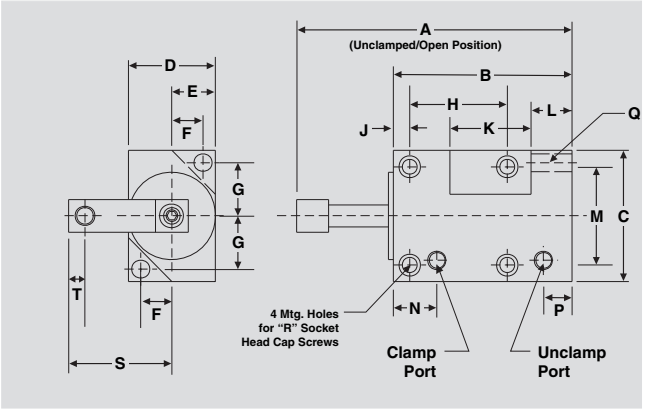

Series no.	Dimensions																		Port Size
	A	B	C	D	E	F	G	H	J	K	L	M	N	P	Q	R	S	T	
8000	4.88	2.87	0.62	1 1/8-16	1.25	–	–	–	–	1.44	–	–	—	—	—	—	—	0.31	#10-32
8100	4.88	3.50	1.25	1.25	0.53	0.47	0.47	1.00	1.12	1.00	0.25	1.00	1.57	0.35	0.20	#10	1.44	0.31	#10-32
8200	6.36	3.36	0.87	2 1/4-12	3.00	1.16	0.25	2.66	–	2.38	–	–	–	–	–	–	–	0.38	1/8 NPT
8300	6.36	4.27	3.00	2.00	1.00	0.72	1.22	2.25	0.53	2.37	0.44	2.25	1.16	0.65	0.40	0.33	2.38	0.38	1/8 NPT
8400	6.14	3.17	0.88	1 3/4-12	2.13	0.98	–	–	–	1.94	–	–	–	–	–	–	–	0.38	1/8 NPT

Model Series 8000, 8100, 8200, 8300, 8400

Model no.	EDP no.	Swing	Arm Supplied	Spindle Supplied	Travel Dur. Rotation	Vertical Clamp Stroke	Maximum Arm Length	Weight [lbs]
8015	58015	RH	801528	305203	0.466	0.38	2.25	1.00
8016	58016	LH	801528	305203	0.466	0.38	2.25	1.00
8015-LA*	58017	RH	OPTIONAL	–	0.466	0.38	2.25	1.00
8016-LA*	58018	LH	OPTIONAL	–	0.466	0.38	2.25	1.00
8115	58115	RH	801528	305203	0.466	0.38	2.25	1.00
8116	58116	LH	801528	305203	0.466	0.38	2.25	1.00
8115-LA*	58117	RH	OPTIONAL	–	0.466	0.38	2.25	1.00
8116-LA*	58118	LH	OPTIONAL	–	0.466	0.38	2.25	1.00
8215	58215	RH	821512	485203-AL	0.75	0.50	3.00	2.00
8216	58216	LH	821512	485203-AL	0.75	0.50	3.00	2.00
8215-LA*	58217	RH	OPTIONAL	–	0.75	0.50	3.00	2.00
8216-LA*	58218	LH	OPTIONAL	–	0.75	0.50	3.00	2.00
8315	58315	RH	821512	485203-AL	0.75	0.50	3.00	2.00
8316	58316	LH	821512	485203-AL	0.75	0.50	3.00	2.00
8315-LA*	58317	RH	OPTIONAL	–	0.75	0.50	3.00	2.00
8316-LA*	58318	LH	OPTIONAL	–	0.75	0.50	3.00	2.00
8415	58415	RH	821512	485203-AL	0.75	0.50	3.00	1.50
8416	58416	LH	821512	485203-AL	0.75	0.50	3.00	1.50
8415-LA*	58414	RH	OPTIONAL	–	0.75	0.50	3.00	1.50
8416-LA*	58420	LH	OPTIONAL	–	0.75	0.50	3.00	1.50

*Clamp provided less arm. Customers to select arm as an option.
See page 13.2 for additional switches.


Series 8000

Series 8100


Series 8200


Series 8300


Series 8400

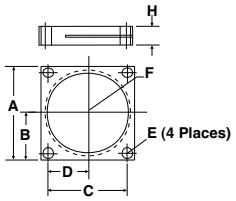

Mounting Block

Part no.	EDP no.	Use With Series no.	A	B	C	D	E	F	H
801553	58033	8000	1.38	0.69	1.08	0.54	0.20	1-1/8-16	0.50
821553	58233	8200	2.50	1.25	2.12	1.06	0.28	2-1/4-12	0.50
841550	58418	8400	2.00	1.00	1.60	0.80	0.28	1-3/4-12	0.50

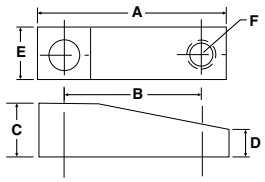

Arm

Part no.	EDP no.	Use With Series no.	A	B	C	D	E	F	G
801528	58058	8000, 8100	1.75	1.12	0.39	0.27	0.62	10-32	–
801529	58059	8000, 8100	2.87	2.25	0.39	0.27	0.62	10-32	–
821512	58252	8200, 8300	2.75	2.00	0.75	0.37	0.75	3/8-16	–
821513	58253	8200, 8300, 8400	3.75	3.00	0.75	0.37	0.75	3/8-16	–
841512	58417	8400	2.31	1.56	0.75	0.37	0.75	3/8-16	–

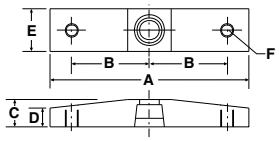

T-Arm

Part no.	EDP no.	Use With Series no.	A	B	C	D	E	F	G
801530	58053	8000, 8100	2.88	1.12 (2)	0.39	0.27 (2)	0.62	10-32 (2)	–
801531	58051	8000, 8100	5.12	2.25 (2)	0.39	0.27 (2)	0.62	10-32 (2)	–
821554	58254	8200, 8300	4.75	2.00 (2)	0.75	0.37 (2)	0.75	3/8-16 (2)	–
821555	58251	8200, 8300	6.75	3.00 (2)	0.75	0.37 (2)	0.75	3/8-16 (2)	–

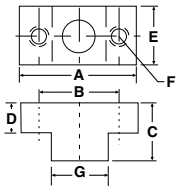

Blank Arm

Part no.	EDP no.	Use With Series no.	A	B	C	D	E	F	G
801532	58052	8000, 8100	1.37	1.00	0.39	0.25	0.62	10-32 (2)	0.62
821556	58256	8200, 8300	1.50	1.06	0.75	0.37	0.75	1/4-20 (2)	0.75

89R Series – Features

NEW

Your requirements

Compact – ideal for restricted space applications
Access to the workpiece possible from above
High flexibility in the application – various “add on” options
Reduced exerting forces are sufficient in order to hold the workpiece securely

The solution

The new pneumatic swing clamps from DE-STA-CO

Special features

Mounting flexibility by means of body mount flange, end mount flange, mounting feet (accessories)
Easily adjustable left-hand, right-hand, straight pull actions (20 mm diameter not adjustable)
Double-acting cylinder
Magnetic ring on piston with sensors available
Lightweight aluminum body
Piston rod, hard-chrome plated
Rod seal and wiper built in
Clamp can produce several million cycles
Operation with oil-free air

Adjustment of the swivel direction

1. Unscrew the guide bolt
2. Adjust the piston rod until the required swivel groove (right, left, straight) is lined up with the hole in the body
3. Insert guide bolt and tighten it
4. Take care that the seal ring is seated correctly

Technical data

Cylinder diameter:
20 mm, 32 mm, 40 mm, 50 mm, 63 mm
Clamping strokes: 10 mm, 25 mm, 50 mm
(upon request for diameters 40 mm, 50 mm and 63 mm)
Exerting forces: 20 lbs. to 242 lbs. at 80 PSI

Operating instruction

A PDF file of the operating instruction is available
You can also download it from our homepage on www.destaco.com

Practical tips

Rotational movement of clamp arm should not be restricted
Clamping operation should not occur during rotation of the clamp arm
Remove the clamp arm from the piston rod by tapping only from below and not from the side

Clamp arm assembly

See operating instructions

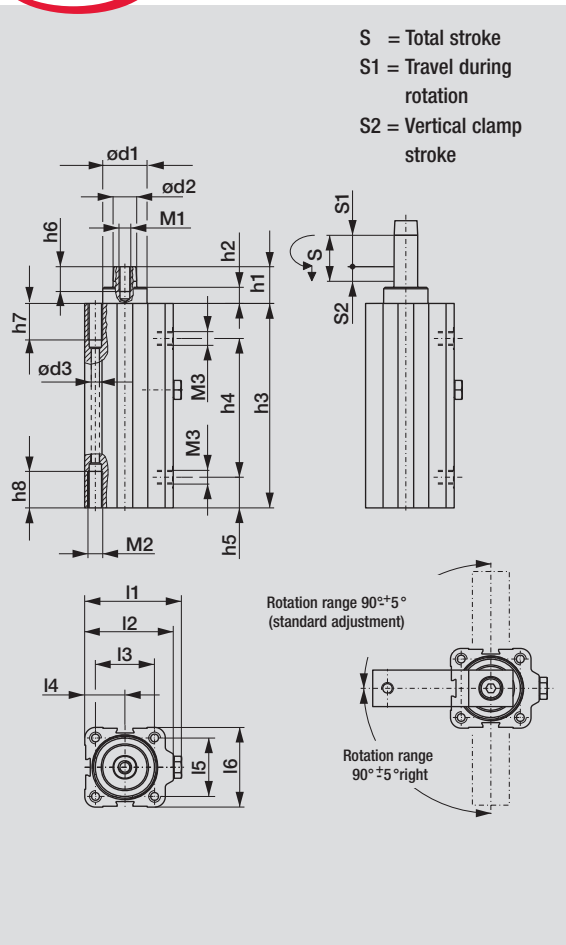

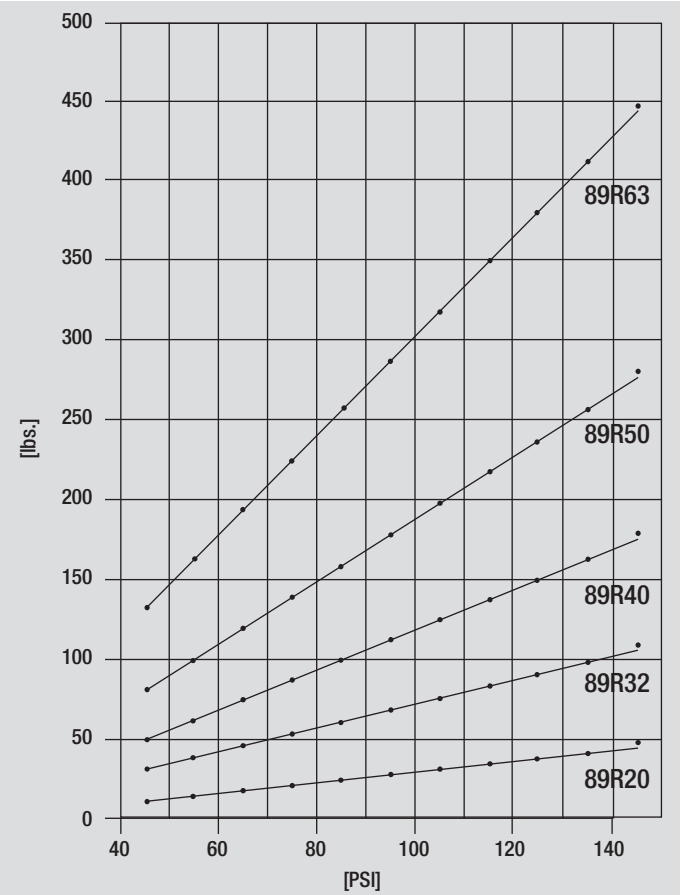

Exerting force diagram

Model no.	Total stroke S [mm]	Travel during rotation S1 [mm]	Vertical clamp S2 [mm]	Operating pressure min. PSI	Operating pressure max. PSI	Exerting force at 80 PSI	Piston dia. S1 [mm]	Weight [lbs.]
89R20-010-1	21.0	11.0	10	30	145	20	20	0.66
89R32-010-1	28.0	18.0	10			62	32	1.32
89R40-010-1	31.5	21.5	10			94	40	2.09
89R40-025-1	46.5	21.5	25			94	40	2.43
89R50-025-1	52.0	27.0	25			154	50	3.97
89R63-025-1	58.5	33.5	25			242	63	6.17

Model no.	ød1	ød2	ød3	h1	h2	h3	h4	h5	h6	h7	h8	l1	l2	l3	l4	l5	l6	M1	M2	M3
89R20-010-1	18	10	4.6	19.8	8	105.5	66.0	13.2	15	14	14	39.5	35.0	22	16.0	22	32	M5	M6	M5
89R32-010-1	22	12	5.5	23.7	11	125.0	83.0	17.5	17	16	16	60.0	54.0	36	24.0	32	45	M6	M8	G1/8
89R40-010-1	30	16	5.5	25.0	11	140.0	95.0	21.0	17	25	25	66.0	60.0	40	27.3	40	54.5	M8	M8	G1/8
89R40-025-1	30	16	5.5	25.0	11	170.0	125.0	21.0	17	25	25	66.0	60.0	40	27.3	40	54.5	M8	M8	G1/8
89R50-025-1	40	18	7.4	31.4	11	194.5	137.0	26.7	25	25	25	78.5	72.5	50	32.5	50	65	M10	M10	G1/8
89R63-025-1	45	20	9.3	33.0	15	211.5	154.5	26.5	25	25	25	95.0	88.0	62	40.0	62	80	M10	M12	G1/4

Blank Arm

Product features

For attaching custom made clamp arms
360° rotatable arm
Made of aluminum

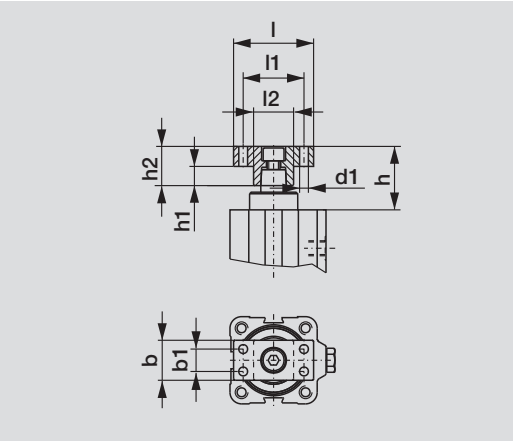

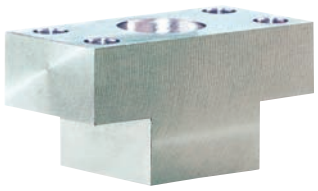

Order no. Adaptor	Use with Clamp Model no.	l	l1 ±0,2	l2	h	h1	M1	b ±0,2	b1	Weight [lbs./pc]
8MA-084-1	89R20-010-1	40	28	16	27.8	7	15	5.5	–	0.03
8MA-086-1	89R32-010-1	50	35	20	35.7	9	20	5.5	–	0.08
8MA-087-1	89R40-010-1	50	38	25	40.0	12	25	5.5	14	0.11
8MA-087-1	89R40-025-1	50	38	25	40.0	12	25	5.5	14	0.11
8MA-088-1	89R50-025-1	60	45	30	48.4	15	30	7.0	15	0.19
8MA-089-1	89R63-025-1	65	48	32	53.0	18	35	9.0	18	0.28

Body Mount Flange

Product features

For use as a model recessed to the fixture
Variable height adjustment
Can be used with end position sensors
Made of aluminum

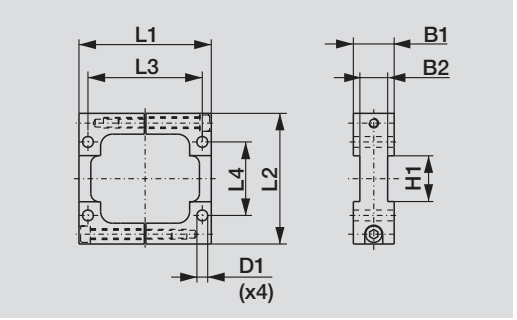

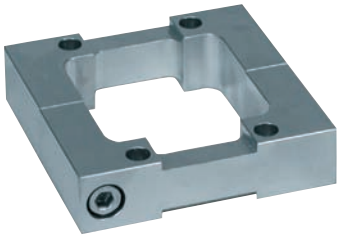

Order no. Body Mount Flange	Use with Clamp Model no.	L1	L2	L3	L4	D1	B1	B2	H1	Weight [lbs./pc]
8MA-092-1	89R20-010-1	57	55	47	24	5.5	15	–	–	0.22
8MA-094-1	89R32-010-1	81	75	70	40	6.6	20	12	25	0.44
8MA-095-1	89R40-010-1	81	80	70	45	6.6	25	17	28	0.55
8MA-095-1	89R40-025-1	81	80	70	45	6.6	25	17	28	0.55
8MA-096-1	89R50-025-1	101.5	100	85.5	50	9	25	17	37	0.88
8MA-097-1	89R63-025-1	122	120	104	68	11	30	20	38	1.43

Standard Clamp Arm

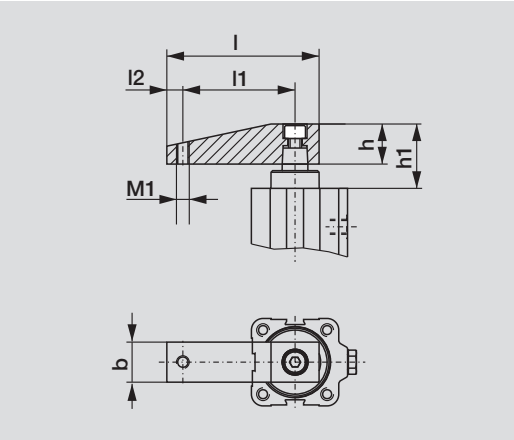

Product features

For standard use
360° rotatable arm
Spindle is an accessory part
(see manual clamp accessories section for spindle option beginning page 9.1)
Made of aluminum

Order no. Clamping Arm	Used with Clamp Model no.	l	l1	l2	h	h1	M1	b	Weight [lbs./pc]
8JG-215-1	89R20-010-1	67	52	7	15	27.8	M6	15	0.08
8JG-217-1	89R32-010-1	80	60	10	20	35.7	M8	20	0.14
8JG-218-1	89R40-010-1	95	70	10	25	40.0	M8	25	0.28
8JG-218-1	89R40-025-1	95	70	10	25	40.0	M8	25	0.28
8JG-219-1	89R50-025-1	106	80	10	30	48.4	M8	30	0.42
8JG-220-1	89R63-025-1	120	90	12	35	53.0	M10	35	0.66

End Mount Flange

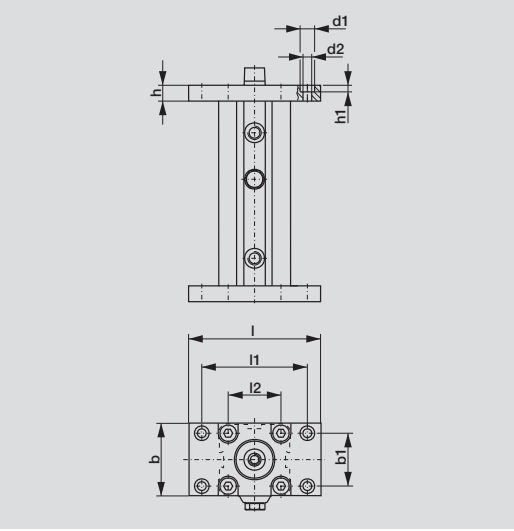

Product features

Can be mounted on bottom side and top side of clamp
Made of aluminum

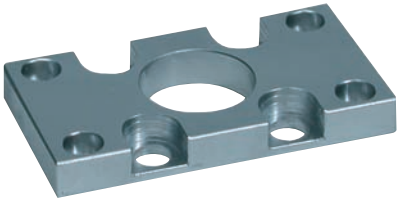

Order no. End Mount Flange	Used with Clamp Model no.	h	h1	d1	d2	l	l1 ±0,2	b	b1 ±0,2	Weight [lbs./pc]
8MA-061-1	89R20-010-1	10	7	11	6.6	65	50	32	18	0.07
8MA-063-1	89R32-010-1	12	7	11	6.6	80	64	50	32	0.20
8MA-064-1	89R40-010-1	12	7	11	6.6	100	80	55	40	0.29
8MA-064-1	89R40-025-1	12	7	11	6.6	100	80	55	40	0.29
8MA-065-1	89R50-025-1	15	9	15	8.5	120	100	65	45	0.46
8MA-066-1	89R63-025-1	15	9	15	8.8	130	110	80	60	0.66

Magnetic Sensors

Product features

Switch groove located on 3 sides of the cylinder

Continuously adjustable by means of dovetailed groove

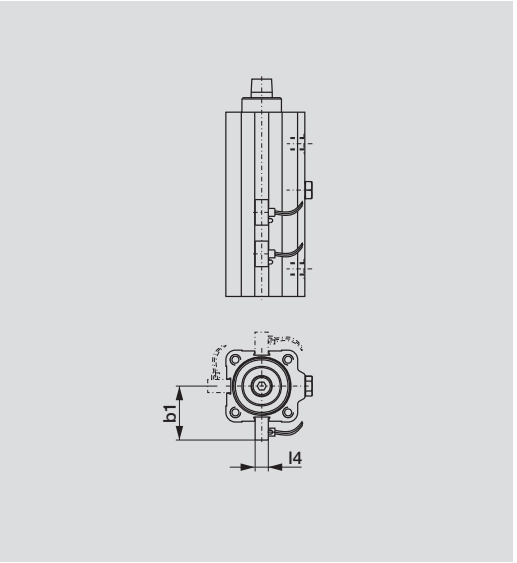

Sensors for magnetic field workpiece control system (SME-3-LED) with integrated protective circuit and light-emitting diode (PNP output)

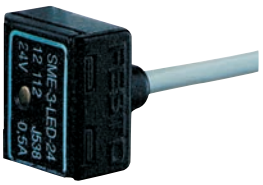

Technical Data

Medium:	magnetic field and electric current
Type of design:	electrical signal transmitter for contactless position indication
Type of attachment:	clamping in longitudinal keyway
Connection:	3-core cable, 2.5 m, max. 10 W/500 mA/12-27 V AC/DC
Type of protection in accordance with DIN 40050:	IP 66
Temperature range:	fixed cable installation -20º to + 60° C,
	moveable cable installation -5º to + 60° C
Material:	housing GD-Mg, cable PVC

Order no. Magnetic Sensors	Used with Clamp Model no.	b1	l4	Weight [lbs./pc]				
SME-3-LED	89R20-010-1	31.0	10.5	0.09				
SME-3-LED	89R32-010-1	37.5	10.5	0.09				
SME-3-LED	89R40-010-1	42.3	10.5	0.09				
SME-3-LED	89R40-025-1	42.3	10.5	0.09				
SME-3-LED	89R50-025-1	47.5	10.5	0.09				
SME-3-LED	89R63-025-1	55.0	10.5	0.09				

Mounting Feet

Product features

Can be mounted on bottom side or front side

Can be mounted on 4 sides of the cylinder

Made of aluminum

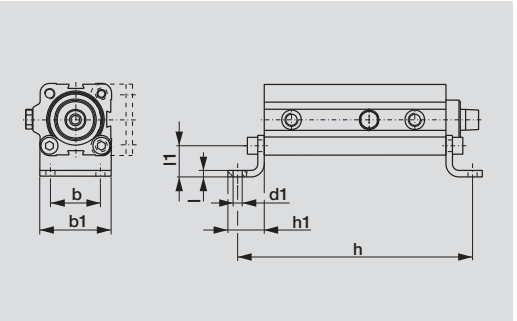

Order no. Mounting Feet	Used with Clamp Model no.	h	h1	d1	l	l1	b	b1	Weight [lbs./pc]
8MW-018-1	89R20-010-1	137.5	22	7	4	16	22	35	0.08
8MW-020-1	89R32-010-1	166.0	28	7	4	18	35	50	0.15
8MW-021-1	89R40-010-1	181.0	28	7	5	24	40	55	0.22
8MW-021-1	89R40-025-1	211.0	28	7	5	24	40	55	0.22
8MW-022-1	89R50-025-1	238.5	32	9	6	24	50	67	0.33
8MW-023-1	89R63-025-1	263.5	40	11	6	27	62	85	0.52

9500 Series – Features

NEW

DE-STA-CO's newest generation swing clamp with patented swing technology. Unique designs allows clamp arm to swing 90º on a horizontal plane before moving downward on its clamping stroke.

Patent No. 7,290,480

COMING SOON: 13 mm and 22 mm sizes.
LOOK FOR THESE IN OUR 2008 CATALOG

Product Features

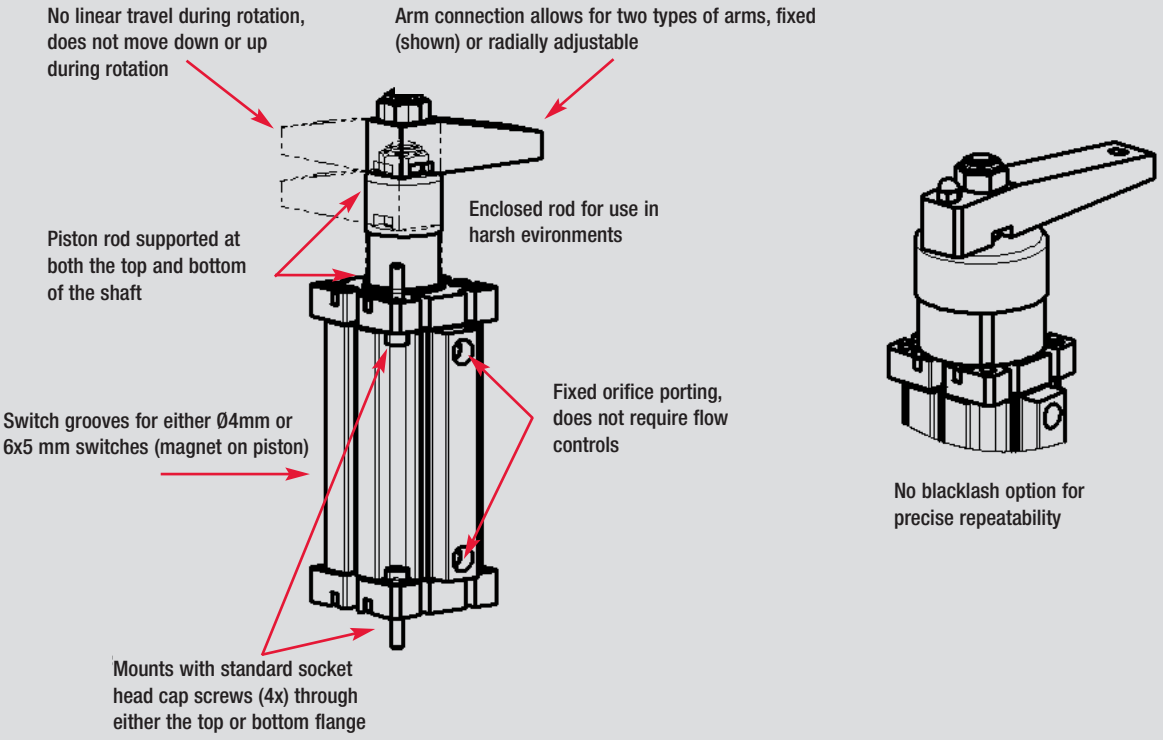

Series no.	Clamp Force (lbs.)									
9540	Straight Pull	71	88	106	124	141	159	177	194	212
	W/"T" Arm	36	44	53	62	71	80	89	97	106
	W/2.0" Arm	46	60	76	92	105	118	131	147	161
	W/3.0" Arm	34	43	52	61	70	79	87	96	105
9530	Straight Pull	41	52	62	72	83	93	103	114	124
	W/"T" Arm	21	26	31	36	42	47	52	57	62
	W/2.0" Arm	26	34	44	52	61	68	76	84	92
	W/3.0" Arm	20	25	30	35	40	45	50	55	60
	Air Pressure (PSI)	40	50	60	70	80	90	100	110	120

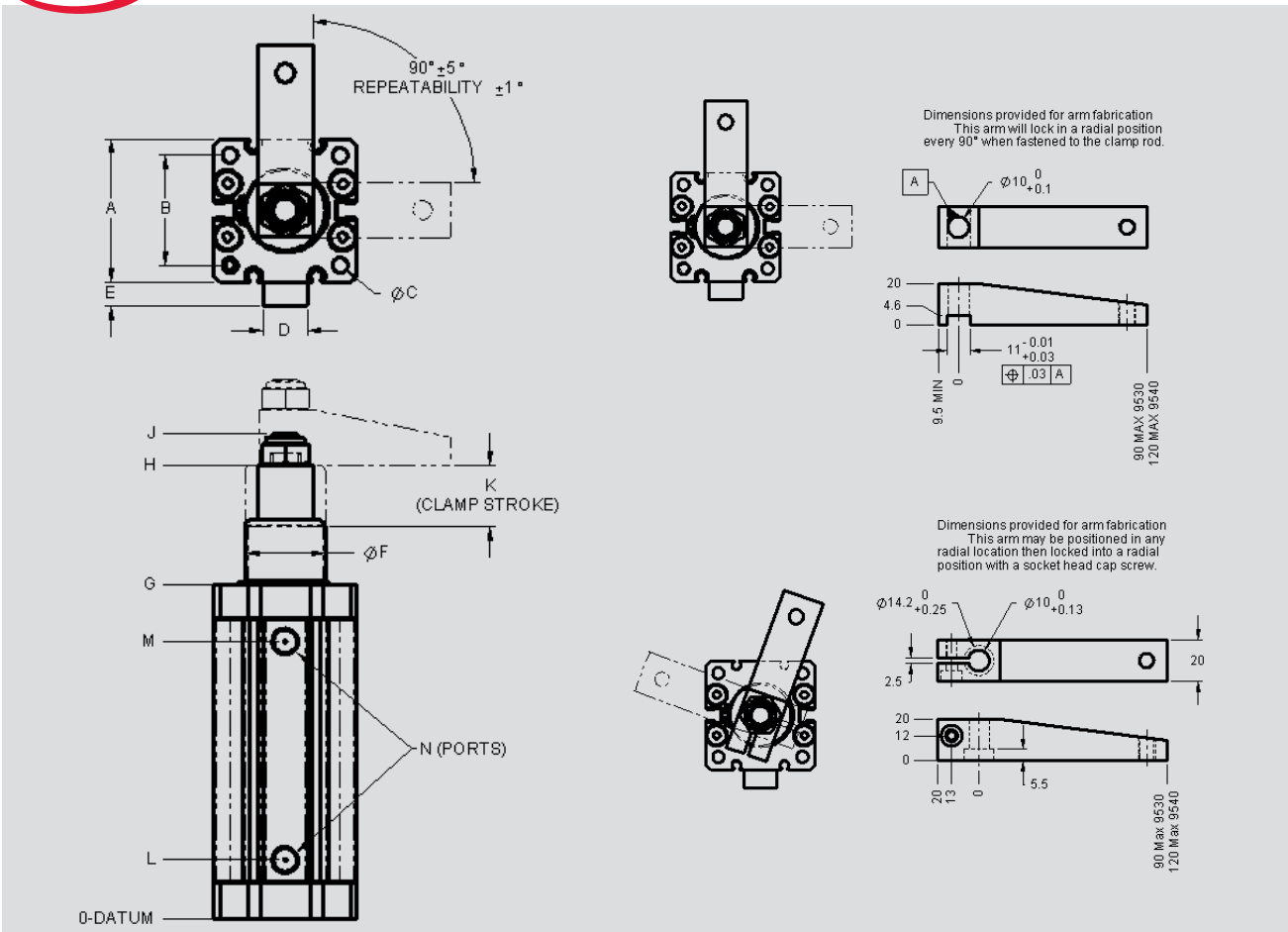

Model no.	Swing Direction	A	B	øC	D	E	øF	G	H	J	K	L	M	N
9530R	RH	44.7	34	5.5	12.7	5.1	25.4	112.7	155.7	167.3	20	17.4	95.3	1/8 NPT
9530L	LH													
9540R	RH	52	40	5.5	16	9	29	121.4	165	176.2	20	21.3	100.8	1/8 NPT
9540L	LH													

All dimensions shown in metric (mm)

Clamp Arm Options (Can be used with 9530 and 9540 Series)

These standard arms can be mounted in 90º increments to the piston rod.

954050

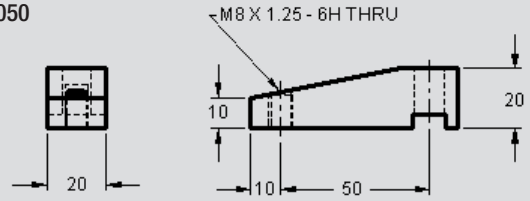

954054

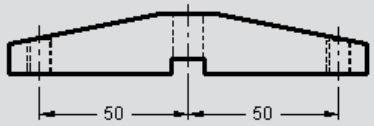

954053

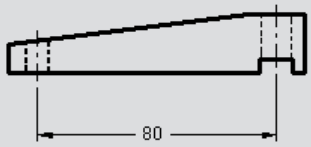

954055

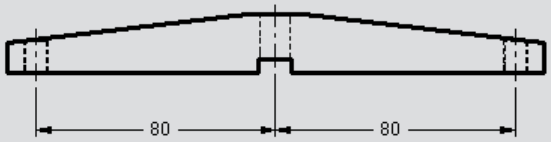

Notes

NEW

Models:

810164, 810167, 810171, 810174

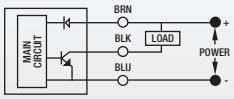

810159, 810168, 810169, 810175

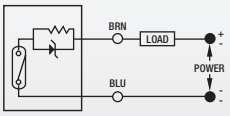

810163, 810166, 810170, 810173

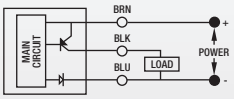

810165, 810172

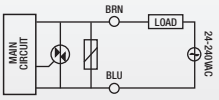

page 13.3

Models 810159-810175

NEW

Cable: Robotic Grade, abrasion resistant polyurethane (PUR) jacket, PVC Insulation
Temperature Range: 14º to 158° F (-10º to +70° C)
Enclosure Classification: IP67 (NEMA 6)

Tie Rod Mount Models	
810165	Cord is 3 meters long
810172	Cord is 6" long with M8 Male

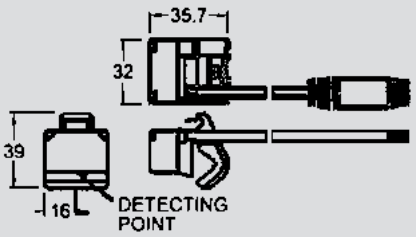

Model 8315 with sensor

Model 807-S with sensor

Mount example

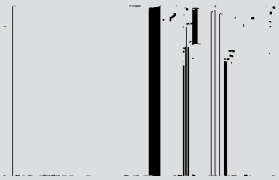

Assembly

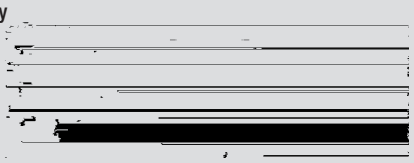

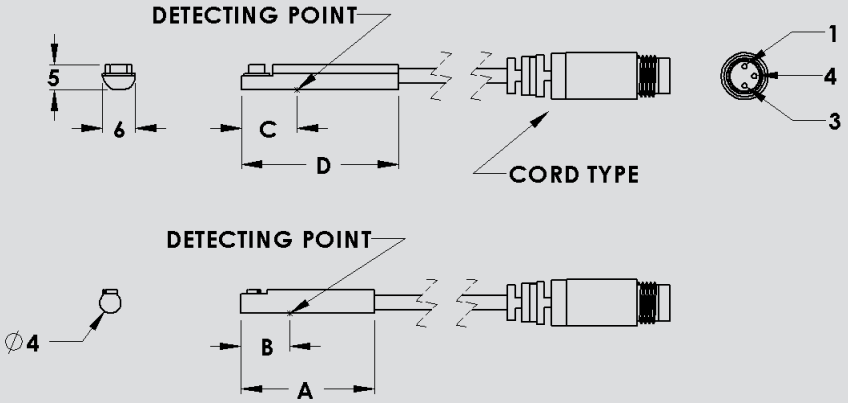

Dimensions

Model no.	A	B	C	D	1	4	3	Cord Type
810159	22	10	–	–	–	–	–	3 Meters Long (no connecter)
810163	–	–	8	30	–	–	–	3 Meters Long (no connecter)
810164	–	–	8	30	–	–	–	3 Meters Long (no connecter)
810165	See Illustration				–	–	–	3 Meters Long (no connecter)
810166	18.5	6	–	–	–	–	–	3 Meters Long (no connecter)
810167	18.5	6	–	–	–	–	–	3 Meters Long (no connecter)
810168	–	–	13	30	–	–	–	3 Meters Long (no connecter)
810169	22	10	–	–	BRN(+)	Not Used	BLU(-)	6" Male, M8 Connector
810170	–	–	8	30	BRN(+)	BLK(OUT)	BLU(-)	6" Male, M8 Connector
810171	–	–	8	30	BRN(+)	BLK(OUT)	BLU(-)	6" Male, M8 Connector
810172	See Illustration				BRN(+)	Not Used	BLU(-)	6" Male, M8 Connector
810173	18.5	6	–	–	BRN(+)	BLK(OUT)	BLU(-)	6" Male, M8 Connector
810174	18.5	6	–	–	BRN(+)	BLK(OUT)	BLU(-)	6" Male, M8 Connector
810175	–	–	13	30	BRN(+)	Not Used	BLU(-)	6" Male, M8 Connector

Wiring diagrams

810164, 810167, 810171, 810174

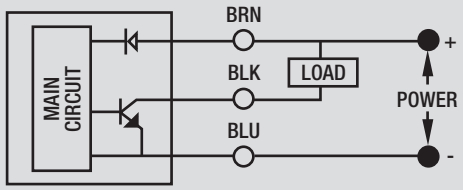

810159, 810168, 810169, 810175

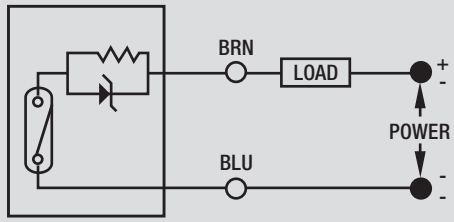

810163, 810166, 810170, 810173

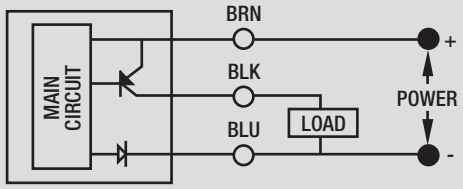

810165, 810172

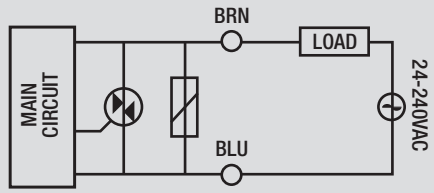

Specifications

Model no.	Mount	Sensor Type	Operation	Operation Voltage	Switching Current	Power Rating	Voltage Drop	Protection Circuit
810159	ø4mm	Reed Switch	SPST Normally Open	5-120V DC/AC 50/60Hz	50mA Max.	6 Watts	3.0V Max.	None
810163	6.5 x 5mm	Solid State	PNP Normally Open	10-30V DC	100mA Max.	3 Watts	2.0V Max.	Reverse Polarity, Short Circuit
810164	6.5 x 5mm	Solid State	NPN Normally Open	10-30V DC	100mA Max.	3 Watts	2.0V Max.	Reverse Polarity, Short Circuit
810165	Tie Rod	Solid State	TRIAC Normally Open	24-240 V AC 50/60 Hz Only	4 AmpsMax-25 AmpInrush	30 Watts	1.5 V @ .05 A Max.	Reverse Polarity, Short Circuit
810166	ø4mm	Solid State	PNP Normally Open	4.5-28 V DC	100mA Max.	3 Watts	0.5 V @ 50mA Max.	Rev Pol, Surge Suppression
810167	ø4mm	Solid State	NPN Normally Open	4.5-28 V DC	100mA Max.	3 Watts	0.5 V @ 50mA Max.	Rev Pol, Surge Suppression
810168	6.5 x 5mm	Reed Switch	SPST Normally Open	5-220V DC/AC 50/60Hz	100mA Max.	10 Watts	3.0V Max.	None
810169	ø4mm	Reed Switch	SPST Normally Open	5-120V DC/AC 50/60Hz	50mA Max.	6 Watts	3.0V Max.	None
810170	6.5 x 5mm	Solid State	PNP Normally Open	10-30V DC	100mA Max.	3 Watts	2.0V Max.	Reverse Polarity, Short Circuit
810171	6.5 x 5mm	Solid State	NPN Normally Open	10-30V DC	100mA Max.	3 Watts	2.0V Max.	Reverse Polarity, Short Circuit
810172	Tie Rod	Solid State	TRIAC Normally Open	24-240 V AC 50/60 Hz Only	4AmpsMax-25AmpInrush	30 Watts	1.5 V @ .05 A Max.	Reverse Polarity, Short Circuit
810173	ø4mm	Solid State	PNP Normally Open	4.5-28 V DC	100mA Max.	3 Watts	0.5 V @ 50mA Max.	Rev Pol, Surge Suppression
810174	ø4mm	Solid State	NPN Normally Open	4.5-28 V DC	100mA Max.	3 Watts	0.5 V @ 50mA Max.	Rev Pol, Surge Suppression
810175	6.5 x 5mm	Reed Switch	SPST Normally Open	5-220V DC/AC 50/60Hz	100mA Max.	10 Watts	3.0V Max.	None

Models 810151, 810152, 810153, 810154, 810155, 810156, 810157, 810158

Switch options are available for the following Models: 812-U, 816, 840, 841, 849, 860, 861, 863, 864, 870, 871, 890, 891, 893, 894, 1000 & 1001.

Reed Switches are available from factory stock. The switches are activated by a magnetic ring installed on the cylinder piston. As the magnetic ring moves under the switch, it closes the contacts and sends a signal to a programmable controller or other electronic device.

Switches have nine-foot leads as standard. Longer leads are available upon special request.

Hall Effect switches are also available on special order. Contact our Customer Service Department.

Switches have a tie-rod mounting clamp as standard. A band clamp is required for 812-U, 816 cylinders used with Switch Models 810156 and 810158. Please order the band clamp as model 810156-1.


Models 810151, 810152, 810154, 810155, 810157

Tie rod clip included


Switch shown mounted on Model 871


Model 810153*


Model 810156 (or 810158) shown mounted on Model 812-U

Part no.	EDP no.	Type	Function	Switching Voltage	Switching Current	Switching Power	Maximum Voltage Drop	Temperature Limit (Ambient)	Lead Wire	Sensitivity and Orientation
810151	58150	REED, MOV, LED	SPST Normally Open	5-120V AC/DC 50/60 HZ	.5A Max. .005A Min.	10 Watts Max.	3.5 Volts	176º F (80º C)	9'	85 Gauss Parallel
810152	58152	REED, MOV, LED	SPST Normally Open	5-120V AC/DC 50/60 HZ	.5A Max. .005A Min.	10 Watts Max.	3.5 Volts	176º F (80º C)	12'	85 Gauss Parallel
810153	58104	REED, MOV, LED	Normally Open	24-240V AC 50/60 HZ	4A Max. .005A Min. 50A in Rush	100 Watts Max.	1 Volt	176º F (80º C)	9'	85 Gauss Parallel
810154	58154	REED, No MOV, No LED	SPST Normally Open	0-120V AC/DC 50/60 HZ	.5A Max.	10 Watts Max.	0 Volt	176º F (80º C)	9'	85 Gauss Parallel
810155	58155	Hall Effect, LED Sourcing	Normally Open PNP Output	6-24V DC 50/60 HZ	.5A Max.	12 Watts Max.	1 Volt	176º F (80º C)	9'	85 Gauss Parallel
810156	58156	REED, MOV, LED	SPST Normally Open	5-120V AC/DC 50/60 HZ	.5A Max. .005A Min.	10 Watts Max.	3.5 Volts	176º F (80º C)	9'	85 Gauss Parallel
810157	58157	Hall Effect	Normally Open NPN Output	6-24V DC	.5A Max.	12 Watts Max.	1 Volt	176º F (80º C)	9'	85 Gauss Parallel
810158	58158	Hall Effect	Normally Open PNP Output	6-24V DC	.5A Max.	12 Watts Max.	1 Volt	176º F (80º C)	9'	85 Gauss Parallel

Note: Models 810156 and 810158 use 810156-1 band clamp to mount the switch to the wall of the cylinder. All other Models use tie-rod clip 810151-1.

WARRANTY ON ELECTRICAL PRODUCTS

DE-STA-CO EXPRESSLY LIMITS THE PRODUCT WARRANTY AS APPLIED TO ANY ELECTRICAL OR ELECTRONIC COMPONENT USED ON OR ASSOCIATED OR CONNECTED WITH ANY PRODUCT TO A PERIOD OF ONE (1) YEAR FROM THE DATE THE PRODUCT IS DELIVERED TO THE FIRST USER.

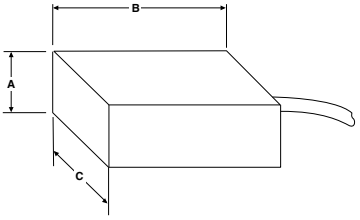

Switch Dimensions (Less Mounting Clip)

Part no.	EDP no.	A	B	C
810151	58105	0.37	0.93	0.53
810152	58152	0.37	0.93	0.53
810153	58104	0.87	1.30	0.67
810154	58154	0.37	0.93	0.53
810155	58155	0.37	0.93	0.53
810156	58156	0.37	0.93	0.53
810157	58157	0.37	0.93	0.53
810158	58158	0.37	0.93	0.53

*To be used on larger clamp models only – Series 847 and higher.

NEW

81L Series

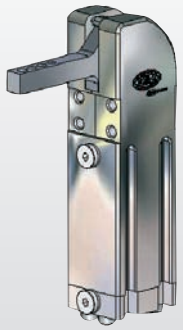

page 14.12

NEW

82L Series

page 14.18

Product group - automation power clamps

	Model no.	Holding Capacity max. [lbs.]	Category	Page
	840 841	1,500 1,500		14.4
	860 861 890 891 1000 1001	3,000 3,000 5,000 5,000 10,000 10,000		14.6
	863 864 893 894			14.8
	991-MRM 1091-MRM			14.10
	81L12 81L16 81L20 81L25			14.12

	Model no.	Holding Capacity max. [lbs.]	Category	Page
	82L25 82L30 82L40		Without manual handle	14.18
				
	82L25 82L32 82L40		With manual handle	14.30
				

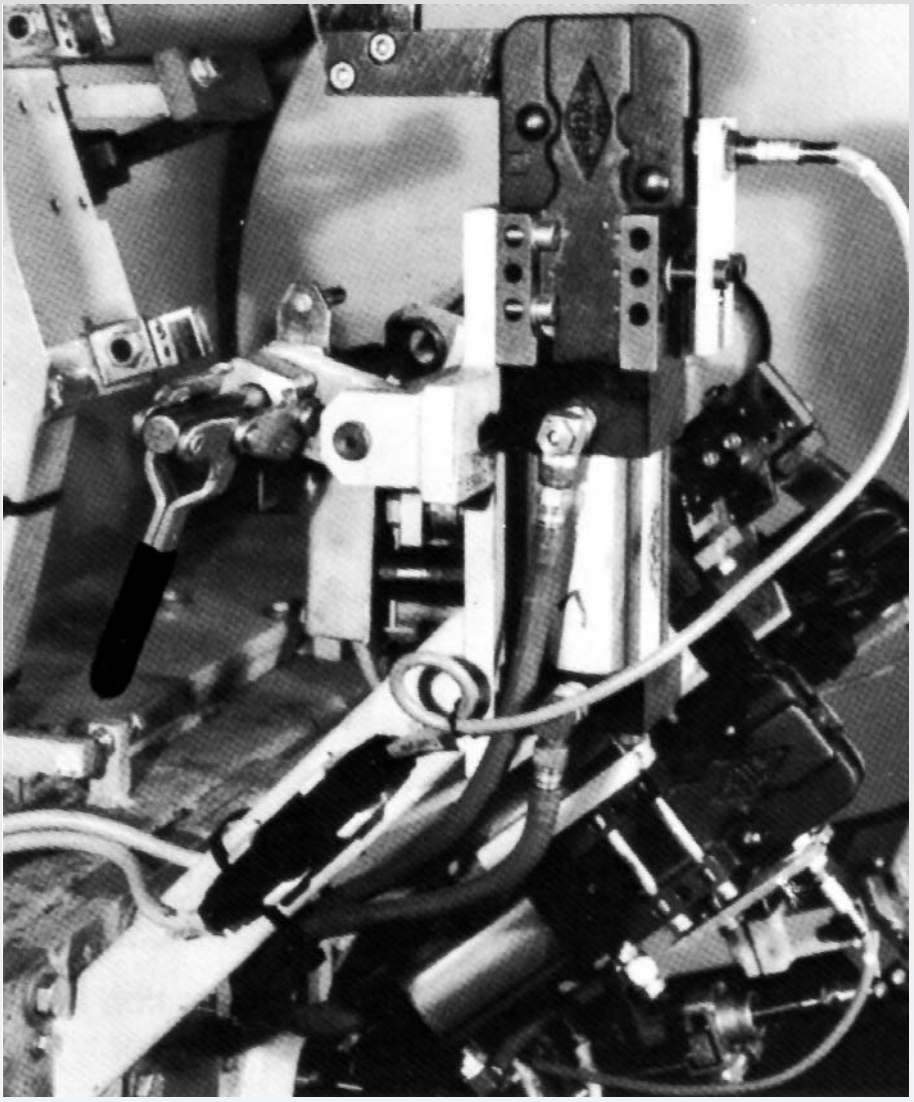

Heavy-duty power clamp 891 and Model 624 straight-line action clamp modified on a welding machine.

Models 840, 841

Designed for high production applications, these toggle action pneumatic clamps offer exceptional clamping forces and holding capacities – far greater than other clamps of similar size. And unlike most pneumatic toggle clamps, they do not require greater pressure to open than to close.

Of special importance in the design of the Series 840 is the oval cylinder. Because of the extremely narrow profile of these clamps, they can be used in cramped quarters or can be ganged closer together in multiple installations.

The even numbered models in this series feature a 180° clamping arm which travels to an over-center locked position parallel (180°) to the clamp centerline. The corresponding odd numbered models have a 90° arm. The angular locked position of both versions is precisely controlled by the hardened steel insert. Clamp arms can be machined, drilled, cut off or welded to suit the application requirements.

Models 840 and 841 are tongue-mount clamps.

ALSO AVAILABLE	
Switch Options	Page 13.5
See accessories beginning on pages 9.1 and 13.1.	

Magnetic Ring Now A Standard Feature

58400
Model 840

58410
Model 841

Model no.	Formula to Calculate Exerting Force
840 841	Max. Clamp Arm Exerting Force (lbs.) = 12 x Line Pressure (PSI) / Distance from Pivot Point to Clamping Point (in.)

Model no.	Holding Torque max. [in. lbf.]	Clamping Torque @ 80 PSI [in. lbf.]	Piston – [in.]	Arm Position	Weight [lbs.]	Port Size NPT	B1	B1a	B2	B2a	B3	B5	B7	B7a	B18
840	4,500	960	1.50	100º	3.90	3/8	1.38	1.38	–	3.69	0.38	0.19	1.00	1.88	1.37
841	4,500	960	1.50	100º	4.25	3/8	1.38	1.38	3.25	–	0.38	0.19	1.00	1.88	1.37

Model no.	B24	B25	B30	øD1	øD4	L1	L2	L3	L4	L4a	L5	L6	L9	L10	L14
840	2.88	0.06	2.50	0.25	0.25	10.05	4.56	3.13	–	0.88	–	0.88	1.25	0.50	1.81
841	2.88	0.06	2.50	0.25	0.25	10.05	4.56	3.13	0.88	–	0.49	0.88	1.25	0.50	1.81

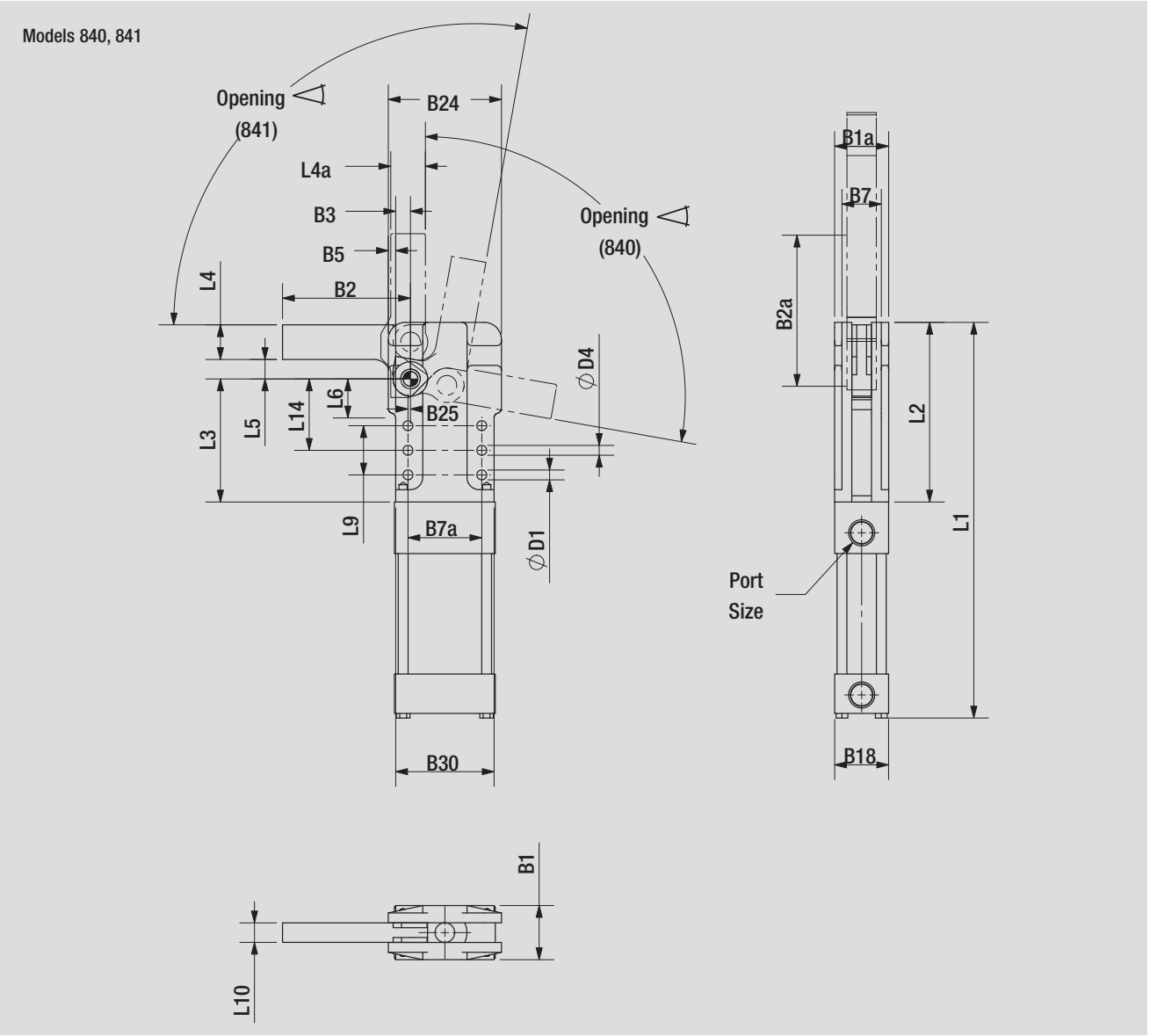

Spare parts

Model no.	Seal kit	Cylinder
840	8410400	840CYL
841	8410400	840CYL

Models 860, 861, 890, 891, 1000, 1001

Automation power clamp, heavy design

Application:

Clamping, holding, gripping and positioning of sheet metal and other parts in jigs and handling systems.

Key areas of application:

High production applications

Features:

- High holding capacities
- Long cycle life
- Mounting flexibility on all four sides
- Clamping arm in horizontal or vertical clamping position
- Toggle action mechanism

ALSO AVAILABLE	
Switch Options	Page 13.5
See accessories beginning on pages 9.1 and 13.1.	

Model no.	Formula to Calculate Exerting Force
860 861	Max. Clamp Arm Exerting Force (lbs.) = 31.25 x Line Pressure (PSI) / Distance from Pivot Point to Clamping Point (in.)
890 891	Max. Clamp Arm Exerting Force (lbs.) = 67.5 x Line Pressure (PSI) / Distance from Pivot Point to Clamping Point (in.)
1000 1001	Max. Clamp Arm Exerting Force (lbs.) = 150 x Line Pressure (PSI) / Distance from Pivot Point to Clamping Point (in.)

Magnetic Ring Now A Standard Feature

Model **861, 891** or **1001**
(clamping arm in horizontal clamping position)

Sensors
(optional)

Model **860, 890** or **1000**
(clamping arm in vertical clamping position)

Technical data

Model no.	Holding Torque max. [in. lbf.]	Clamping Torque @ 80 PSI [in. lbf.]	Piston – [in.]	Arm Position	Weight [lbs.]	Port Size G	B1	B1a	B2	B2a	B3	B5	B7	B7a	B18
860	9,000	2,500	2.00	180º	8.75	3/8	2.94	1.75	–	5.44	0.41	0.25	2.31	2.19	2.50
861	9,000	2,500	2.00	90º	9.00	3/8	2.94	1.75	4.00	–	0.41	0.25	2.31	2.19	2.50
890	15,000	5,400	2.50	180º	13.00	3/8	3.56	2.00	–	6.57	0.50	0.31	2.76	2.50	3.00
891	15,000	5,400	2.50	90º	13.50	3/8	3.56	2.00	5.06	–	0.50	0.31	2.76	2.50	3.00
1000	30,000	12,000	3.25	180º	32.00	1/2	4.50	2.62	–	9.00	0.63	0.44	3.50	3.50	3.75
1001	30,000	12,000	3.25	90º	33.00	1/2	4.50	2.62	7.00	–	0.63	0.44	3.50	3.50	3.75

Model no.	B24	B25	B30	øD1	øD4	L1	L2	L3	L4	L4a	L5	L6	L7	L9	L10	L14
860	3.31	0.09	2.81	0.34	0.31	12.44	5.75	4.06	–	1.12	–	1.44	2.50	1.25	0.62	2.50
861	3.31	0.09	2.81	0.34	0.31	12.44	5.75	4.06	1.13	–	0.40	1.44	2.50	1.25	0.62	2.50
890	3.87	0.13	3.25	0.41	0.38	13.37	6.75	4.75	–	1.25	–	1.75	2.65	1.38	0.81	3.06
891	3.87	0.13	3.25	0.41	0.38	13.37	6.75	4.75	1.25	–	0.50	1.75	2.65	1.38	0.81	3.06
1000	5.38	0.13	4.50	0.53	0.50	17.51	9.25	6.25	–	1.75	–	2.25	3.96	2.00	1.00	3.75
1001	5.38	0.13	4.50	0.53	0.50	17.51	9.25	6.25	1.75	–	0.88	2.25	3.96	2.00	1.00	3.75

Models 860, 861, 890, 891, 1000, 1001

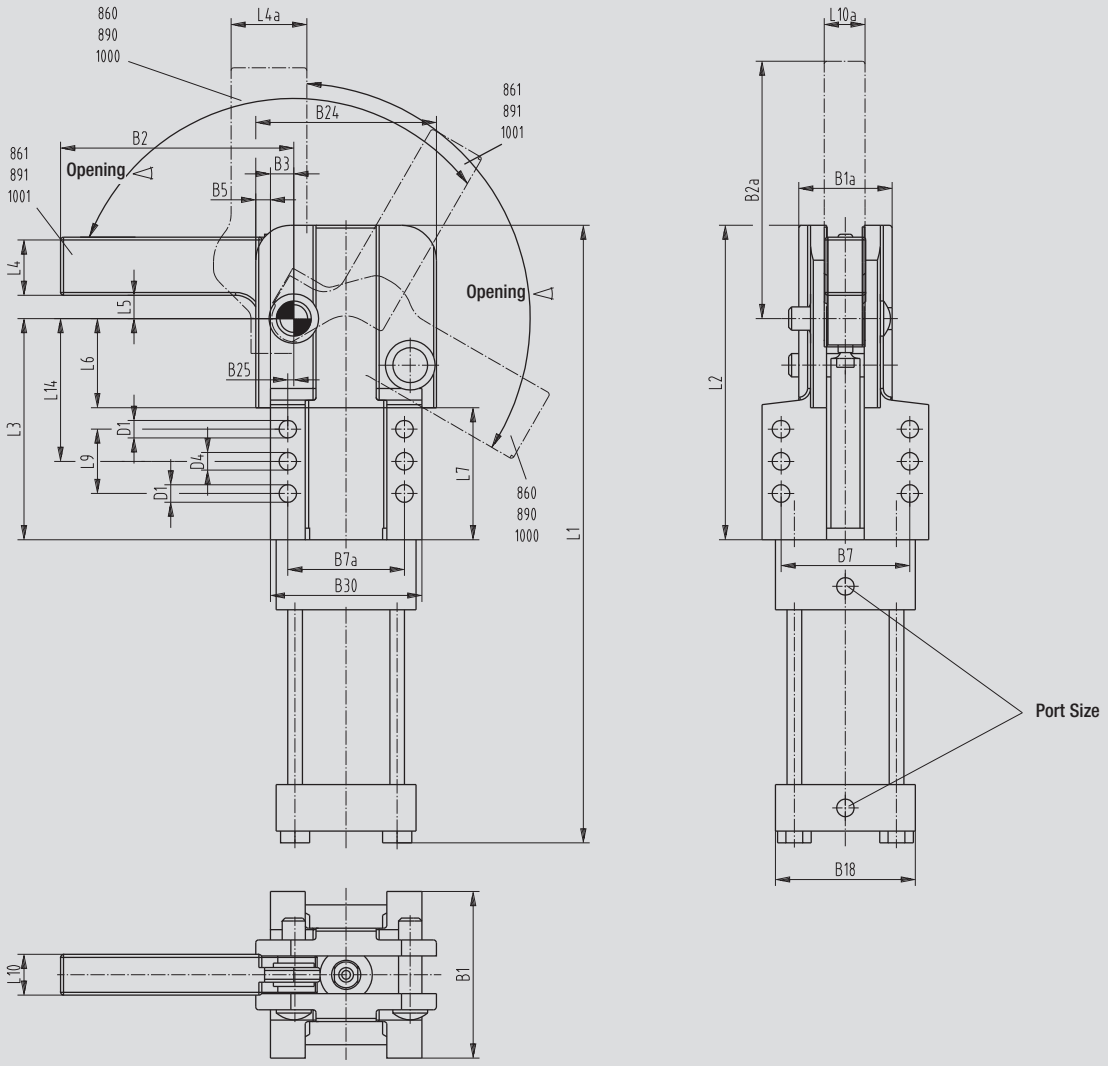

Information for machining of clamp arm: Steel 1.0726

Spare parts

Model no.	Seal kit	Cylinder
860	8610100	865133
861	8610100	865132
890	8910100	895133
891	8910100	895132
1000	10010100	1005134
1001	10010100	1005133

Models 863, 864, 893, 894

These power clamps have many unique features which make them ideal for use in hostile welding and machining environments.

- Linkage is completely enclosed to keep contaminants out.
- Clamp arm is offset, and it can be mounted on the left-side (L), right-side (R) or on both sides of the clamp (D).
- Over-center toggle-lock design for maximum reliability and clamping forces.
- Mounting surfaces allow blade mounting on either side of the clamp.
- Clamp arms are indexable and can be repositioned in 45° increments.
- Magnetic ring sensing options available.
- Clamp arm is weldable/machinable to suit any application.
- Must install supplied restrictor fittings before use.

Magnetic Ring Now A Standard Feature

58631
Model 863-L

58640
Model 864-D

ALSO AVAILABLE	
Switch Options	Page 13.5
See accessories beginning pages 9.1 and 13.1	

58930
Model 893-D

58932
Model 893-R

Model no.	Formula to Calculate Exerting Force
863 864	Max. Clamp Arm Exerting Force (lbs.) = 30 x Line Pressure (PSI) / Distance from Pivot Point to Clamping Point (in.)
893 894	Max. Clamp Arm Exerting Force (lbs.) = 40 x Line Pressure (PSI) / Distance from Pivot Point to Clamping Point (in.)

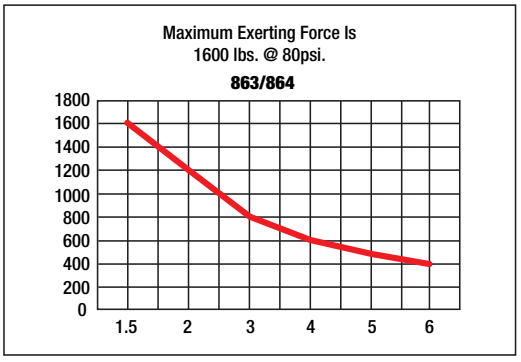

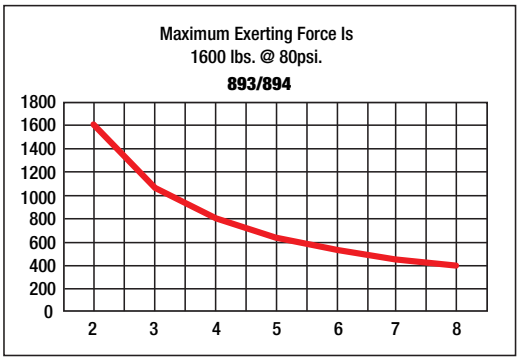

Technical data

Model no.	EDP no.	Weight	Arm Style	Arm Opening
863-D	58630	13.5 lbs.	90º DUAL	130º
863-L	58631	12.5 lbs.	90º L.H.	130º
863-R	58632	12.5 lbs.	90º R.H.	130º
864-D	58640	13.5 lbs.	180º DUAL	121º
864-L	58641	12.5 lbs.	180º L.H.	121º
864-R	58642	12.5 lbs.	180º R.H.	121º
893-D	58930	20.0 lbs.	90º DUAL	118º
893-L	58931	18.0 lbs.	90º L.H.	118º
893-R	58932	18.0 lbs.	90º R.H.	118º
894-D	58940	20.0 lbs.	180º DUAL	118º
894-L	58941	18.0 lbs.	180º L.H.	118º
894-R	58942	18.0 lbs.	180º R.H.	118º

Model 863

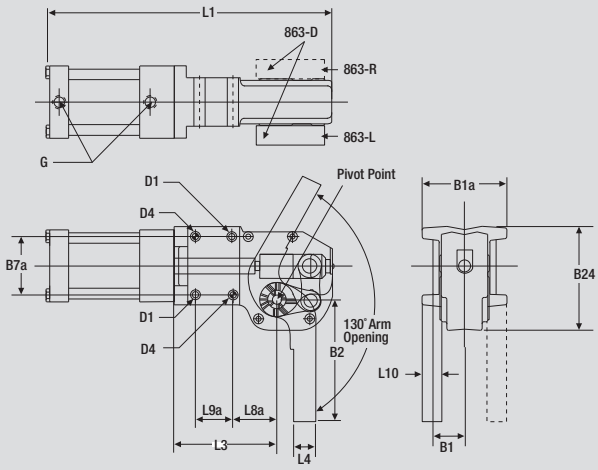

Model 893

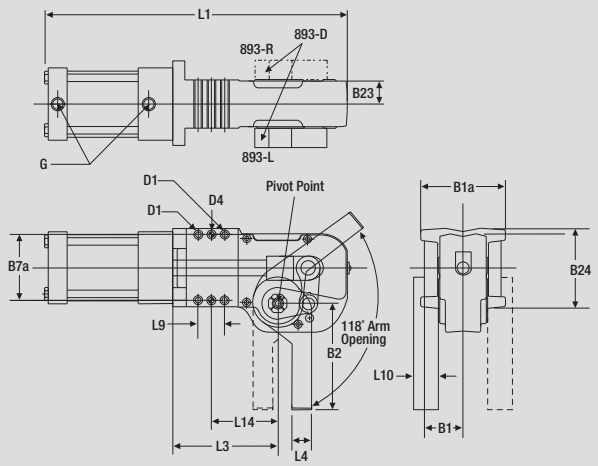

Model 864

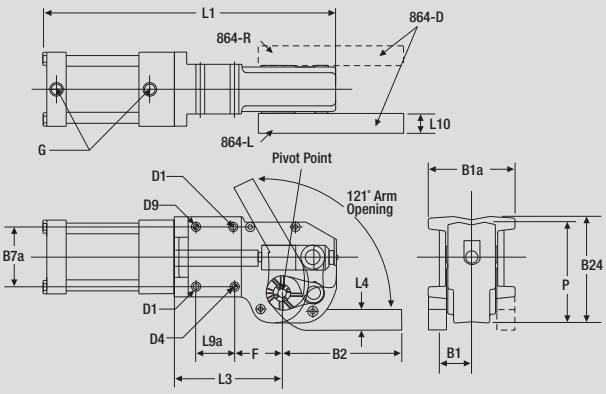

Model 894

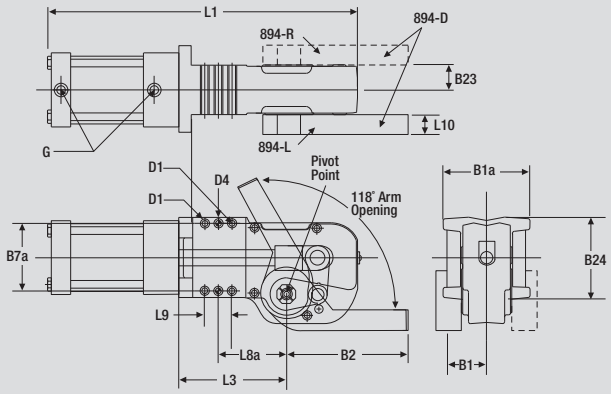

Model no.	B1	B1a	B2	B7a	B23	B24	D1	D4	G	L1	L3	L4	L8a	L9a	L10		
863-D	1.31	2.50	5.00	1.77	–	3.64	3/8-16 (4)	0.37 (2)	3/8 NPT(2)	13.58	4.31	1.00	1.61	1.77	0.75		
863-L	1.31	2.50	5.00	1.77	–	3.64	3/8-16 (4)	0.37 (2)	3/8 NPT(2)	13.58	4.31	1.00	1.61	1.77	0.75		
863-R	1.31	2.50	5.00	1.77	–	3.64	3/8-16 (4)	0.37 (2)	3/8 NPT(2)	13.58	4.31	1.00	1.61	1.77	0.75		
864-D	1.31	2.50	5.00	1.77	–	3.64	3/8-16 (4)	0.37 (2)	3/8 NPT(2)	13.58	4.31	1.00	1.61	1.77	0.75		
864-L	1.31	2.50	5.00	1.77	–	3.64	3/8-16 (4)	0.37 (2)	3/8 NPT(2)	13.58	4.31	1.00	1.61	1.77	0.75		
864-R	1.31	2.50	5.00	1.77	–	3.64	3/8-16 (4)	0.37 (2)	3/8 NPT(2)	13.58	4.31	1.00	1.61	1.77	0.75		
893-D	1.50	3.48	5.00	2.50	1.01	3.22	3/8-16 (8)	0.37 (2)	3/8 NPT(2)	14.60	4.86	1.00	3.00	1.38	1.00		
893-L	1.50	3.48	5.00	2.50	1.01	3.22	3/8-16 (8)	0.37 (2)	3/8 NPT(2)	14.60	4.86	1.00	3.00	1.38	1.00		
893-R	1.50	3.48	5.00	2.50	1.01	3.22	3/8-16 (8)	0.37 (2)	3/8 NPT(2)	14.60	4.86	1.00	3.00	1.38	1.00		
894-D	1.50	3.48	5.00	2.50	1.01	3.22	3/8-16 (8)	0.37 (2)	3/8 NPT(2)	14.60	4.86	1.00	3.00	1.38	1.00		
894-L	1.50	3.48	5.00	2.50	1.01	3.22	3/8-16 (8)	0.37 (2)	3/8 NPT(2)	14.60	4.86	1.00	3.00	1.38	1.00		
894-R	1.50	3.48	5.00	2.50	1.01	3.22	3/8-16 (8)	0.37 (2)	3/8 NPT(2)	14.60	4.86	1.00	3.00	1.38	1.00		

Available upon request, as are a number of other modifications Note: See pages 9.1 and 13.1 for accessories

Models 991-MRM, 1091-MRM

Extreme Temperature Pneumatic Clamps

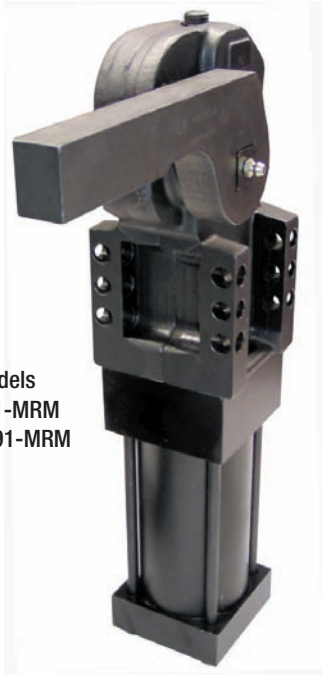

Models
991-MRM
1091-MRM

These new, fully-enclosed high temperature power clamps are manufactured using proprietary coatings and extreme temperature grease and seals. This makes them ideal for rotary molding applications. With the clamps over-center toggle lock design, air lines can be disconnected, allowing the clamps to travel in and out of high temperature ovens while maintaining constant clamping pressure.

Features:

- Roller bearing used in high-stress loading points
- Over-center toggle lock mechanism
- Fully-enclosed mechanism packed with no melt, extreme temperature grease
- Extreme temperature polymer seals
- Totally enclosed clamp assembly

Benefits:

- Powerful holding and exerting forces
- Clamp remains locked when air pressure is lost or removed
- Specifically designed for rotary molding applications
- Capable of continuous exposure to 500° F and short exposure to 700° F ovens
- Retains lubrication while keeping out quench spray and other contaminants for reduced maintenance

Model no.	Weight	Arm Style*	Arm Opening
991-MRM	18 lbs.	90º Dual	118º
1091-MRM	33 lbs.	90º Dual	98º
Available upon request			

*Clamp arm can be positioned in 180° by removing the arm while the clamp is in the closed position – then adjusting arm to the 180° position

Model no.	Formula to Calculate Exerting Force
991-MRM	Max. Clamp Arm Exerting Force (lbs.) = 40 x Line Pressure (PSI) / Distance from Pivot Point to Clamping Point (in.)
1091-MRM	Max. Clamp Arm Exerting Force (lbs.) = 92.5 x Line Pressure (PSI) / Distance from Pivot Point to Clamping Point (in.)
Available upon request	

Models 991-MRM, 1091-MRM

Extreme Temperature Pneumatic Clamps

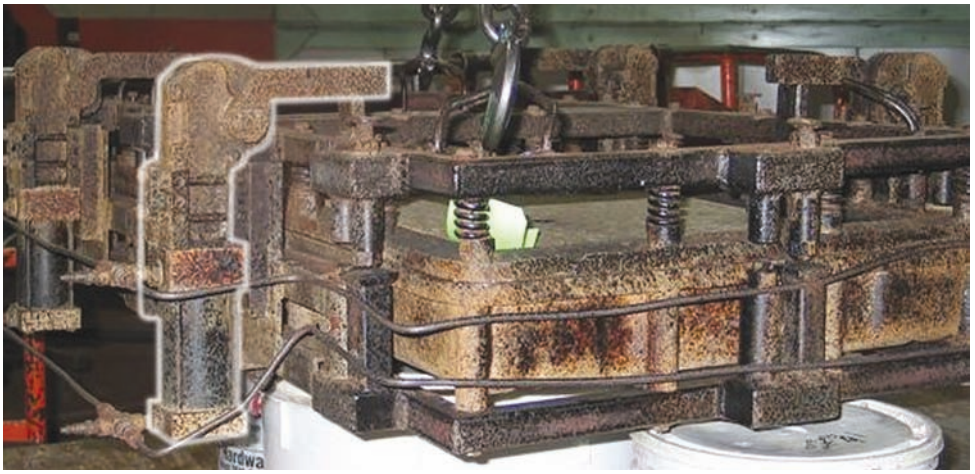

991 MRM clamps (4) used to clamp two mold halves together.

Clamp to be lubed with extreme temperature grease once per month of clamp service using standard grease fitting

Models
991-MRM
1091-MRM

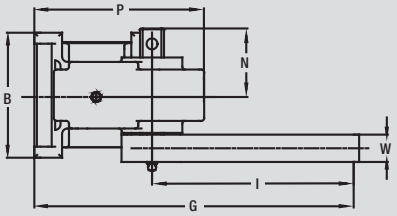

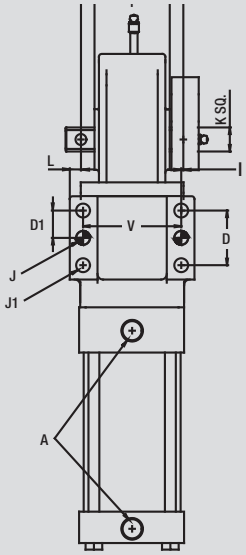

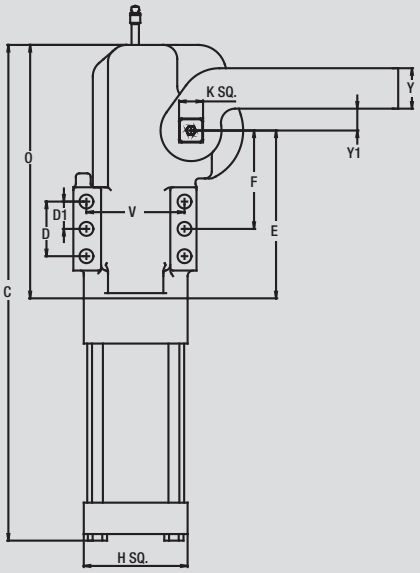

Model no.	A	B	C	D	D1	E	F	G	H	I	øJ	øJ1	K
991-MRM	3/8 G Port	86	376	35	17.5	123	76.2	225	76 Sq.	150	9.5	10.0	19
1091-MRM	1/2 G Port	116	448	51	25	153	90	293	95 Sq.	195	13	13.5	22

Available upon request

Model no.	L	M	N	O	P	T	U	V	W	Y	Y1
991-MRM	10	70	43	183	104	49	65	70	20	33	20
1091-MRM	10.2	94	61	232	156	68	90	90	25	37	20

Available upon request

Series 81L12, 81L16, 81L20, 81L25

NEW

- **Automation power clamps, miniature design**

Application:

Clamping, holding, gripping and positioning of metal sheets and other parts in jigs and handling systems.

Features:

- Compact design
- Long life cycle
- High holding torques
- Low weight (aluminium body)
- Four sizes, three cylinder-Ø
- Two mounting areas (front and rear)
- Toggle action mechanism
- The models can be quickly fitted with magnetic end position sensors.
- Model 81L20-101 interchangeable with 8820-2000000
- Model 81L25-101 interchangeable with 8825-1000000

81L12-10100

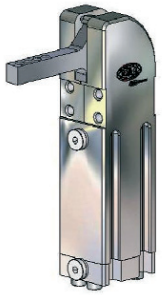

81L16-10100

81L20-10100

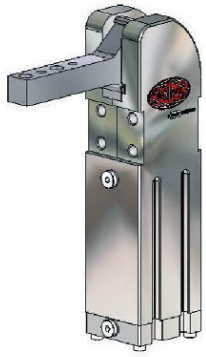

81L25-10100

Order code 81L..-2.....

Example Order no. 81L20 – 1 01 00

Models

81L12-10100

81L16-10100

81L20-10100

81L25-10100

81L12-14100

81L16-14100

81L20-14100

81L25-14100

Base model

01 = clamping arm, horizontal
(120° standard-opening angle)

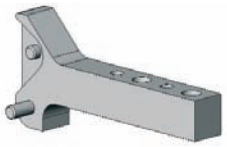

41 = clamping arm, vertikal
(90° standard-opening angle)

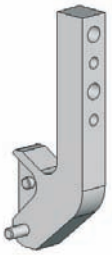

Clamping arms

00 =
Standard Design

Sensors

Model no.	Holding torque max. [in.–lbf.]	Clamping torque max. at 72 psig. [in.–lbf.]	Weight ~ [lbs.]	Air consumption per double stroke at 72 psig. [in³]	Max. additional weight at clamp arm mounted in position "X" [lbs.]
81L12-101_ _	221	39	0.4	15.3	0.11
81L12-141_ _	177	39	0.4	15.3	0.11
81L16-101_ _	531	53	0.6	16.5	0.18
81L16-141_ _	354	57	0.6	15.9	0.18
81L20-101_ _	885	159	1.1	24.4	0.20
81L20-141_ _	708	150	1.1	21.4	0.20
81L25-101_ _	885	159	1.2	24.4	0.22
81L25-141_ _	708	150	1.2	21.4	0.22

All values shown are in metric

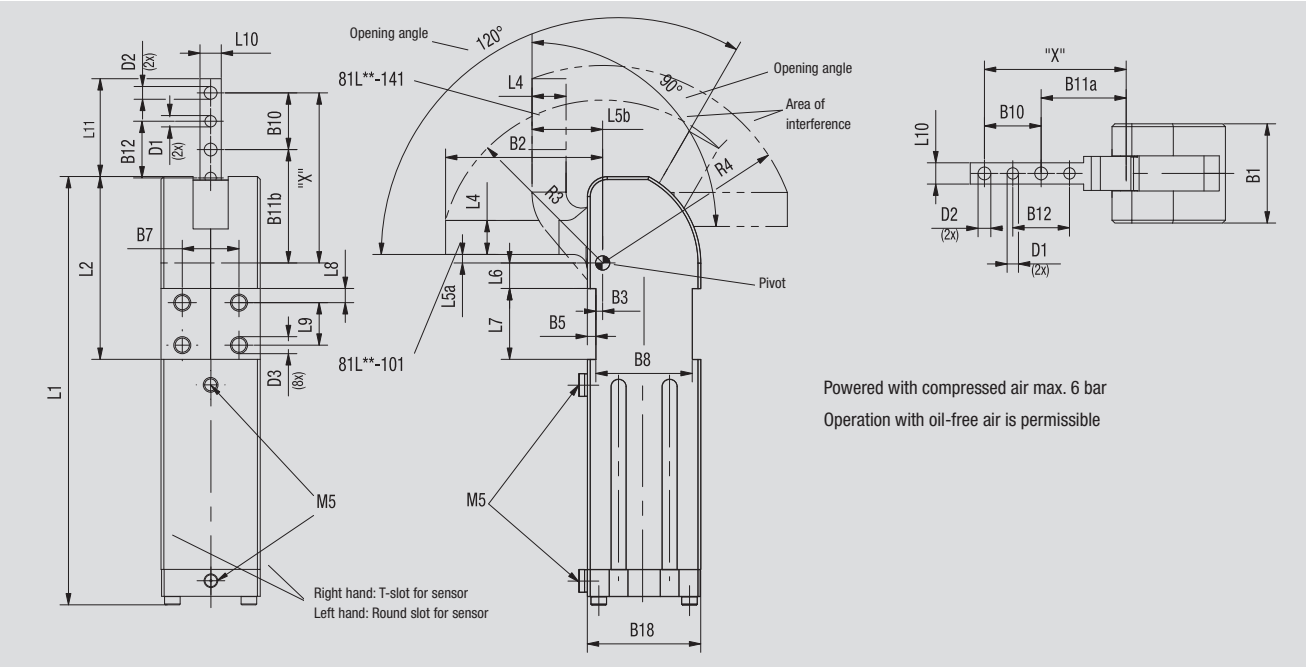

Technical data

Model no.	ØD1	ØD2	ØD3	B1	B2	B3	B5	B7	B8	B10	B11a	B11b	B12	B18	L1	L2	L4	L5a	L5b	L6	L7	L8	L9	L10	L11	R3	R4
	H7					±0,1	±0,2	±0,1	±0,1	±0,2					~						±0,1					~	~
81L12-101/-141	3	3,3	M4x6	24	40	2,5	1,5	15	25	9	27	31,5	9	28	104	40,5	7	2,5	17,5	4,5	15	3	9	6	23,5	41	48
81L16-101/-141	3	4,3	M5x5	30	50	2	2	20	26	15	30	39,5	15	30	119	49,5	9	2,25	20,5	5,75	20	4	12	8	35,75	51	63
81L20-101/-141	4	4,5	M6x8	35	55,5	2,5	3	20	34	20	30,5	40	20	40	151	64,5	12	3	25	9	25	5	15	7,5	34,5	57,5	70
81L25-101/-141	4	6,5	M6x8	35	65,5	2,5	3	20	34	20	40,5	50	20	40	151	64,5	12	3	25	9	25	5	15	12	44,5	67	79

All dimensions shown are in metric (mm).

Accessories

Specification	Order no.	Comment
Position sensor 	**SME-8F-DE**	Sensor, 3 wire cable, 2,5 cm open end
Position sensor 	**SME-8F-DE-S**	Sensor, with cable, connector M8x1, 3-pin
Adaptor 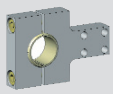	**82ZB-004-1**	Adaptor for mounting 81L20-1, 81L25-1 at tube system Ø25 mm

Additional sensors can be found on pages 13.2 and 13.3

Spare parts

Specification	Order no.	for clamp
Seal-Kit	**81L12-1-00**	**81L12-1**
	81L16-1-00	**81L16-1**
	81L20-1-00	**81L20-1, 81L25-1**

Pin assignment

SME-8F-DE

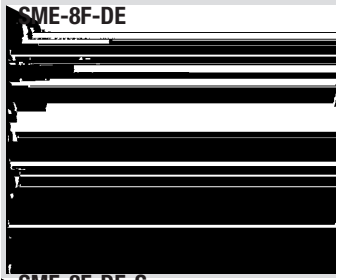

SME-8F-DE-S

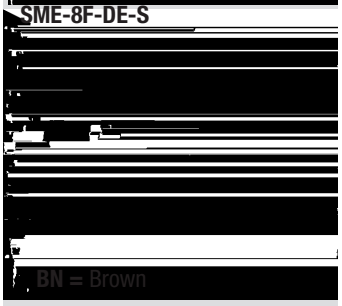

BN = Brown

BK = Black

BU = Blue

R L = Load

Automation power clamps, lightweight design

Clamp-family 82L-1 without manual handle option

82L25-1 without manual handle
page 14.15

82L32-1 without manual handle
page 14.18

82L40-1 without manual handle
page 14.18

Accessories
page 14.29

Clamp-family 82L-1 with manual handle option

82L25-1 with manual handle
page 14.27

82L32-1 with manual handle
page 14.27

82L40-1 with manual handle
page 14.27

Accessories
page 14.29

Automation power clamps, lightweight design

Modular system for lightweight automation power clamps

Models: **82L25-1....0.B** **82L25-1....H.B**
82L32-1....0.B **82L32-1....H.B**
82L40-1....0.B **82L40-1....H.B**

Procedure:

Select the base model (with or without manual handle)
Select the desired sensing option
Select the desired clamping arm
Assemble the components required to complete the assembly (only here will the clamp be fully configured and set up).

Benefits:

Faster delivery because standard models are in stock
Fewer part numbers for spare parts management
Improved flexibility of clamp configuration

82L... series
Base model without sensing option
and without clamping arm

Component	Description	Order number for series 82L25-1	82L32-1	82L40-1
Base model w/o clamping arm w/o sensing Standard opening Angle 96º	w/ manual handle	82L25-14300H0B	82L32-16300H0B	82L40-16300H0B
	w/o manual handle	82L25-1430000B	82L32-1630000B	82L40-1630000B
Clamping arm	On-center arm	8JG-075-3-0	8JG-065-2-0	8JG-067-2-01
		Dimensions see page		
		14.16, 14.17	14.20, 14.24	14.20, 14.24
	Offset single arm	N/A	8JG-066-1-01	8JG-068-1-01
Sensing system	M8 x 1, fixed (C8)	N/A	8EA-023-2	8EA-023-2
	M12 x 1, fixed (B7)	N/A	8EA-060-1	8EA-060-1
	M12 x 1, w/lead (B8)	8EA-033-2	N/A	N/A
	M12 x 1, w/lead (B8)	N/A	8EA-031-1	8EA-031-1
Opening angle stroke limiter	90º	8CE-216-1	8CE-096-1	8CE-196-1
	75º	8CE-213-1	8CE-093-1	8CE-193-1
	60º	8CE-211-1	8CE-091-1	8CE-191-1
	45º	8CE-209-1	8CE-089-1	8CE-189-1
	30º	8CE207-1	8CE-087-1	8CE187-1

82L25/32/40 Base models without clamping arm

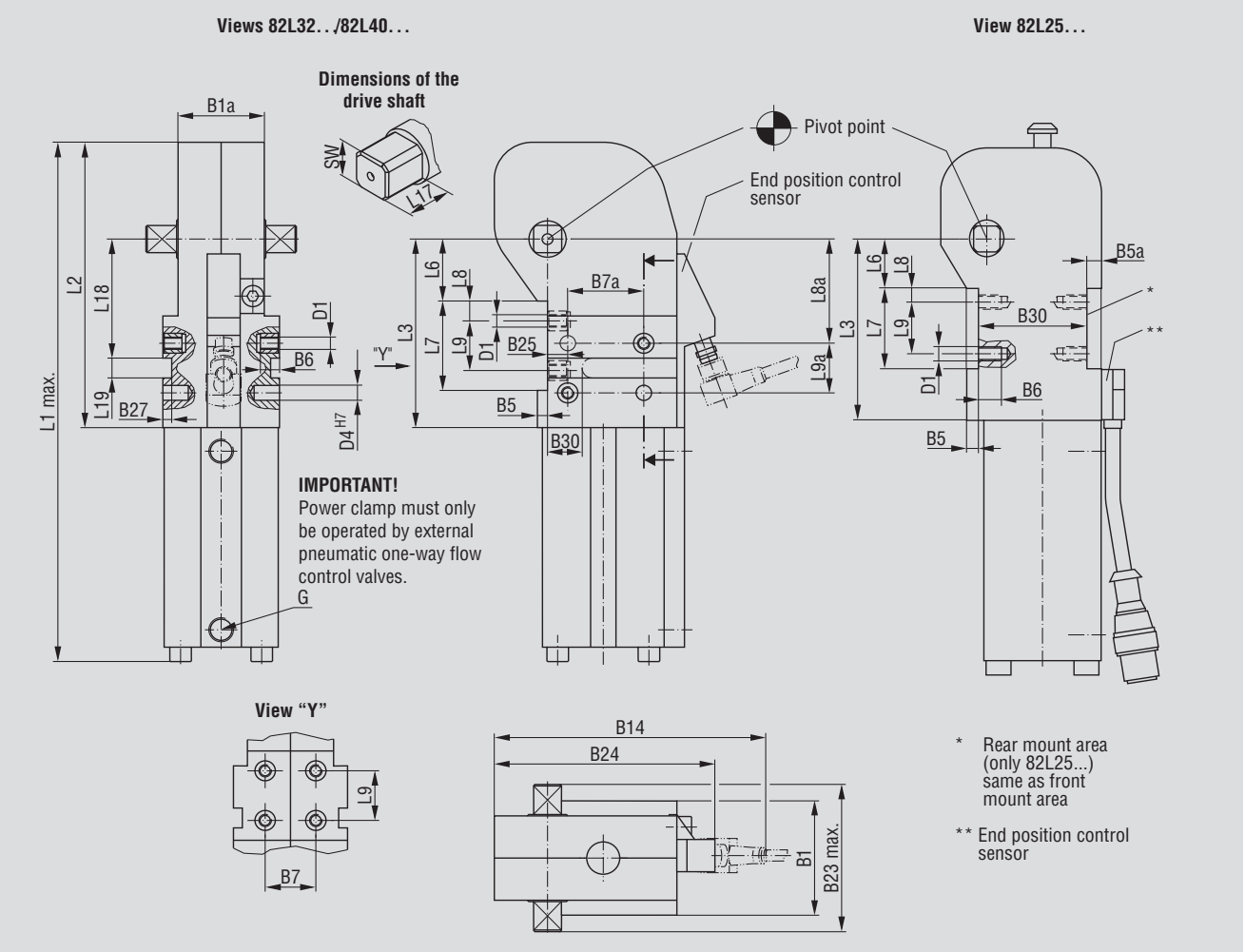

Technical data (see page 14.30 for additional dimensions of models with manual handle)

Base Model no.	Max. holding torque [in. lbf.]	Clamping torque at 74 PSI [in. lbf.]	= Piston Diameter	Max. operating angle	Weight [lbs.]	Port Connection G	B1	B1a -0,5	B5	B5a
82L25-1430000B 82L25-14300H0B	660	216	25	96º	2.2	G 1/8	35	35	4	5
82L32-1630000B 82L32-16300H0B	1,596	492	32	96º	3.3	G 1/8	46	34	4	–
82L40-1630000B 82L40-16300H0B	3,360	1,068	40	96º	4.84	G 1/8	40	40	6,5	–

Base Model no.	B6	B7 ±0,1	B7a ±0,1	B14	B23 max.	B24	B25 ±0,1	B27	B30	D1	D4 H7	L1 max.	L2 max.	L3	L6 ±0,05	L7 ±0,1	L8 ±0,1	L8a ±0,1	L9 ±0,1	L9a** ±0,1	L17	L18	L19 N9	SW h9
82L25-1430000B 82L25-14300H0B	8	25	–	–	53	63	–	–	37	M5	–	196	95	63	17	28	5	–	18	–	8,5	–	–	9
82L32-1630000B 82L32-16300H0B	7,5	20	30	107	60	87	8	3,5	–	M5	6	209	115	76	25	36	8	42	20	20	16	48	8	11
82L40-1630000B 82L40-16300H0B	8,5	25	35	117	74	97	9	3,5	12	M6	6	260	128	83	30	40	10	50	20	25	12,5	58,5	8	16

** Tolerance for distance to dowel hole ±0,02 All dimensions shown in metric (mm).

Series 82L25-1, 82L32-1, 82L40-1, (without manual handle)

Automation power clamps, lightweight design, enclosed model, without manual handle

Models: **82L25-1....0..**

Application:

Ideal for clamping, holding, gripping and positioning of sheet metal and other parts, mainly in jigs and part handling systems. Your best choice for carefully inserting the workpiece into the fixture are clamps with a manual handle option.

Key areas of application:

Application areas include automotive manufacturing, sheet metal processing industries and robotic welding.

Features:

- Enclosed body
- Dirt-resistant
- Compact design
- High holding capacities
- Long cycle life
- Low weight (aluminium body)
- Mounting areas at front and back
- Toggle action mechanism
- Manual unlocking in case of pressure drop
- Inductive sensing module (optional)

82L25-103B800
Horizontal clamped position

Model no.		Standard opening	Max. holding torque	Clamping torque at 74 PSI	Clamping Arm	Clamping Position	Cylinder Ø	Weight ~
w/o sensing	w/ sensing	angle	[in. lbf.]	[in. lbf.]				[lbs.]
82L25-1030000	82L25-103B800	105º	660	216	on-center	horizontal	25mm	2.2
82L25-1430000	82L25-143B800	96º	660	216	on-center	vertical	25mm	2.2

Concept guideline (with reference to axis of clamping arm rotation)

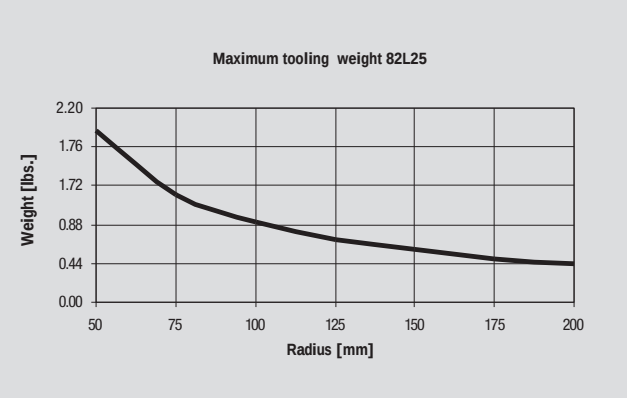

Diagram of Clamping Force for 82L25-1:
See page 14.20

All details apply under an air pressure of 88 PSI and opening and closure times of 1 second each.

82L25-103...

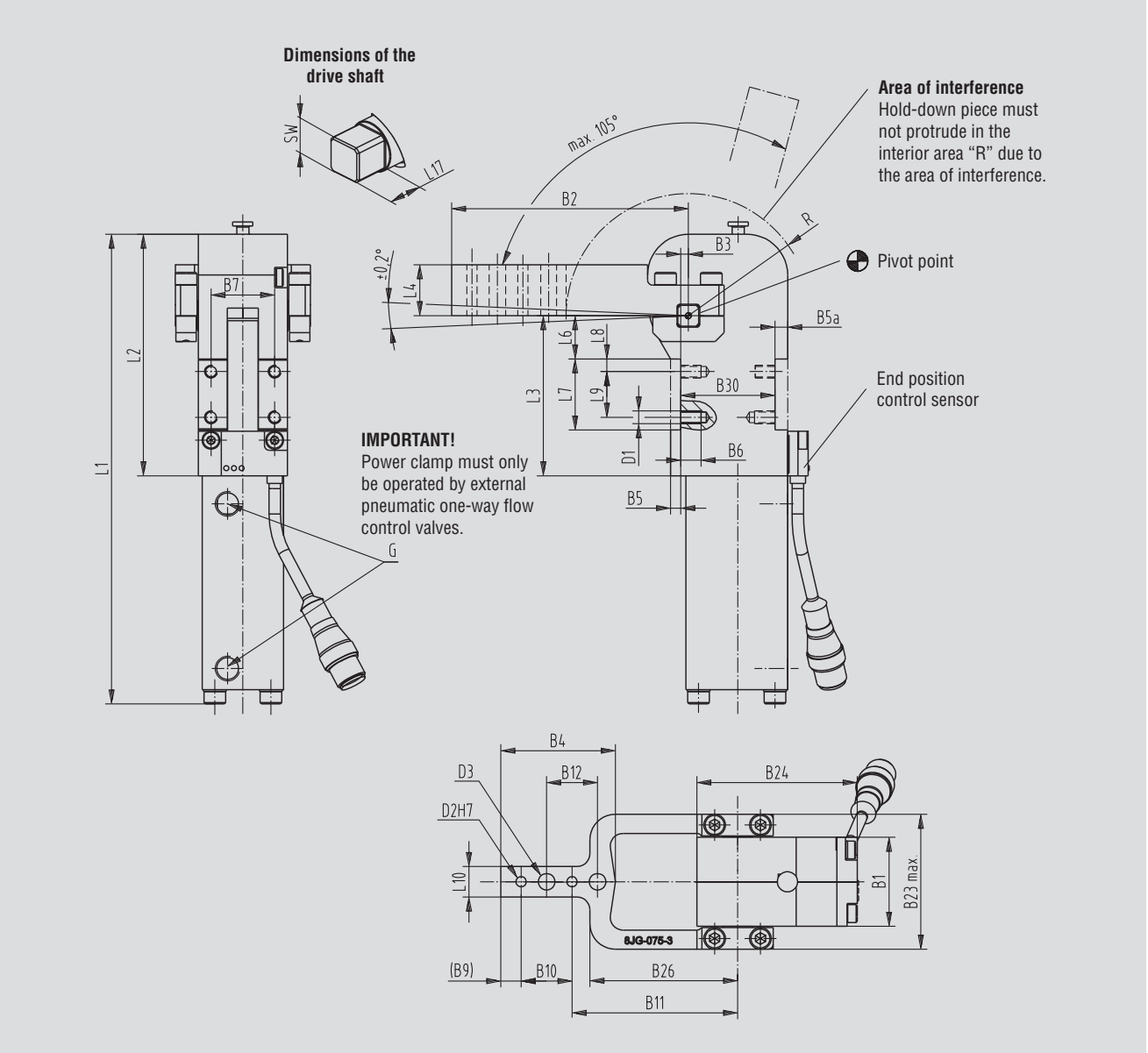

Technical data

Model no.	Standard opening angle	Clamping position	Port Connection G	B1	B2	B3 ±0,1	B4	B5	B5a	B6	B7 ±0,1	B9	B10 ±0,02	B11 +0,1	B12 ±0,2	
82L25-103_ _00	105°	horizontal	G 1/8	35	93	3	45	4	5	8	25	8	20	65	20	

Model no.	B23 max.	B24	B26	B30 ±0,1	D1	D2 H7 ø	D3 ø	L1 max.	L2	L3	L4 ±0,1	L6 ±0,05	L7 +0,1	L8 ±0,1	L9 ±0,1	L10	L17	R	SW h9
82L25-103_ _00	53	63	58	37	M5	4	6,5	185	95	63	20	17	28	5	18	12	8,5	48	9
Medium: air, max. 116 PSI																			

Operation with oil-free air is permissible. All dimensions shown in metric (mm).

Series 82L25-1, 82L32-1, 82L40-1, (without manual handle)

82L25-143...

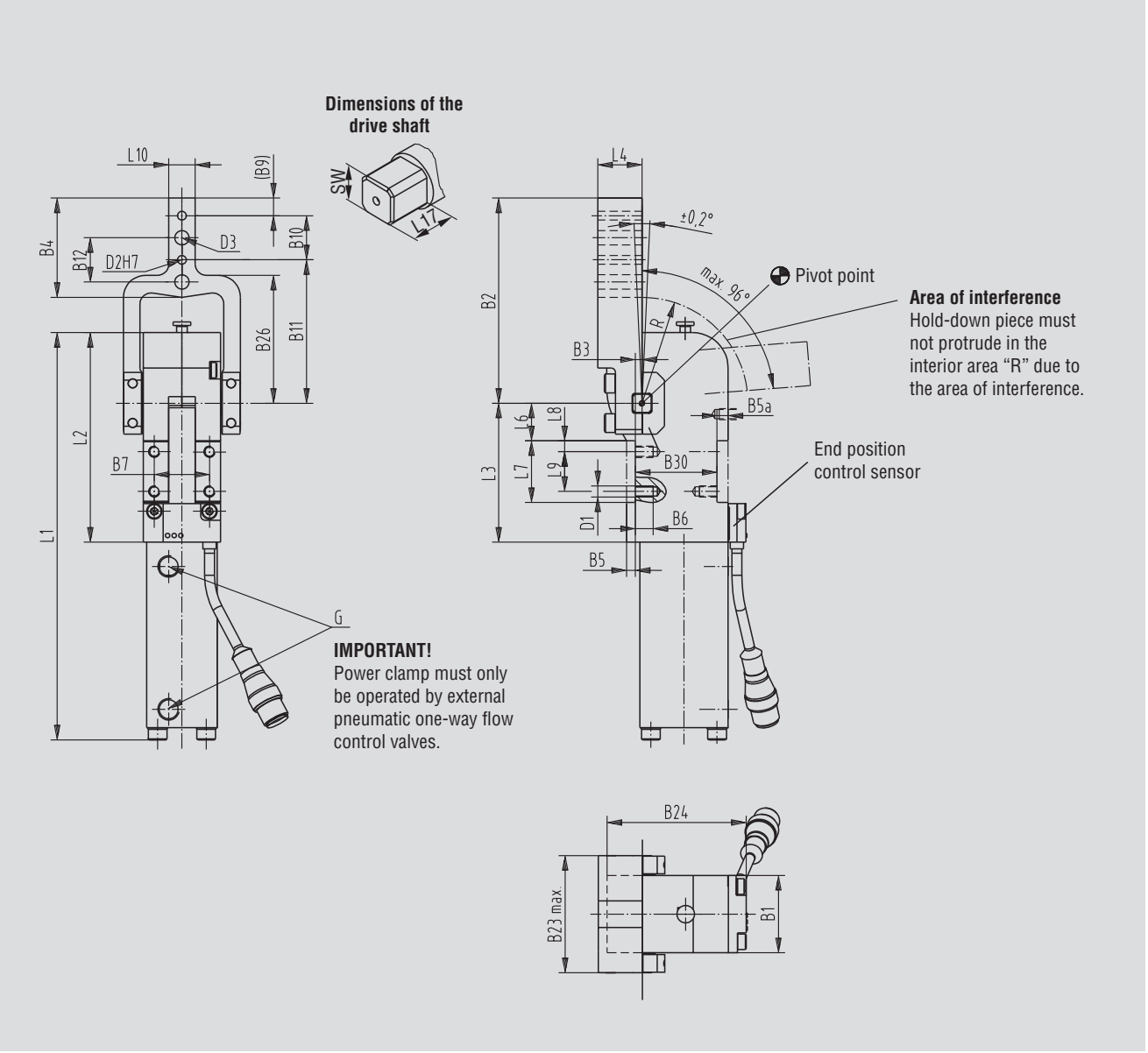

Technical data

Model no.	Standard opening angle	Clamping position	Port connection G	B1	B2	B3 ±0,1	B4	B5	B5a	B6	B7 ±0,1	B9	B10 ±0,02	B11 +0,1	B12 ±0,2	
82L25-143_ _00	96°	vertical	G 1/8	35	93	3	45	4	5	8	25	8	20	65	20	

Model no.	B23 max.	B24	B26	B30 ±0,1	D1	D2 H7 Ø	D3 Ø	L1 max.	L2	L3	L4 ±0,1	L6 ±0,05	L7 ±0,1	L8 ±0,1	L9 ±0,1	L10	L17	R	SW h9
82L25-103_ _00	53	63	58	37	M5	4	6,5	185	95	63	20	17	28	5	18	12	8,5	48	9

Medium: air, max. 116 PSI

Operation with oil-free air is permissible. All dimensions shown in metric (mm).

Automation power clamps, lightweight design, enclosed model, without manual handle

Models: **82L32-1....0..**
82L40-1....0..

82L40-103B700
Horizontal clamped position

82L32-103B800
Horizontal clamped position

Model no.				Standard opening angle	Max. holding torque [in. lbf.]	Clamping torque at 74 PSI [in. lbf.]	Clamping arm location	Clamping position	Cylinder Ø	Weight ~ [lbs.]
w/o sensing	w/ sensing									
	Connector M8 x 1, fixed	Connector M12 x 1, w/lead	Connector M12 x 1, fixed							
82L32-1030000	82L32-103C800	82L32-103B800	82L32-103B700	105º	1,596	492	on-center	horizontal	32	3.3
82L32-1430000	82L32-143C800	82L32-143B800	82L32-143B700	96º			on-center	vertical	32	3.3
82L32-1110000	82L32-111C800	82L32-111B800	82L32-111B700	105º			left	horizontal	32	3.3
82L32-1120000	82L32-112C800	82L32-112B800	82L32-112B700	105º			right	horizontal	32	3.3
82L32-1510000	82L32-151C800	82L32-151B800	82L32-151B700	96º			left	vertical	32	3.3
82L32-1520000	82L32-152C800	82L32-152B800	82L32-152B700	96º			right	vertical	32	3.3
82L32-1230000	82L32-123C800	82L32-123B800	82L32-123B700	105º			dual	horizontal	32	3.3
82L32-1630000	82L32-163C800	82L32-163B800	82L32-163B700	96º			dual	vertical	32	3.3
82L40-1030000	82L40-103C800	82L40-103B800	82L40-103B700	105º	3,360	1,068	on-center	horizontal	40	4.4
82L40-1430000	82L40-143C800	82L40-143B800	82L40-143B700	96º			on-center	vertical	40	4.4
82L40-1110000	82L40-111C800	82L40-111B800	82L40-111B700	105º			left	horizontal	40	4.4
82L40-1120000	82L40-112C800	82L40-112B800	82L40-112B700	105º			right	horizontal	40	4.4
82L40-1510000	82L40-151C800	82L40-151B800	82L40-151B700	96º			left	vertical	40	4.4
82L40-1520000	82L40-152C800	82L40-152B800	82L40-152B700	96º			right	vertical	40	4.4
82L40-1230000	82L40-123C800	82L40-123B800	82L40-123B700	105º			dual	horizontal	40	4.4
82L40-1630000	82L40-163C800	82L40-163B800	82L40-163B700	96º			dual	vertical	40	4.4

Sensing options for 82L32-1... and 82L40-1...

B8 connecting plug
M12x1 with lead

B7 connecting plug
M12x1

C8 connecting plug
M8x1

Series 82L25-1, 82L32-1, 82L40-1, (without manual handle)

Dimensions

Model no.	Standard opening angle	Clamping arm position	Clamping position	Piston Ø	Port connection	B1	B1a -0,5	B2	B4	B5	B6	B7 ±0,1	B7a[1] ±0,1
82L32-103_ _00	105º	on-center	horizontal	32	G 1/8	46	34	105	45	4	7,5	20	30
82L40-103_ _00	105º	on-center	horizontal	40	G 1/4	40	40	110	45	6,5	8,5	25	35

Model no.	B9	B10 ±0,02	B11 +0,1	B12 ±0,02	B14	B23 max.	B24	B25 +0,1	B26	B27	B30	D1	D2 H7 Ø	D3	D4 H7 Ø	L1 max.	L2 max.	L3	L4 ±0,1	L6 ±0,05
82L32-103_ _00	6	20	79	20	104	54	87	8	68,5	3,5	–	M5	6	7	6	209	115	76	20	25
82L40-103_ _00	6	20	84	20	107	65	97	9	75	3,5	12	M6	6	7	6	260	128	83	22	30

Model no.	L7 +0,1	L8 ±0,1	L8a ±0,1	L9 ±0,1	L9a[1] ±0,1	L10 -0,1	L17	L18	L19 N9	R	SW h9
82L32-103_ _00	36	8	42	20	20	12	9,5	48	8	60	11
82L40-103_ _00	40	10	50	20	25	15	11	58,5	8	65	16

Medium: air, max.116 PSI, operation with oil-free air is permissible. All dimensions shown in metric (mm).

[1] Tolerance for distance to dowel hole ±0,02

Concept guideline (with reference to axis of clamping arm rotation)

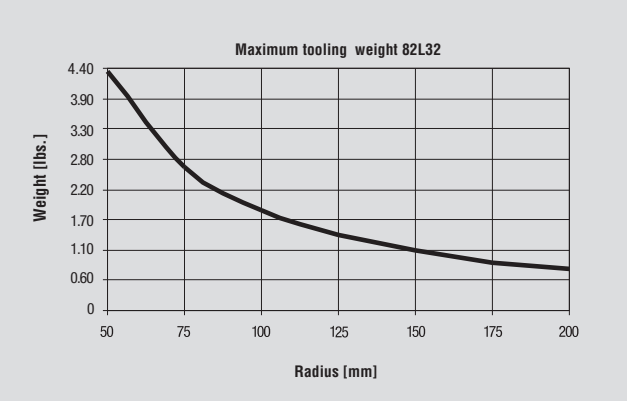

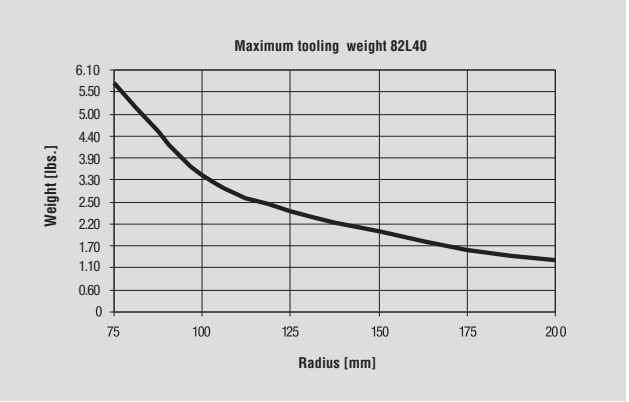

All details apply under an air pressure of 88 PSI and opening and closure times of 1 second each.

82L32/40-103...

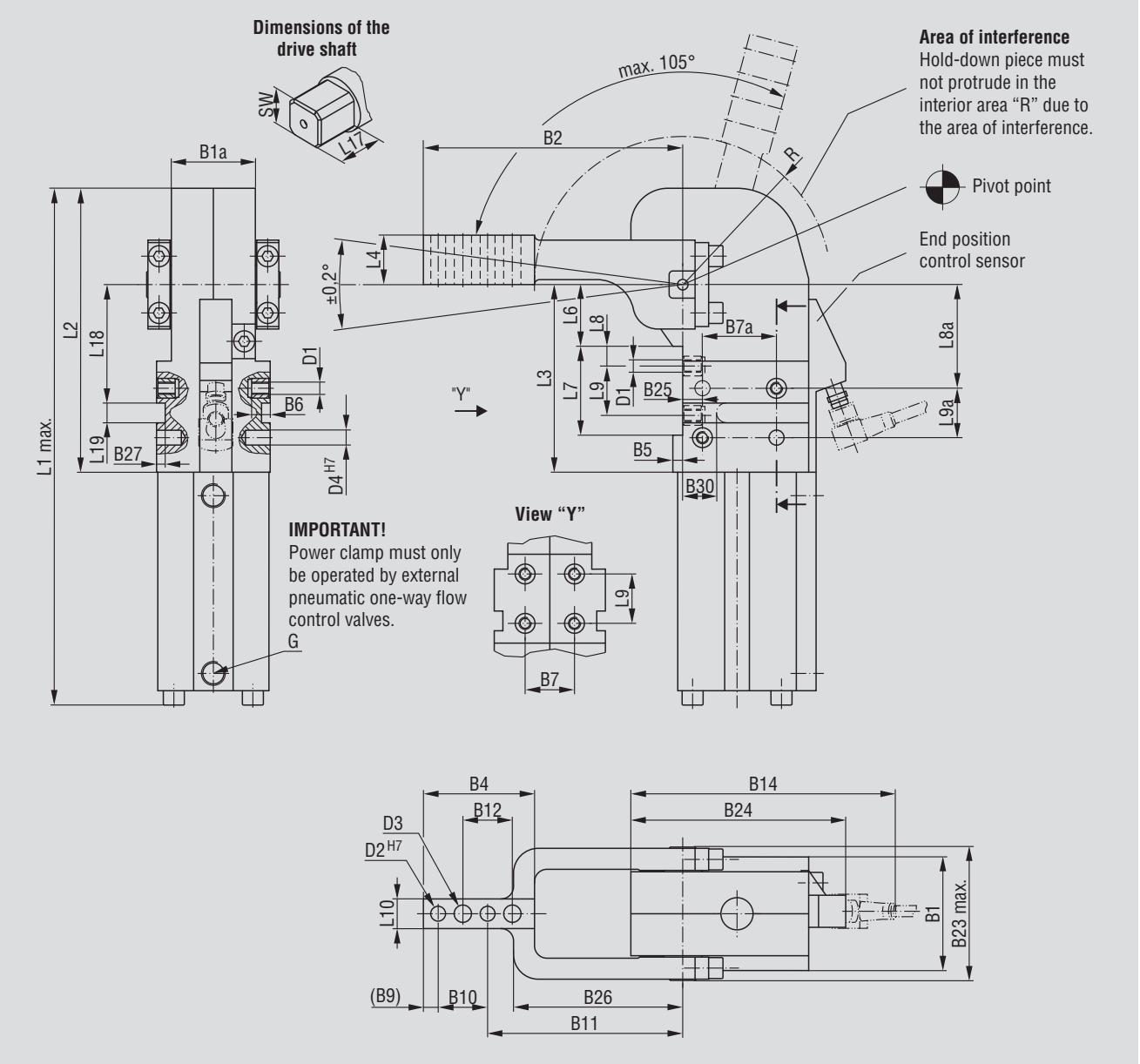

Diagram of Clamping Force (at 74 PSI)

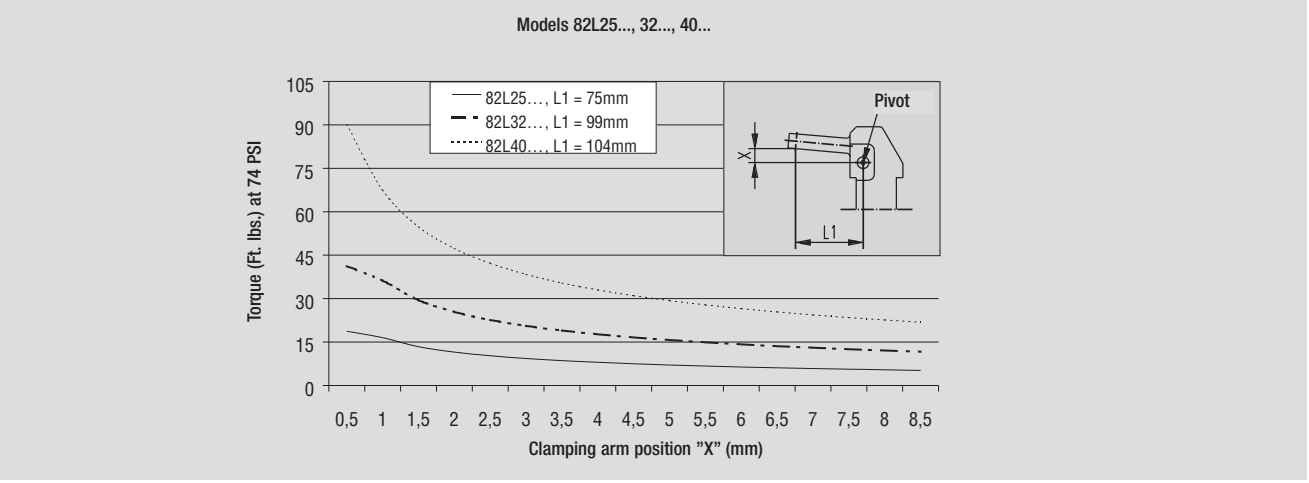

Series 82L25-1, 82L32-1, 82L40-1, (without manual handle)

Technical data

Model no.	Standard opening angle	Clamping arm location	Clamping position	Piston Ø	Port connection	B1	B1a -0,5	B2	B4	B5	B6	B7 ±0,1	B7a[1] ±0,1
82L32-143_ _00	96°	on-center	vertical	32	G 1/8	46	34	105	45	4	7,5	20	30
82L40-143_ _00	96°	on-center	vertical	40	G 1/4	40	40	110	45	6,5	8,5	25	35

Model no.	B9	B10 ±0,02	B11 +0,1	B12 ±0,02	B14	B23 max.	B24	B25 +0,1	B26	B27	B30	D1	D2 H7 Ø	D3	D4 H7 Ø	L1 max.	L2 max.	L3	L4 ±0,1	L6 ±0,05
82L32-143_ _00	6	20	79	20	107	54	87	8	68,5	3,5	–	M5	6	7	6	209	115	76	20	25
82L40-143_ _00	6	20	84	20	117	65	97	9	75	3,5	12	M6	6	7	6	260	128	83	22	30

Model no.	L7 +0,1	L8 ±0,1	L8a ±0,1	L9 ±0,1	L9a[1] ±0,1	L10	L17	L18	L19 N9	R	SW h9
82L32-143_ _00	36	8	42	20	20	12	9,5	48	8	60	11
82L40-143_ _00	40	10	50	20	25	15	11	58,5	8	65	16

Medium: air, max. 116 PSI, operation with oil-free air is permissible. All dimensions shown in metric (mm).

[1] Tolerance for distance to dowel hole ±0,02

Concept guideline (with reference to axis of clamping arm rotation)

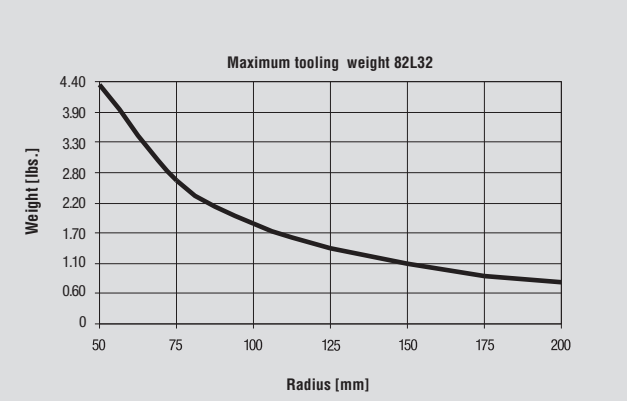

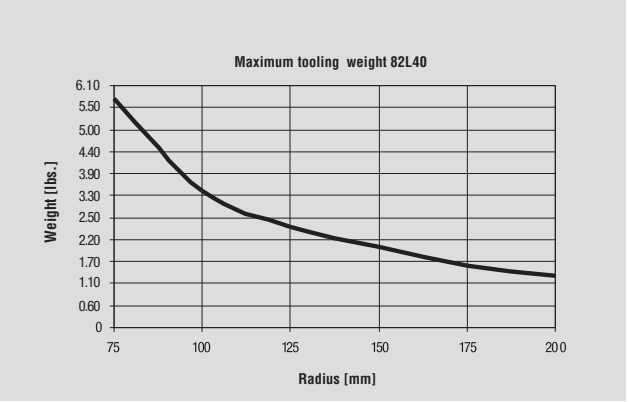

All details apply under an air pressure of 88 PSI and opening and closure times of 1 second each.

82L32/40-143...

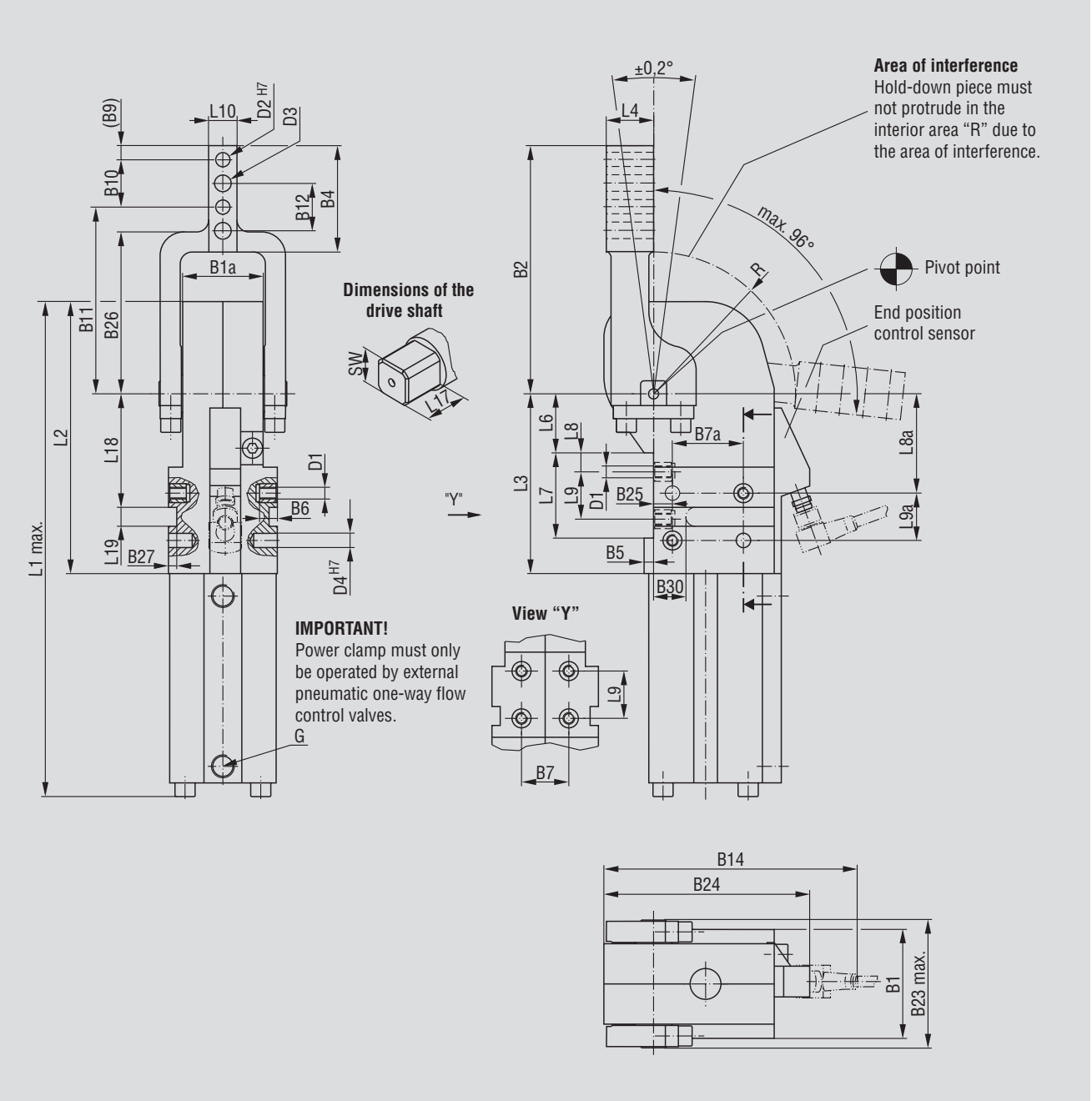
Area of interference
Hold-down piece must not protrude in the interior area "R" due to the area of interference.
Pivot point
End position control sensor
Dimensions of the drive shaft
IMPORTANT!
Power clamp must only be operated by external pneumatic one-way flow control valves.
View "Y"
max. 96°
±0,2°
L1 max.
L2
L3
L4
L6
L7
L8
L8a
L9
L9a
L10
L17
L18
L19
B1
B1a
B2
B4
B5
B6
B7
B7a
B9
B10
B11
B12
B14
B23 max.
B24
B25
B26
B27
B30
D1
D2 H7
D3
D4 H7
SW
R
G
"Y"

Series 82L25-1, 82L32-1, 82L40-1, (without manual handle)

Technical data

Model no.	Standard opening angle	Clamping arm location	Clamping position	Piston Ø	Port connection	B1	B1a -0,5	B2	B4	B5	B6	B7 ±0,1	B7a[1] ±0,1
82L32-111_ _00	105º	left	horizontal	32	G 1/8	46	34	105	45	4	7,5	20	30
82L32-112_ _00	105º	right	horizontal	32	G 1/8	46	34	105	45	4	7,5	20	30
82L32-123_ _00	105º	both	horizontal	32	G 1/8	46	34	105	45	4	7,5	20	30
82L40-111_ _00	105º	left	horizontal	40	G 1/4	40	40	92	45	6,5	8,5	25	35
82L40-112_ _00	105º	right	horizontal	40	G 1/4	40	40	92	45	6,5	8,5	25	35
82L40-123_ _00	105º	both	horizontal	40	G 1/4	40	40	92	45	6,5	8,5	25	35

Model no.	B9	B10 ±0,02	B11 +0,1	B12 ±0,02	B14	B22	B23 max.	B24	B25 +0,1	B27	B30	D1	D2 H7 Ø	D3	D4 H7 Ø	L1 max.	L2 max.	L3	L4 ±0,1	L6 ±0,05
82L32-111_ _00	6	20	79	20	107	0,5	53	87	8	3,5	–	M5	6	7	6	209	115	76	20	25
82L32-112_ _00	6	20	79	20	107	0,5	53	87	8	3,5	–	M5	6	7	6	209	115	76	20	25
82L32-123_ _00	6	20	79	20	107	0,5	53	87	8	3,5	–	M5	6	7	6	209	115	76	20	25
82L40-111_ _00	6	20	84	20	117	0,5	57	97	9	3,5	12	M6	6	7	6	260	128	83	22	30
82L40-112_ _00	6	20	84	20	117	0,5	57	97	9	3,5	12	M6	6	7	6	260	128	83	22	30
82L40-123_ _00	6	20	84	20	117	0,5	57	97	9	3,5	12	M6	6	7	6	260	128	83	22	30

Model no.	L7 +0,1	L8 ±0,1	L8a ±0,1	L9 ±0,1	L9a[1] ±0,1	L10 -0,1	L17	L18	L19 N9	R	SW h9
82L32-111_ _00	36	8	42	20	20	12	12,5	48	8	60	11
82L32-112_ _00	36	8	42	20	20	12	12,5	48	8	60	11
82L32-123_ _00	36	8	42	20	20	12	12,5	48	8	60	11
82L40-111_ _00	40	10	50	20	25	15	16	58,5	8	65	16
82L40-112_ _00	40	10	50	20	25	15	16	58,5	8	65	16
82L40-123_ _00	40	10	50	20	25	15	16	58,5	8	65	16

Medium: air, max. 116 PSI, operation with oil-free air is permissible. All dimensions shown in metric (mm).

[1] Tolerance for distance to dowel hole ±0,02

82L32/40-111../-112../-123..

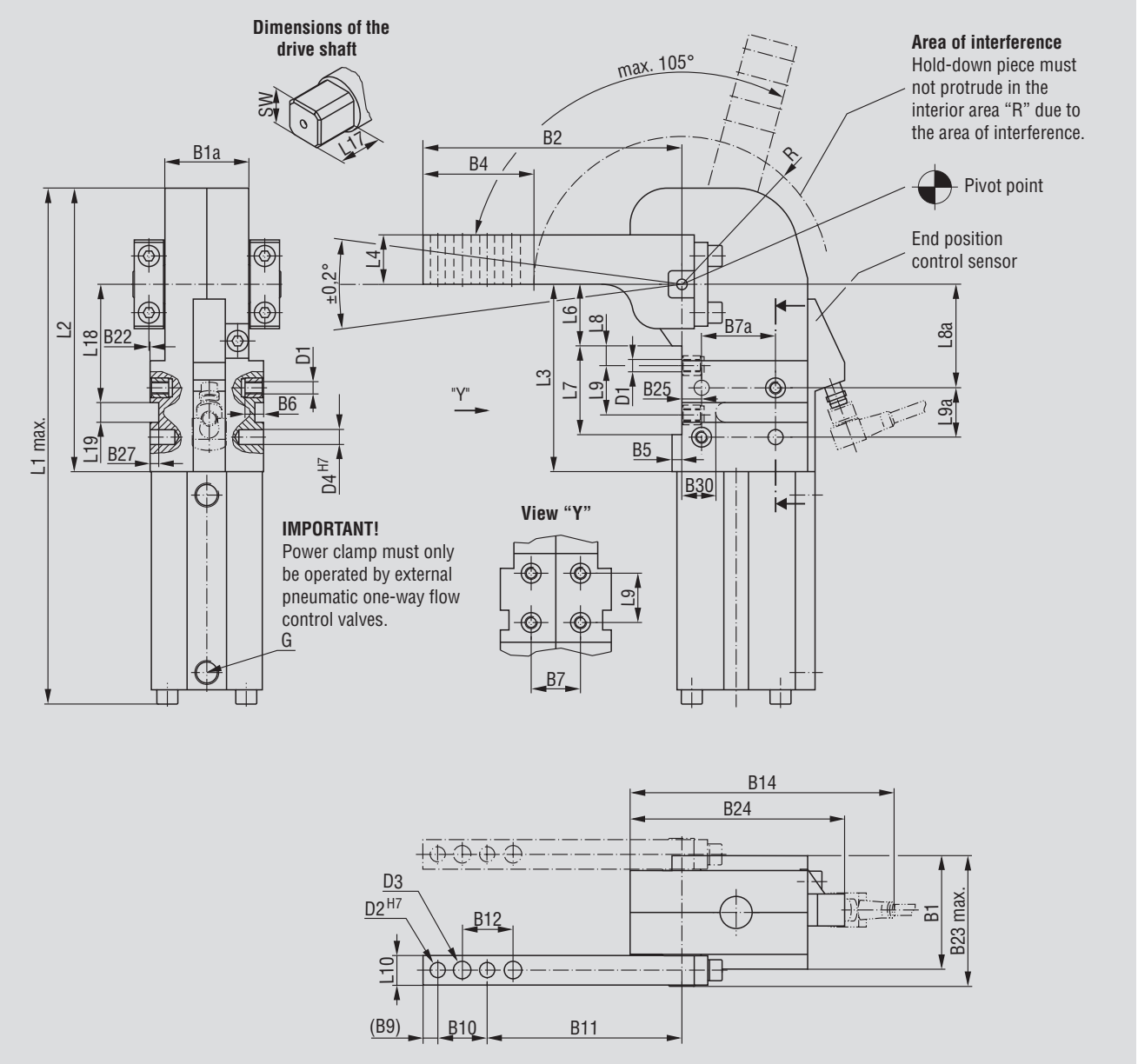

Concept guideline (with reference to axis of clamping arm rotation)

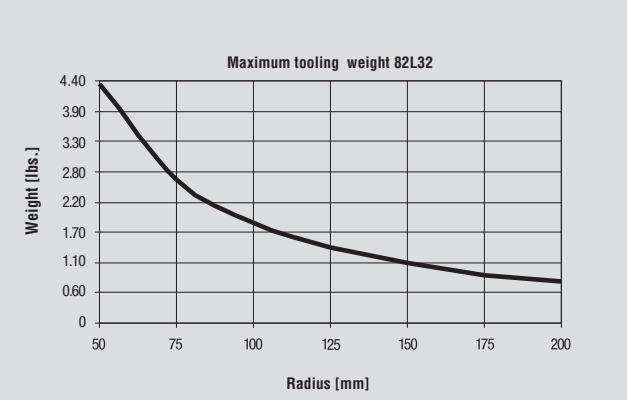

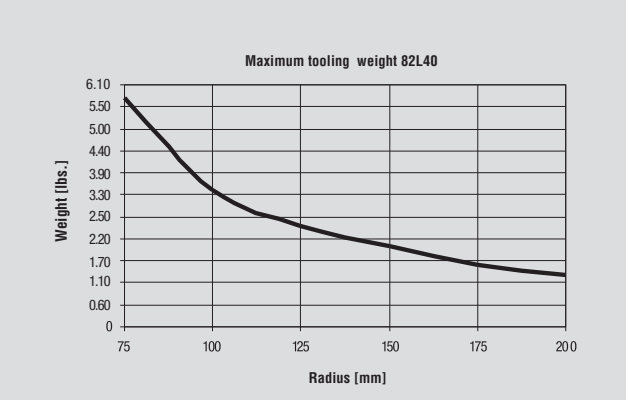

All details apply under an air pressure of 88 PSI and opening and closure times of 1 second each.

Series 82L25-1, 82L32-1, 82L40-1, (without manual handle)

Technical data

Model no.	Standard opening angle	Clamping arm location	Clamping position	Piston Ø	Port connection	B1	B1a -0,5	B2	B4	B5	B6	B7 ±0,1	B7a[1] ±0,1
82L32-151_ _00	96º	left	vertical	32	G 1/8	46	34	105	45	4	7,5	20	30
82L32-152_ _00	96º	right	vertical	32	G 1/8	46	34	105	45	4	7,5	20	30
82L32-163_ _00	96º	both	vertical	32	G 1/8	46	34	105	45	4	7,5	20	30
82L40-151_ _00	96º	left	vertical	40	G 1/4	40	40	92	45	6,5	8,5	25	35
82L40-152_ _00	96º	right	vertical	40	G 1/4	40	40	92	45	6,5	8,5	25	35
82L40-163_ _00	96º	both	vertical	40	G 1/4	40	40	92	45	6,5	8,5	25	35

Model no.	B9	B10 ±0,02	B11 +0,1	B12 ±0,02	B14	B22	B23 max.	B24	B25 +0,1	B27	B30	D1	D2 H7 Ø	D3	D4 H7 Ø	L1 max.	L2 max.	L3	L4 ±0,1	L6 ±0,05
82L32-151_ _00	6	20	79	20	107	0,5	53	87	8	3,5	–	M5	6	7	6	209	115	76	20	25
82L32-152_ _00	6	20	79	20	107	0,5	53	87	8	3,5	–	M5	6	7	6	209	115	76	20	25
82L32-163_ _00	6	20	79	20	107	0,5	53	87	8	3,5	–	M5	6	7	6	209	115	76	20	25
82L40-151_ _00	6	20	84	20	117	8,5	57	97	9	3,5	12	M6	6	7	6	260	128	83	22	30
82L40-152_ _00	6	20	84	20	117	8,5	57	97	9	3,5	12	M6	6	7	6	260	128	83	22	30
82L40-163_ _00	6	20	84	20	117	8,5	57	97	9	3,5	12	M6	6	7	6	260	128	83	22	30

Model no.	L7 +0,1	L8 ±0,1	L8a ±0,1	L9 ±0,1	L9a[1] ±0,1	L10 -0,1	L17	L18	L19 N9	R	SW h9
82L32-151_ _00	36	8	42	20	20	12	12,5	48	8	60	11
82L32-152_ _00	36	8	42	20	20	12	12,5	48	8	60	11
82L32-163_ _00	36	8	42	20	20	12	12,5	48	8	60	11
82L40-151_ _00	40	10	50	20	25	15	16	58,5	8	65	16
82L40-152_ _00	40	10	50	20	25	15	16	58,5	8	65	16
82L40-163_ _00	40	10	50	20	25	15	16	58,5	8	65	16

Medium: air, max. 116 PSI, operation with oil-free air is permissible. All dimensions shown in metric (mm).

[1)] Tolerance for distance to dowel hole ±0,02

82L32/40-151../-152../-163..

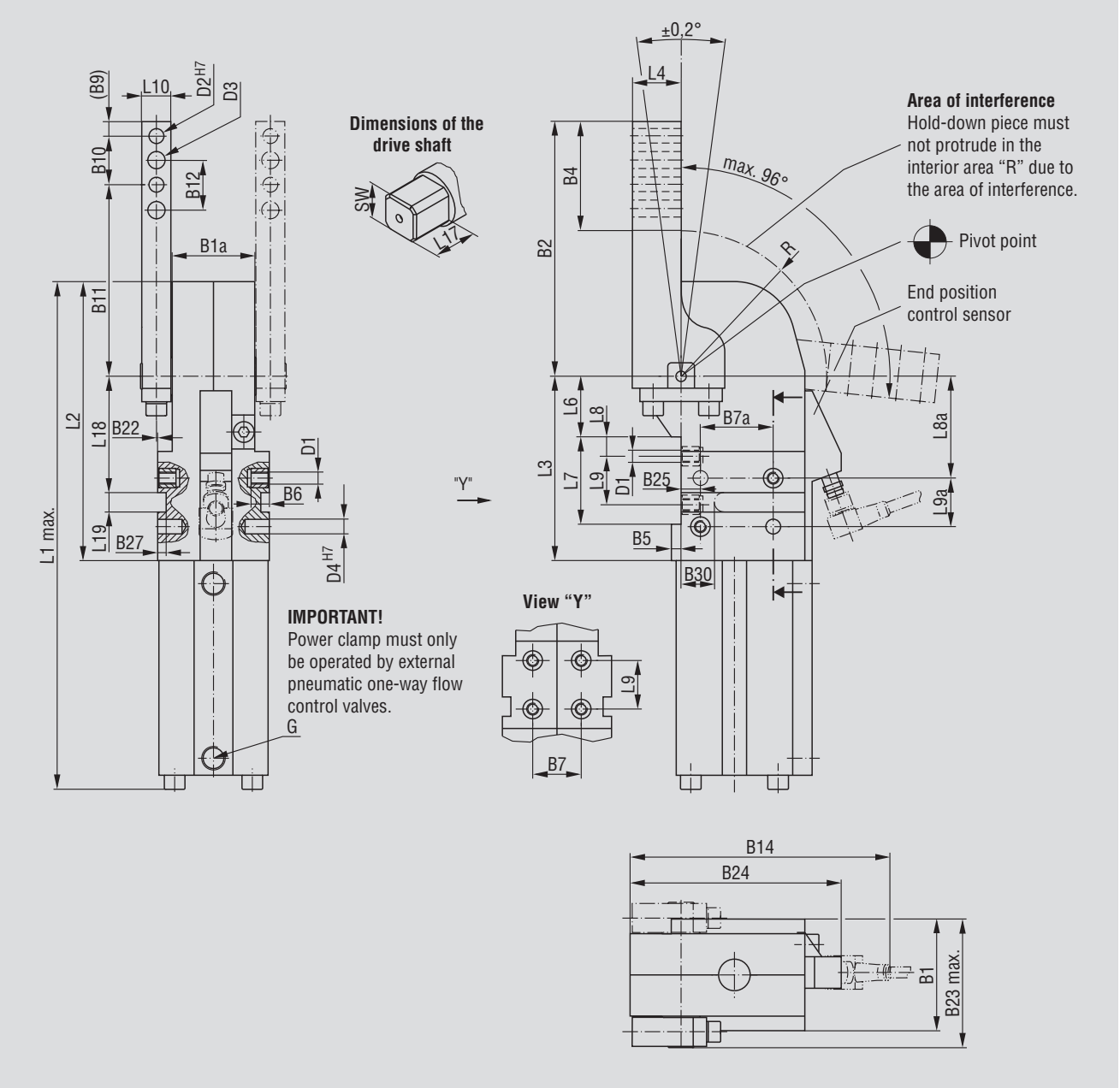

Concept guideline (with reference to axis of clamping arm rotation)

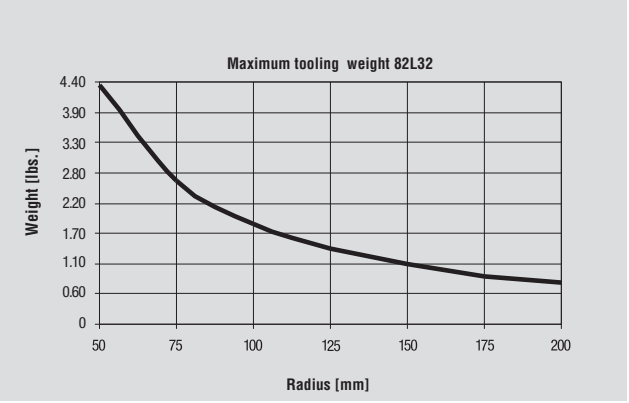

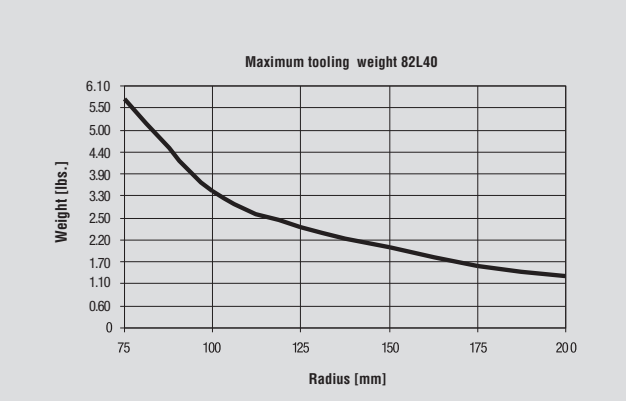

All details apply under an air pressure of 88 PSI and opening and closure times of 1 second each.

Series 82L25-1, 82L32-1, 82L40-1, (with manual handle)

Automation power clamps, lightweight design, enclosed model, with manual handle

Models: **82L25-1....H..**
82L32-1....H..
82L40-1....H..

82L25-10300H0

82L32-103C8H0

82L40-10300H0

Model no.				Standard opening angle	Max. holding torque [in. lbf.]	Clamping torque at 74 PSI [in. lbf.]	Clamping arm location	Clamping position	Cylinder Ø	Weight ~ [lbs.]
w/o sensing	w/ sensing Connector M8 x 1, fixed	w/ sensing Connector M12 x 1, w/lead	w/ sensing Connector M12 x 1, fixed							
82L25-10300H0	–	82L25-103B8H0	–	105º	660	216	on-center	horizontal	25	2.6
82L25-14300H0	–	82L25-143B8H0	–	96º	660	216	on-center	vertical	25	2.6
82L32-10300H0	82L32-103C8H0	82L32-103B8H0	82L32-103B7H0	105º	1,596	492	on-center	horizontal	32	3.75
82L32-14300H0	82L32-143C8H0	82L32-143B8H0	82L32-143B7H0	96º			on-center	vertical	32	3.75
82L32-11100H0	82L32-111C8H0	82L32-111B8H0	82L32-111B7H0	105º			left	horizontal	32	3.75
82L32-11200H0	82L32-112C8H0	82L32-112B8H0	82L32-112B7H0	105º			right	horizontal	32	3.75
82L32-15100H0	82L32-151C8H0	82L32-151B8H0	82L32-151B7H0	96º			left	vertical	32	3.75
82L32-15200H0	82L32-152C8H0	82L32-152B8H0	82L32-152B7H0	96º			right	vertical	32	3.75
82L32-12300H0	82L32-123C8H0	82L32-123B8H0	82L32-123B7H0	105º			both	horizontal	32	3.75
82L32-16300H0	82L32-163C8H0	82L32-163B8H0	82L32-163B7H0	96º			both	vertical	32	3.75
82L40-10300H0	82L40-103C8H0	82L40-103B8H0	82L40-103B7H0	105º	3,360	1,068	on-center	horizontal	40	4.84
82L40-14300H0	82L40-143C8H0	82L40-143B8H0	82L40-143B7H0	96º			on-center	vertical	40	4.84
82L40-11100H0	82L40-111C8H0	82L40-111B8H0	82L40-111B7H0	105º			left	horizontal	40	4.84
82L40-11200H0	82L40-112C8H0	82L40-112B8H0	82L40-112B7H0	105º			right	horizontal	40	4.84
82L40-15100H0	82L40-151C8H0	82L40-151B8H0	82L40-151B7H0	96º			left	vertical	40	4.84
82L40-15200H0	82L40-152C8H0	82L40-152B8H0	82L40-152B7H0	96º			right	vertical	40	4.84
82L40-12300H0	82L40-123C8H0	82L40-123B8H0	82L40-123B7H0	105º			both	horizontal	40	4.84
82L40-16300H0	82L40-163C8H0	82L40-163B8H0	82L40-163B7H0	96º			both	vertical	40	4.84

82L25/32/40 with manual handle, additional dimensions

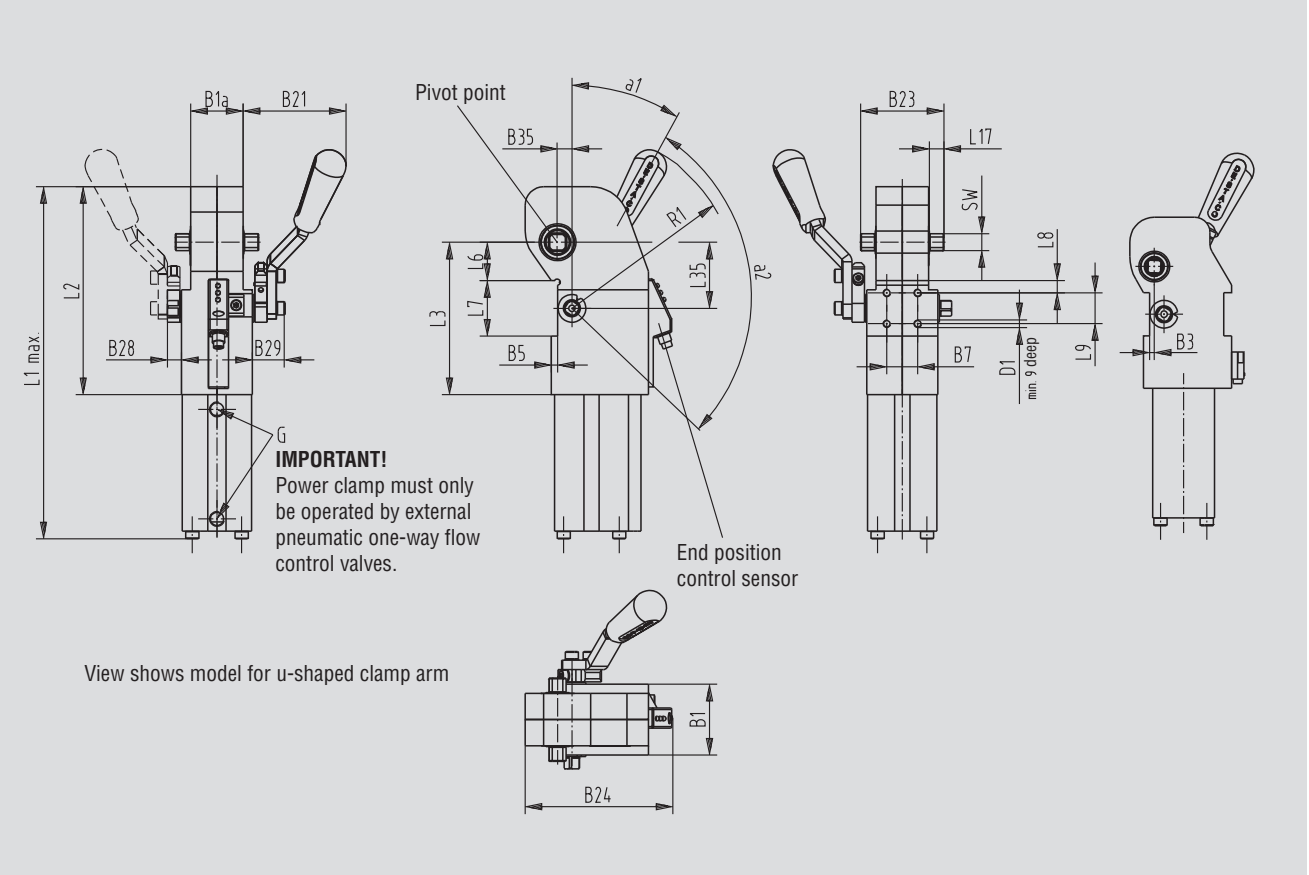

Technical data (additional dimensions for models with hand lever)

Model no.	Cylinder Ø	Port connector G	B1	B1a -0,5	B3 ±0,1	B5	B7 ±0,1	B21 ~	B23	B24 ~	B28	B29	B35
82L25-1_ _ _H_	25	G 1/8	35	35	3	4	25	63	53	75	9	21	6,3
82L32-1_ _ _H_	32	G 1/8	46	34	–	4	20	69	54	96	9	21	9,3
82L40-1_ _ _H_	40	G 1/4	40	40	–	6,5	25	63	64	113	9	21	10,3

Model no.	D1	L1 max.	L2	L3	L6 ±0,05	L7 +0,1	L8 ±0,1	L9 ±0,1	L17	L35	R1	SW h9	a1	a2
82L25-1_ _ _H_	M5	200	11	79	17	28	5	18	8,5	31	122	9	32°	113°
82L32-1_ _ _H_	M5	229	135	99	25	36	8	20	9,5	43	122	11	33.5°	108.5°
82L40-1_ _ _H_	M6	274	142	97	30	40	10	20	11	50	122	16	27°	87°

All dimensions shown in metric (mm).

Series 82L25-1, 82L32-1, 82L40-1, (with and without manual handle)

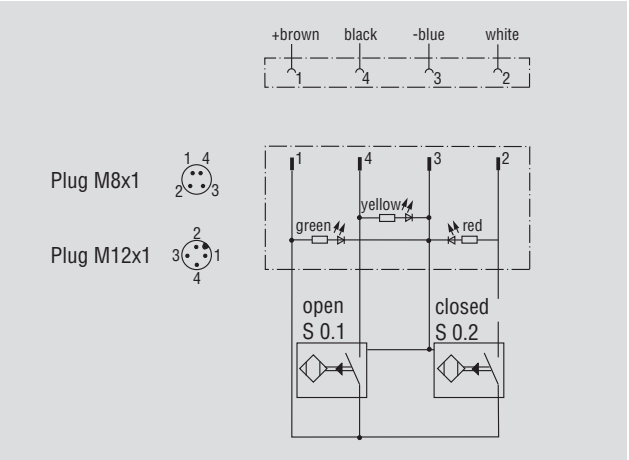

Wiring diagram for electrical sensing system

Sensing system immune to interference from DC arc welding and AC arc welding.

Inductive version: C8, B7, B8

Pin assignment

Model No. Code for 82L..-1.....

Example Model No.: 82L32 – 1 03 B7 H 0 B

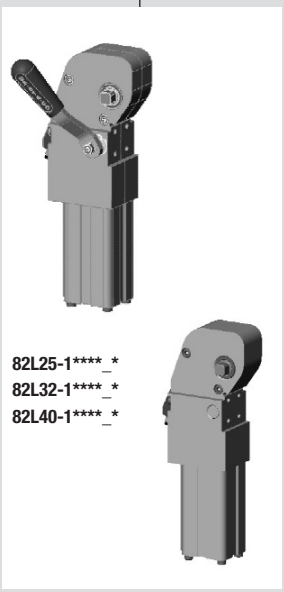

82L25-1****_*
82L32-1****_*
82L40-1****_*

Base Models

** 105° standard opening angle
* 96° standard opening angle

03 = U-shaped clamp arm ** central 90°

43 = U-shaped clamp arm * central 180°

11 = lateral clamp arm ** 90°, mounted on the left

12 = lateral clamp arm ** 90°, mounted on the right

51 = lateral clamp arm * 180°, mounted on the left

52 = lateral clamp arm * 180°, mounted on the right

23 = lateral clamp arm ** 90°, mounted on both sides

63 = lateral clamp arm * 180°, mounted on both sides

Clamp Arms

00 = without sensing cover plate 8AB-041-1

C8 = with sensing 8EA-023-1 P&F M8x1 for 82L32+82L40

B7 = with sensing 8EA-060-1 P&F M12x1 for 82L32+82L40

B8 = with sensing 8EA-031-1 P&F M12x1 for 82L32+82L40

B8 = with sensing 8EA-033-1 Turck for 82L25

Sensing System

0 = without hand lever

H = with hand lever

Opening angle limitation

0 = Standard-opening angle

3 = 90° opening angle

4 = 75° opening angle

5 = 60° opening angle

6 = 45° opening angle

7 = 30° opening angle

Clamps wih reduced opening angle upon request

= base model Power clamp without clamping arm to be marked with an additional „B“

Attention: Combination of numbers only possible according to lists in this catalog.

Major spare parts for all 82L.. models

Specification	Order no. for base model 82L25-1....0..	Order no. for base model 82L25-1....H..	Order no. for base model 82L32-1....0..	Order no. for base model 82L32-1....H..	Order no. for base model 82L40-1....0..	Order no. for base model 82L40-1....H..
Cylinder	8PW-030-1	8PW-042-1	8PW-015-1	8PW-043-1	8PW-016-1	8PW-044-1
Seal kit	8PW-030-1-00	8PW-030-1-00	8PW-015-1-00	8PW-015-1-00	8PW-016-1-00	8PW-016-1-00
End position sensors						
C8 connecting plug M8 x 1, fixed	–	–	8EA-023-2	8EA-023-2	8EA-023-2	8EA-023-2
B8 connecting plug M12 x 1, with lead	8EA-033-2	8EA-033-2	8EA-031-1	8EA-031-1	8EA-031-1	8EA-031-1
B7 connecting plug M12 x 1, fixed	–	–	8EA-060-1	8EA-060-1	8EA-060-1	8EA-060-1
Manual handle	–	8KB-031-1	–	8KB-031-1	–	8KB-032-1

Accessories, with or without manual handle

Specification	Order no. for base model 82L25-1....0.. /82L25-1....H..	Order no. for base model 82L32-1....0.. /82L32-1....H..	Order no. for base model 82L40-1....0.. /82L40-1....H..
Opening angle limitation spacer			
96º	8CE-218-1	8CE-098-1	8CE-198-1
90º	8CE-216-1	8CE-096-1	8CE-196-1
75º	8CE-213-1	8CE-093-1	8CE-193-1
60º	8CE-211-1	8CE-091-1	8CE-191-1
45º	8CE-209-1	8CE-089-1	8CE-189-1
30º	8CE-207-1	8CE-087-1	8CE-187-1
Clamping arm			
On-center U-shaped	8JG-075-3-01	8JG-065-2-01	8JG-067-2-01
Single arm	–	8JG-066-1-01	8JG-068-1-01
Connector cable (1 connector socket & 5m cable)			
Connector socket M8x1 straight, 4-pin 	–	8EL-009-1	8EL-009-1
Connector socket M8x1 angular, 4-pin 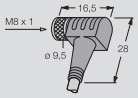	–	8EL-007-1	8EL-007-1
Connector socket M12x1 straight, 5-pin 	8EL-002-1	8EL-002-1	8EL-002-1
Connector socket M12x1 angular, 4-pin 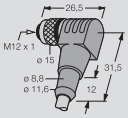	8EL-003-1	8EL-003-1	8EL-003-1
Adaptor M8 x 1-to-M12 x 1, 4-pin, straight	–	8EL-008-1	8EL-008-1
Adaptor for Ø25 tube systems (clamps without hand lever only)	82ZB-012-01	82ZB-005-1	82ZB-005-1

Adapter for Ø25 tube system for

82L32-1...0.., 82L40-1...0.., 82ZB-005-1, 82ZB-006-1

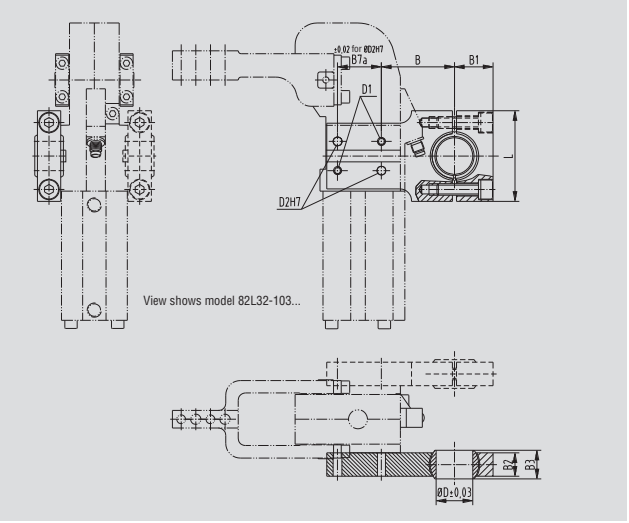

Model no.	B	B1	B2	B3	B7a ±0,1	D ±0,03 Ø	D1	D1 H7	L
82ZB-005-1	50	26,4	16	19,6	30	25	5,5	6	62
82ZB-006-1	55	26,4	16	19,6	35	25	6,6	6	62

All dimensions shown in metric (mm).

Series 82L25-1, 82L32-1, 82L40-1, (with and without manual handle)

Adapter for Ø 25 tube system for 82L25-1...0..

82ZB-012-1

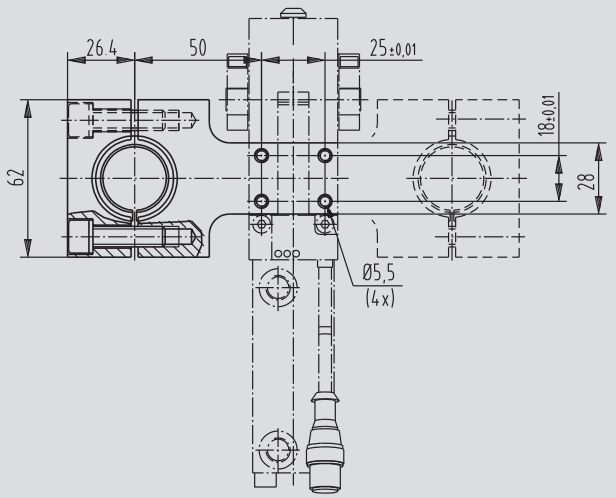

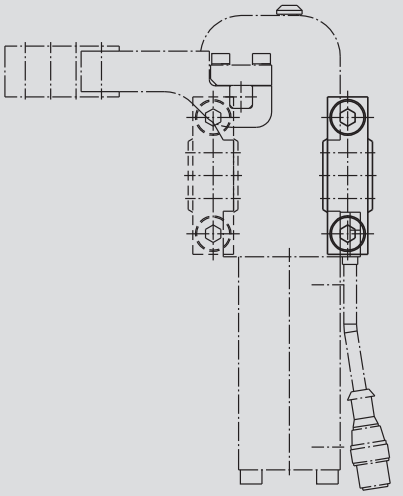

View shows model 82L25-103...

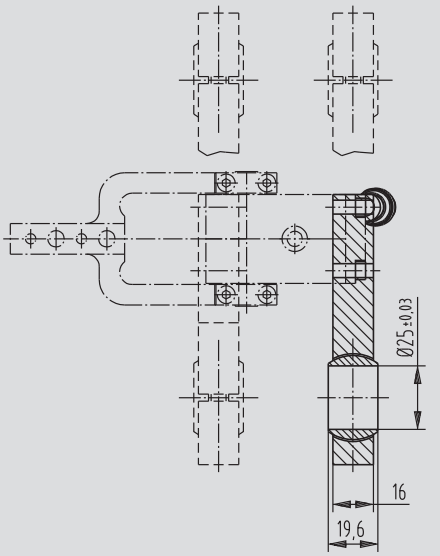

StrongHold

StrongHold *SELECT* Series

MRO
Interchange

Reduced
Maintenance
Costs

StrongHold Standard Series

Proven
Application
Performance

Robust
Products

Product group – stronghold clamping system

	Model no.	Page
	70250 70260	15.18
	090-011-113 090-012-221 090-012-224 090-013-332 090-013-334 090-021-111 090-021-114 090-022-222 090-022-225 090-023-333 090-023-335	15.19
	010-011-113 010-012-221 010-012-224 010-013-332 010-013-334 010-021-111 010-021-114 010-022-222 010-022-225 010-023-333 010-023-335	15.20
	010-210-400 010-210-501 010-210-702 010-211-002 010-211-004 010-211-502 010-211-504 010-212-004	15.21
	030-1-S-475 030-1-D-475	15.23
	030-1-S-1100 030-1-D-1100	15.24

	Model no.	Page
	030-1-S-2400 030-1-D-2400	15.25
	030-1-S-4000 030-1-D-4000	15.26
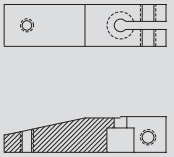	031-S-475 031-L-475 031-S-1100 031-L-1100 031-S-2400 031-L-2400 031-S-4000 031-L-4000	15.27
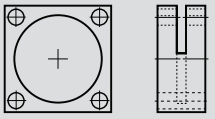	052-Series	15.29
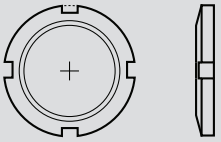	051-Series	15.29
	70626	15.30
	020-011-011DE 020-012-021DE 020-013-031DE	15.31
	039-101-000DE 039-104-000DE 039-108-000DE 039-109-000DE	15.33

	Model no.	Page
	70150	15.34
	100178DE 100178-230DE	15.35
	100186DE 100186-230DE	15.36
	100179DE 100179-230DE	15.37
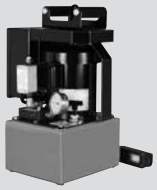	100888DE 100888-230DE	15.38
	100279DE	15.39
	100920DE 100190DE	15.40
	037-100-122	15.41

	Model no.	Page
	500173DE 500174DE	15.42
	70912 70913	15.43

Building safe workholding systems

Safety means paying attention to the smallest details. A hastily assembled workholding system can result in a hazardous operator environment. Hydraulic workholding is not a generic technique where most anything will work, nor is there one right or best answer for all situations. Each application is different and can be approached in many different ways. Because of this versatility, there is no rule-of-thumb to follow to guarantee safety. A careful balance of knowledge, fixture design and common sense are key to avoiding injuries.

Plan your fixture installation with operator safety in mind. By nature, most clamping devices have pinch points. Many times the fixture can be designed to shield the operator from a pinching hazard. Often the placement of the clamping device in the fixture can minimize the gap between the clamp and the workpiece, thus reducing or eliminating the pinch point. Perhaps the clamping control valve or switch can be located such that the operator cannot reach the fixture and the control at the same time. Dual palm buttons on electrically-actuated systems serve the same purpose.

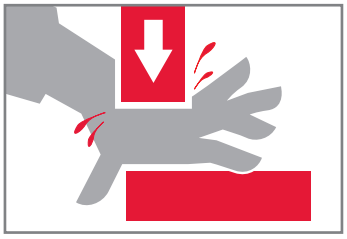

Do not require the operator to hold the workpiece in position during the clamping operation. Make sure that the workpiece is self-supporting and self-locating so that operator hands are out of danger when the hydraulic system is actuated. Often a simple spring plunger is all that is necessary.

The ***lowest*** **pressure rating** of any component in the clamping system sets the *maximum* pressure rating for the entire system.

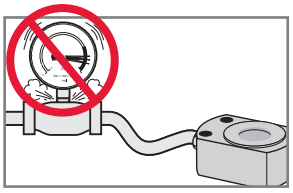

Most hydraulic workholding components are rated at 5,000 PSI maximum. However, some components are rated at less than 5,000 PSI. The maximum pressure is listed on each product page of this catalog. ***Never exceed this rating***.

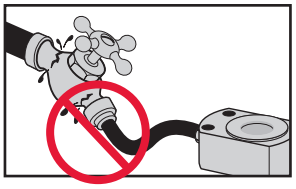

Just having a clamp that is rated at 5,000 PSI is not enough. Every hose, fitting, valve, adapter and tube exposed to pressure must be rated at or above the maximum hydraulic system pressure. Most "hardware store" fittings are intended only for low pressure plumbing. *Never use water pipe fittings or copper tubing and brass fittings for hydraulic service.*

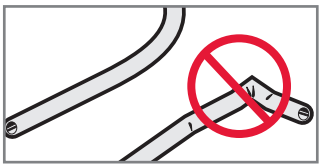

Use **proper tools** when bending tubing, and maintain proper minimum bend radii for hoses and tubing. If a hose or tube is ever kinked, replace it. Don't risk a rupture. Fluid escaping under high pressure is dangerous. The resulting loss in pressure could release the workpiece from the fixture and cause serious injury and equipment damage by being ejected from the machine or breaking tooling.

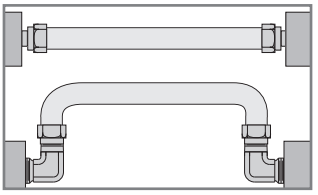

Tubing and hoses do flex when pressurized. Allow for that movement by supporting the fluid lines away from surfaces which could abrade the surface and eventually cause damage. Avoid straight lengths of hose and tubing. A bend will allow for this deflection without putting too much stress on the line.

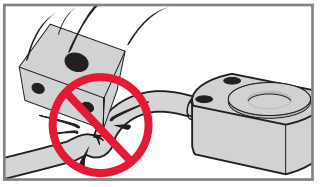

Even if proper hydraulic tubing and fittings are specified, be sure to protect them from abuse. Components damaged from abrasion or accidental dropping of a workpiece will no longer have the strength and safety of the original design.

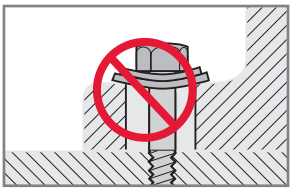

Use **proper mounting hardware** when installing workholding clamps and other components. Always use the largest bolt available to fit in the mounting hole. In many cases, the recommended cap screw or thread is specified on the product page of this catalog. Sometimes the mounting hardware is included with the component. Always use supplied hardware.

Safety means paying attention to the smallest details.

Application A

Multiple double-acting actuators can be operated simultaneously when powered by a pump.

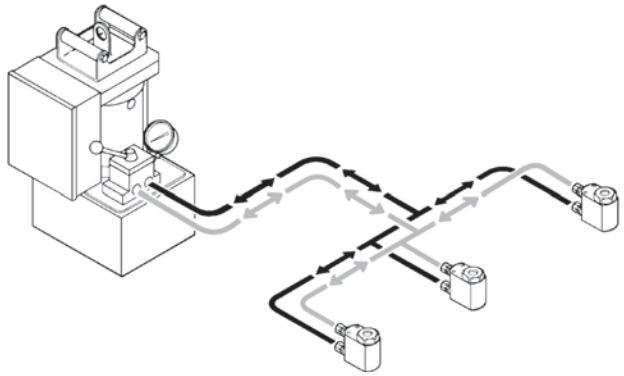

Application B

Two pairs of single-acting actuators are independently operated by remote mounted control valves and powered by one pump. Check valves prevent return line pressure fluctuations from affecting released clamps. Pressure port “P” check valves are built into the control valve.

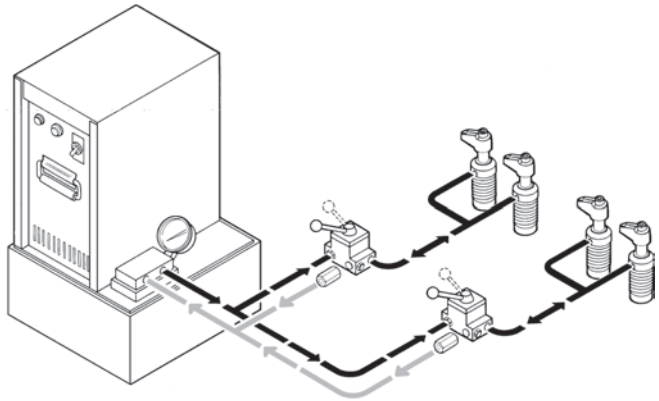

Application C

Similar to Application C, one pair of single-acting actuators and one pair of double-acting actuators are independently controlled by 100969DE directional control valves. When using more than one directional valve in one circuit, “P” port check valves 500174DE are required to prevent loss of clamping pressure in one circuit while actuating another. “T” port check valves 500173DE should be used in single-acting circuits where return line pressure fluctuations may affect released clamps.

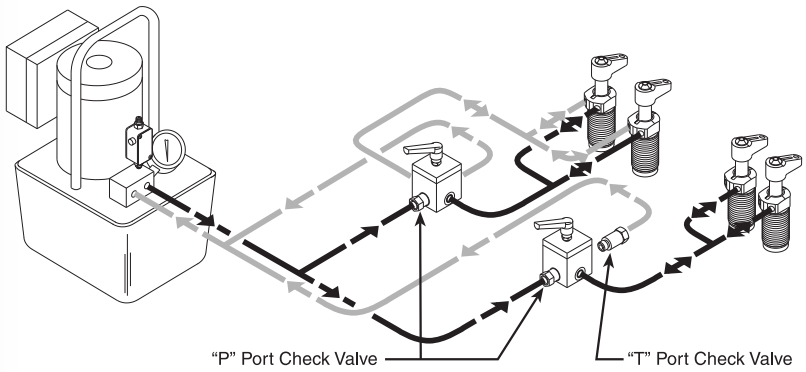

Power workholding systems

Application D

Rotating unions are used to connect pressure and return lines on applications where fixture rotation does not allow fixed plumbing. Here, three single-acting actuators are independently operated by three remote mounted control valves. Each valve is connected to the rotating union which, in turn, is connected to a single pump.

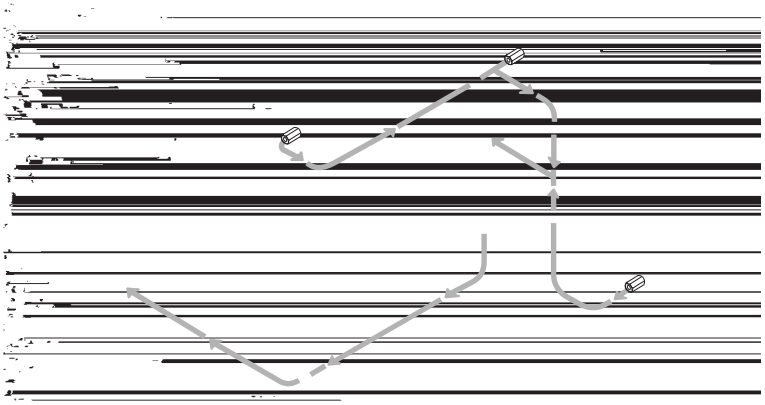

Application E

Two single-acting actuators operate simultaneously, controlled by a remote manual valve. A sequence valve insures that the workpiece is clamped before the work support is locked.

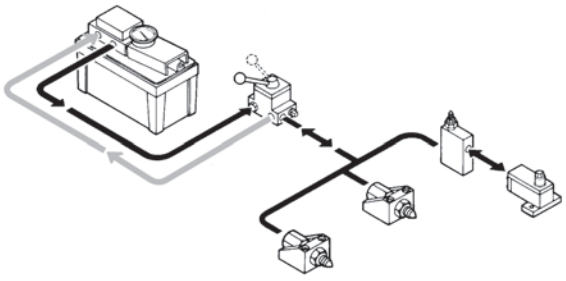

Application F

Similar to Application B, (on page 15.8) the three actuators are operated by a remote mounted control valve. This type of valve allows the pump to be located away from the workstation. The valve can be manually operated or, as shown, an electrically operated remote control valve is used. This valve can be used to give the operator push-button convenience or fully automated control by the machine tool.

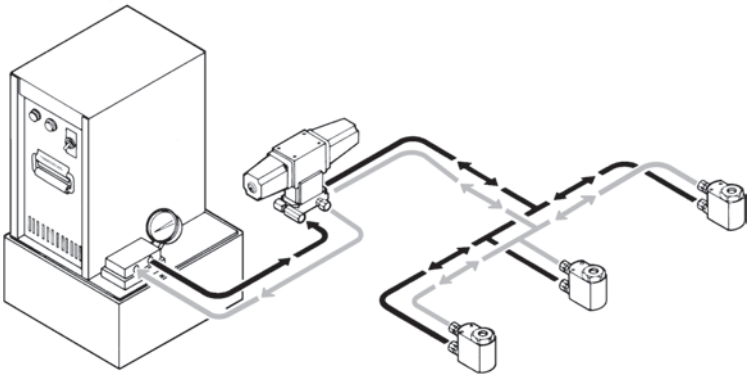

Application G

Similar to Application F (above), a double-acting swing clamp is actuated before sequencing a work support. When released, the work support drains back through the sequence valve's internal check valve.

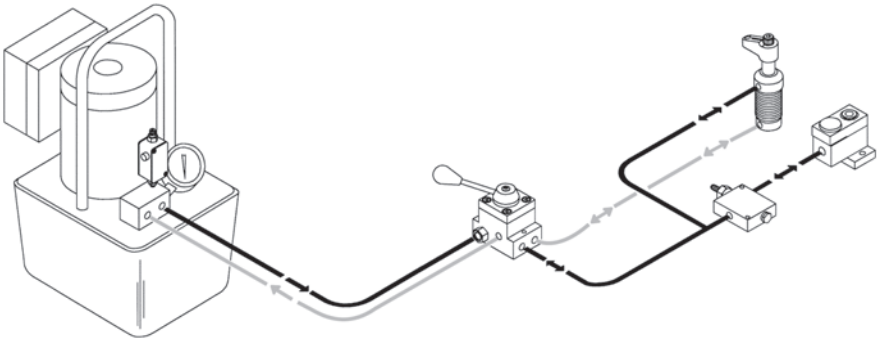

Application H

Like Application C (on page 2), two single-acting systems are independently operated by remote mounted control valves. Here the pressure reducing valve allows each system to have its own maximum pressure. The cylinder on the left operates at the pressure of the power source. The cylinder on the right can be set at a lower pressure by adjusting the pressure reducing valve.

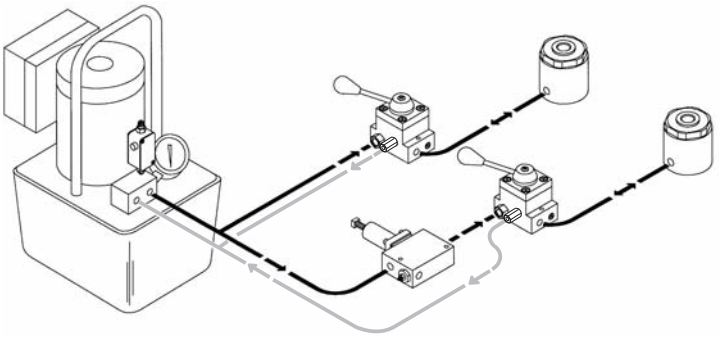

Application I

DE-STA-CO's Manual Pallet Valve is the simplest way to disconnect the power source from a pressurized pallet. For use only with single-acting actuators, it provides an automatic, leak free shut-off. An accumulator makes up for temperature changes and minor leakage. Built-in filtration protects this valve from contamination.

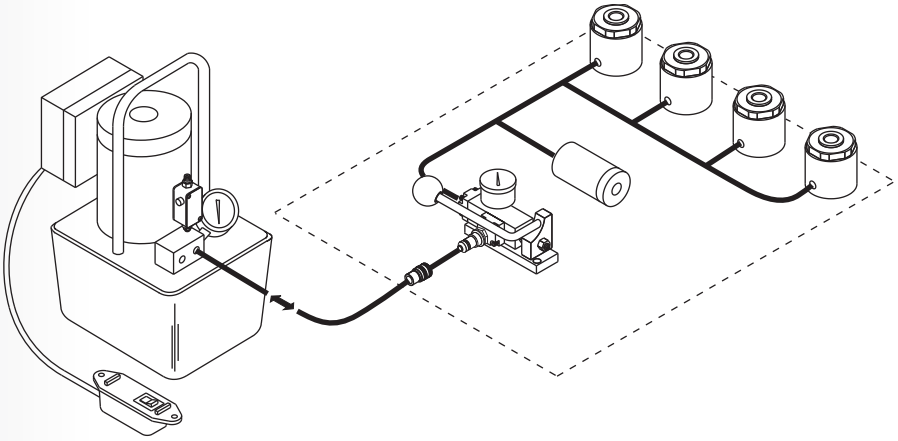

Application J

For pallets using double-acting actuators, DE-STA-CO's double-acting pallet valve system uses a pilot-operated check valve to maintain pressure on the pallet. The three position directional valve mounts at the operator's workstation instead of the pallet. Any of DE-STA-CO's standard, constant pressure pumps operate the system. An accumulator makes up for temperature change and minor leakage.

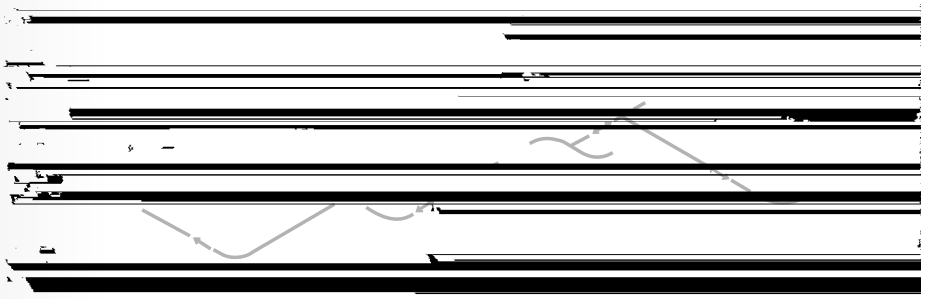

System design information

Planning

The most important and cost effective part of the fixture design process is planning. All facets of the project should be considered, and all questions answered before fixture design begins.

How many operations are required?
What machine will be used?
What is the expected cycle time?
How many parts will be run? How often?
How fast must the workpiece be changed?

The answers to questions like these will help determine the relative cost/benefit of the clamping system chosen for the fixture.

The following information will help prove that a hydraulic power clamping system can be a cost effective fixturing alternative.

Hydraulic Force

A basic principle of hydraulics states that pressure applied to a confined fluid is transmitted equally in all directions. This principle allows the transmission of pressure through tubes and hoses to remotely located actuators where that pressure is converted to usable force.

The simplicity of hydraulic power clamping can be summed up in one small equation:

FORCE = Pressure X Area

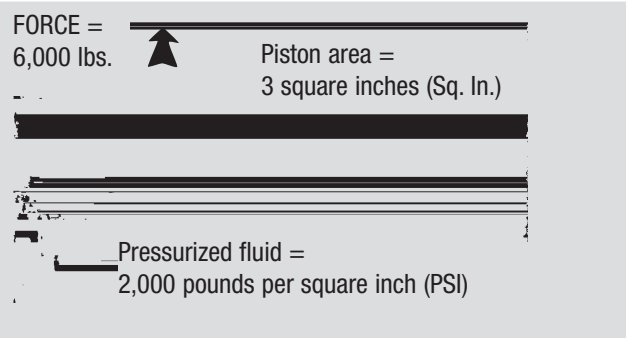

In the cylinder above, the fluid pressurized at 2,000 PSI is acting on the 3 sq. in. piston. As the formula says, 2,000 PSI times 3 sq. in. yields a force of 6,000 lbs.

This same concept applies to all hydraulic actuators.

Plumbing Options

The method used to route the pressure to the actuators on the fixture should be determined early in the planning stage. The plumbing is an essential part of the fixture and should never be left as an afterthought. There are two basic plumbing methods: conventional and manifold mount.

Conventionally mounted components have threaded ports which accept fittings for tubing and hoses. Many different types of fittings are available, giving you several options for customizing your design. Since most of these components are commonly available, conventional mounting will typically be the lower cost option.

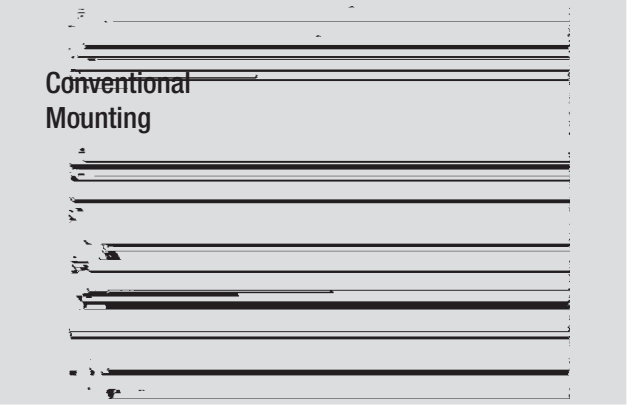

The threaded ports are usually one of two designs, NPT tapered pipe threads or SAE O-Ring boss.

NPT Tapered Pipe Threads depend on the interference of the mating thread forms. This thread form has been in use for general plumbing applications for many years. Consequently there is a wide selection of fittings available for even the most unique applications. However, the thread form is the same whether the application is a household water supply or a high pressure hydraulic workholding system. It is important to specify only fittings that are rated for the maximum pressure to be seen in your application. *Plastic, copper and iron pipe fittings are not acceptable alternatives.*

Straight Thread, O-Ring Boss Ports per SAE J514 are common in both industrial and mobile hydraulic systems. Because this system of ports and fittings depends on a simple, replaceable O-ring for sealing instead of the interference of perfectly formed threads, the chance for leakage is greatly reduced.

Systems can be disassembled and reassembled numerous times with no additional make-up required. Fittings will always be in the exact same place and elbows will always point in the right direction. There is never the need to over or under-tighten elbows to properly align them in your system.

Pipe sealants and teflon tapes that can contaminate your system are not required. The torque needed to properly tighten these fittings is less, too.

All of DE-STA-CO's newest products have the SAE ports. In addition, we have made many of our other products available with SAE ports. Where available, this is noted on the product description page.

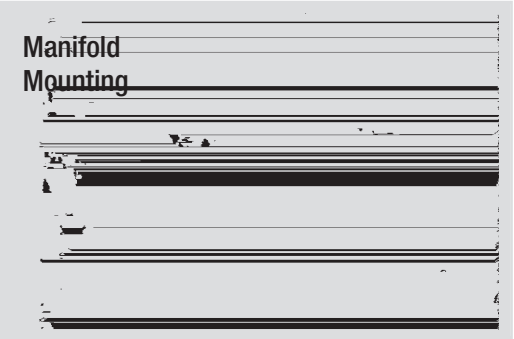

Manifold mounted components eliminate the need for external fittings, tubing, and hoses because the fluid passages are machined directly into the fixture. Securing the workholding component to the fixture automatically makes the hydraulic connection.

Manifold Mounting:

- Provides no-tool hydraulic connections
- Saves valuable fixture space
- Eliminates tubes, hoses or fittings that disrupt coolant flow and collect chips
- Simplifies post-machining fixture cleaning
- Reduces assembly and maintenance time
- Improves performance
- Means fewer hydraulic connections resulting in fewer potential leak points
- Results in a cleaner, more professional-looking fixture

Plumbing Sizing

When designing and assembling your hydraulic system, keep in mind that your choices of size and length of plumbing lines can significantly change the performance of your fixture. The back-pressure created by fittings, tubing and hoses can slow the operation of your system, especially single-acting systems. Larger diameter plumbing runs with a minimum number of bends and fittings will reduce this back pressure.

When sizing hydraulic lines, make sure you look at the inside diameter: 1⁄4" hose is not the same as 1⁄4" tubing. Hose is specified by its inside diameter. Hydraulic tubing is usually specified by the outside diameter. As example, 1⁄4" O.D., .035" wall tubing has an inside diameter of .180", a flow carrying capacity of only 50% of that of the hose.

Single-acting clamps can develop only a limited amount of pressure to force hydraulic fluid out of the clamp and allow it to retract. When the return fluid from multiple clamps must share the same hydraulic line, back pressure can easily become excessive and slow the clamp's retraction.

When connecting multiple clamps, you can use either a "daisy chain" or "home run" configuration. In a daisy chain, you use a tee at each clamp and run tubing from the first clamp to the second and then to the third and then the fourth, etc. When using a home run configuration, you begin at a manifold and run hydraulic lines all the way from the manifold to each clamp.

The daisy chain method uses less tubing so it might appear that this would minimize back pressure. However, in the daisy chain the fluid from all of the clamps must pass through a single hydraulic line. In the home run, while there may be longer runs, each line only has to accommodate flow from one clamp.

The viscosity of the hydraulic fluid used will also affect back pressure. Viscosity is affected by temperature. Contact the factory to discuss applications running below room temperature. We recommend using only DE-STA-CO fluids. Other fluids may have different viscosities or other characteristics that can adversely affect system operation.

Single-acting vs. Double-acting

Another decision to be made early in the planning stage is whether to use single-acting or double-acting components.

Single-acting components are typically actuated using hydraulic pressure. When released, the pressure is removed and the actuator is returned by a spring which forces the hydraulic fluid back into the pump reservoir. This type of system is usually the most cost effective because each actuator needs only one pressure source connection for operation. Single-acting actuators should be vented to clean atmosphere whenever appropriate. Remember to double the plumbing for double-acting systems. This does, however, use more valuable fixture space and adds to the cost.

Nevertheless, there are good reasons to use double-acting systems. The larger and/or more complex the circuit design, the greater the potential for return restrictions which will slow the return of the single-acting actuators. Double-acting actuators are ideal for applications which require both pushing and pulling or returning clamps with heavy, custom designed attachments. They work well for powering linkages which require fast actuation in both directions.

Double-acting clamps are often used in automated systems where coordinating the action of the clamp with that of the rest of the system requires fast, positive, predictable cycle times. By installing pressure switches in both the pressure and return lines, the status of the clamp can constantly be monitored.

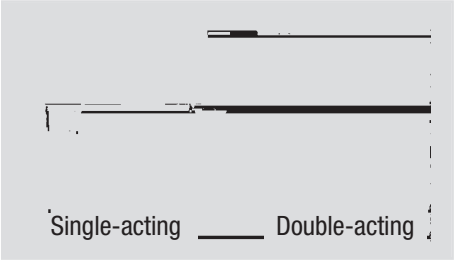

System design information

Automation

Hydraulic power clamping provides varying degrees of automation. During the planning stage, the method of actuating the fixture must be considered. The simplest systems use manually operated valves where the operator turns a handle to clamp and unclamp the fixture. In totally automated systems, the machine tool itself can be programmed to control the clamping and unclamping functions through the use of electric solenoid valves.

Positioning vs. Clamping

Hydraulic actuators are typically used on a fixture to perform one of two functions: positioning or clamping. The primary purpose of a positioning actuator is to push the workpiece against the solid positioning stops built into the fixture. Clamping actuators hold the workpiece in position during machining.

With a properly designed fixture, all the operator needs to do is to place the workpiece into the fixture. The positioning actuators (typically cylinders) will move and correctly orient the workpiece against the stops, and hold it there while the clamps are sequenced, thus securing the part to resist machining forces. While clamps are always needed to hold the part, positioning actuators are sometimes optional depending on the workpiece, fixture design, and the level of operator involvement.

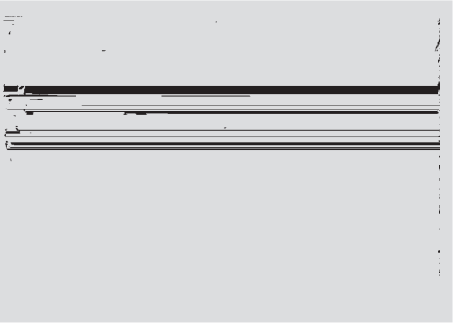

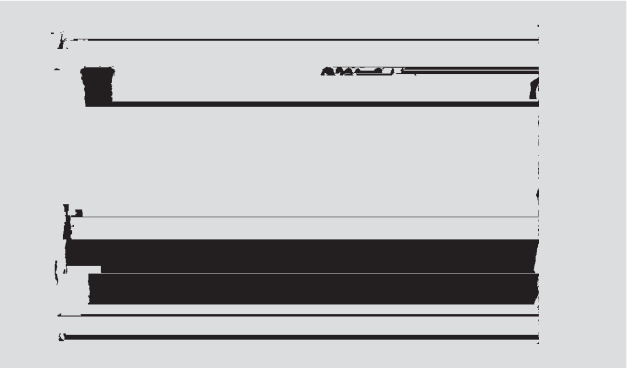

3-2-1 Locating Principle

One of the most basic concepts of workholding is referred to as the 3-2-1 Locating Principle. To repeatedly locate (or reference) a workpiece, it must be oriented and positioned in three planes: X, Y and Z.

Thinking of a typical fixture where the workpiece is loaded and gravity holds it in place during clamping, start with the Z axis. Knowing that three points define a plane, it follows that any rigid object in the fixture is technically being supported at only three points regardless of shape. With the part supported in this manner, the workpiece is prevented from moving in the Z direction, but is still free to rotate or slide in the X and Y directions. To prevent rotation and position the workpiece in the Y direction, two stops are used. With the part contacting three stops in the Z axis, and two stops in the Y axis, the only direction the part can move is in the X direction. A single stop is all that is needed to prevent this motion. Always use three locators as the primary Z locators, two secondary Y locators and one tertiary X locator; thus, the name 3-2-1 principle. In rigid parts, these are the only solid stops required to locate the part. Any more are a duplication and can affect repeatability from one part to the next.

Resisting Forces – Stops vs. Clamps

When designing the solid stops for a fixture, it is usually best to locate them so that they directly resist the machining forces.

If the cutting tool forces are resisted by solid stops, the workholding clamps need only hold the part in position and can typically be much smaller, saving money and valuable fixture space.

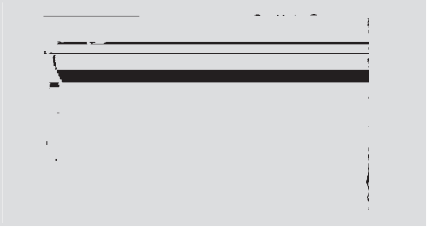

Torque vs. Tension

A user's first introduction to hydraulic power workholding is often the replacement of the nut on a typical strap clamp with a center hole cylinder.

If the torque of the nut is known, the resulting tension on the bolt or stud can be easily approximated.

$$\frac{\text{Torque (In. Lbs.)}}{\text{Nominal thd. size (In.) X .12}} = \text{Tension (Lbs.)}$$

For example, a 1/2-13 UNC nut is torqued to 300-in. lbs. The resulting approximate tension would be:

$$\frac{300}{.5 \text{ x } .12} = \text{5,000 lbs. Tension}$$

The most accurate way to determine that the hydraulic power clamping system is exactly duplicating the mechanical system is to place the center hole cylinder over the stud or bolt and replace the nut loosely over the cylinder. Use the hydraulic system to partially extend the cylinder until it contacts the nut. Use a torque wrench to torque the nut to its original value while monitoring the system pressure gauge. When the nut is properly torqued, the gauge will indicate the exact system pressure setting for this application.

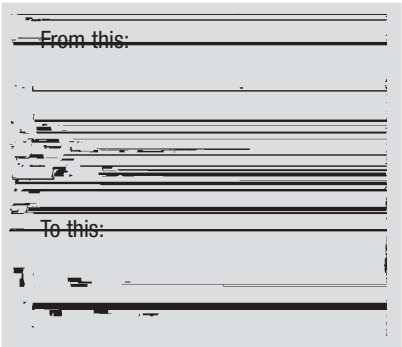

Operating Pressures

Most DE-STA-CO workholding components are rated at 5,000 PSI. When designing, it is a good rule of thumb to choose components for your fixture that will give you the forces you need at a pressure of about 3,000 PSI. This gives you plenty of latitude to adjust the system pressure both up and down when fine tuning the fixture on the machine tool. Operating at lower pressures, while sometimes necessary, does not make the most efficient use of these components. Higher pressures allow the use of smaller components, saving cost and fixture space.

Design Stroke Length

Clamps and cylinders should never be designed into a fixture at their rated full stroke. Always use something less than full stroke to make sure that all tolerances and variations in the workpiece, workholding device and fixture can be accepted, insuring that the workpiece is properly clamped.

Volume Calculations

The total volume required to actuate a circuit should be checked to make sure that the power source chosen has enough usable fluid capacity. The fluid volume required to fully actuate each clamp and cylinder is listed in the charts on each product page throughout the catalog. By totaling this value for each component, you know the maximum fluid volume that could possibly be used in this fixture. Even the smallest DE-STA-CO pumps have enough fluid volume for most applications.

Since the fixture is designed to use less than the full stroke of the actuators, the actual fluid volume will be less. If it becomes necessary to get an exact figure, it can be easily calculated using the following formula:

$$\text{Effective Area (sq. in.) X Stroke (in.)} = \text{Fluid Capacity (cu. in.)}$$

The effective area of the actuators (from product chart) multiplied by the stroke used (not total stroke) will result in the fluid volume. For example, if a cylinder has an effective area of 2 square inches, and an actual stroke of 3 inches, its fluid volume will be 2 x 3 or 6 cubic inches. (For easy reference, 231 cubic inches = 1 gallon.)

System Care and Maintenance

The single most important factor in determining the life of a properly designed system is the effort taken to keep the fluid clean.

System Flushing

During assembly, make sure all fluid-carrying components are flushed with clean solvent and blown dry. Hydraulic tubing is particularly notorious for the amount of contaminants found inside. If not removed, this debris will quickly damage seals and score precision-fit metal parts. The contamination will also clog passages in pumps and control valves.

After fixture assembly, the entire system should be flushed to remove any contamination created during assembly. Use only hydraulic fluid for this procedure. Solvents may become trapped in the system, contaminating the fluid.

Once the fluid in the system is clean, be sure to keep it that way by changing the fluid on a regular basis and making sure that extreme care is taken whenever the system is disconnected or disassembled so that new contaminants are not introduced.

System design information

System Bleeding

Air trapped in the hydraulic system is the most common cause of erratic operation and slow return times. The most common way to bleed a system is to pressurize the circuit and carefully loosen a fitting just enough to let fluid escape. The trapped air will usually be flushed out with the fluid. With conventionally mounted components, the fittings required for connection provide ideal bleeding locations. Since manifold mounting eliminates external fittings and lines, the fixture designer/builder no longer gets bleeding points by default and must now consciously plan for system bleeding.

As workholding hydraulic systems become more sophisticated, compact and automated, proper bleeding becomes increasingly important. Air trapped in the system is most often revealed by the slow retraction of single-acting (spring return) components. To understand why, picture the following example:

Single-acting actuators – return springs develop 15 PSI
Flow required to clamp – 1 cu. in.
System pressure – 3,000 PSI

Return time for this application is dictated by the time it takes to force 1 cu. in. of fluid through all of the return line restrictions at 15 PSI.

Take the same example with 1 cu. in. of air (at atmospheric pressure) trapped anywhere in the system:

When pressurized, this "bubble" compresses and becomes 200 times smaller or .005 cu. in. This means that .995 cuin, of oil must be pumped into the system just to compress the bubble. Now when the clamps are released, 1.995 cu. in. of fluid must leave the system – nearly double that of the same system without air.

Calculating Machining Forces

To help you choose the right cylinders, clamps, and work supports, it is important to know how much clamping or supporting force is necessary.

There are numerous ways to calculate the approximate forces that the cutting tool places on the workpiece. **Please note that the results of these calculations are estimates and must never replace experience, common sense, and caution.** In addition, these results indicate only the magnitude of the force, not the direction. Depending on the specific application, the direction of the force may vary significantly from the beginning to the end of the cut.

Milling, Turning and Boring

A rough estimate of cutting tool force – if the horsepower required to make the cut is known – is the result of the following equation:

$$\text{Cutting Force (lbs.)} = \frac{\text{HP x 24,750}}{\text{Cutting Speed (SFPM)}}$$

For example, an operation is expected to take 5 horsepower with a cutting speed of 150 surface feet per minute.

$$\frac{5 \times 24{,}750}{150} = 825 \text{ lbs. Cutting Force}$$

Where horsepower is not yet known, a value called unit power comes into play. Unit power is the horsepower required to remove one cubic inch of material in one minute. (Refer to Table A on Page 10.)

Milling

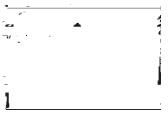

Depth of Cut (in.)
Feed per Tooth (in.)
Number of Teeth
Unit Power

___X___X___X___ X 125,950 = _____ lbs. Cutting Force

Example: a 4-flute end mill is used to machine aluminum. The cut is 1⁄2" deep and the feed per tooth is .002". From the table the unit power value is 0.4. So the cutting force transferred to the workpiece is:

$$.5 \times .002 \times 4 \times .4 \times 125{,}950 = 202 \text{ lbs. Cutting Force}$$

Note that this calculation assumes a full width cut. Applications using less than the full cut may reduce the calculated force by the percentage of the full cut being taken.

Turning and Boring

A similar calculation applies to turning and boring. Note that the cutting force is usually perpendicular to the cutting tool but since the tool or workpiece is rotating, the direction of the force relative to the work piece is constantly changing.

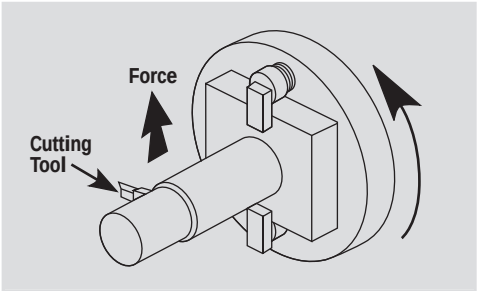

Depth of Cut (in.)
Feed per Revolution (in.)
Unit Power

____X____X____X 396,000 = _____ lbs. Cutting Force

Example: Boring a hole in alloy steel heat treated to 37 Rc (unit power 1.7), with a depth of cut of .060", a feed rate of .003" inches per revolution gives a result of:

.060 x .003 X 1.7 x 396,000 = 121 lbs. Cutting Force

Drilling

The forces involved in drilling can be separated into two distinctly different categories: thrust and torque. With the number of drill styles available, the thrust varies tremendously. Torque is somewhat less variable and can be estimated as shown:

Feed (IPR) x (Drill Dia.)^2 x Unit Power x 49,500 = Drilling Torque (In. Lbs.)

For example, drilling a 3⁄4" diameter hole in magnesium (unit power .2) with a feed rate of .010" per revolution gives a result of:

.010 x .75^2 x .2 x 49,500 = 56 in. lbs.

Friction Coefficient

Now that an estimate of the amount of cutter force being transferred to the workpiece is available, we must determine how much clamping force is necessary to resist the cutter force. This depends on the amount of friction between the workpiece and the fixture, commonly referred to as the friction coefficient.

Typically, if an object is lying on a surface, the amount of force required to slide it sideways will be considerably less than the weight of the object. It follows then that when clamping a workpiece to resist machining forces, the clamping force will need to be much higher than the machining force. The following chart shows approximate friction coefficients:

Static Friction Coefficients for Steel on Various Materials

Material	Friction Coefficient Clean	Friction Coefficient Lubricated
Brass	0.35	0.19
Bronze	–	0.16
Bronze, Aluminum	0.45	–
Bronze, Phosphor	0.35	–
Bronze, Sintered	–	0.13
Carbon, Hard	0.14	0.11-0.14
Copper-Lead Alloy	0.22	–
Graphite	0.10	0.10
Iron, Cast	0.40	0.21
Steel	0.80	0.16
Tungsten Carbide	0.4-0.6	0.1-0.2

The estimated clamping force is divided by the appropriate friction coefficient and then multiplied by a suitable safety factor to get an estimated total clamping force required.

$$\frac{\text{Machining Force (lbs.)}}{\text{Friction Coefficient}} \times \text{Safety Factor} = \text{Total Clamping Force (Lbs.)}$$

Example: A steel workpiece on steel rest buttons is being machined using coolant. The estimated machining force is 300 lbs. From the table the friction coefficient for steel on steel (lubricated) is .16. After choosing an appropriate safety factor (usually about 2), the estimated total clamping force would be:

$$\frac{300}{.16} \times 2 = 3750 \text{ lbs. Total Clamping Forces}$$

This total clamping force may now be divided by the number of clamps holding the workpiece, which equals the clamping force needed for each clamp.

TABLE A		Unit Power hp/in^3/min		
		Turning	Drilling	Milling
Material	Hardness Bhn	HSS & Carbide Tools	HSS Drills	HSS & Carbide Tools
STEELS Plain Carbon Alloy Steels	85-200 35-40Rc 40-50Rc 50-55Rc 55-58Rc	1.4 1.7 1.9 2.5 4.2	1.3 1.7 2.1 2.6 3.2	1.4 1.9 2.2 2.6 3.2
CAST IRONS Gray, Ductile & Malleable	110-190 190-320	0.9 1.7	1.2 2.0	0.8 1.4
STAINLESS STEELS	135-275 30-45Rc	1.6 1.7	1.4 1.5	1.7 1.9
TITANIUM	250-375	1.5	1.4	1.4
NICKEL ALLOYS	80-360	2.5	2.2	2.4
ALUMINUM ALLOYS	30-150 500 kg	0.3	0.2	0.4
MAGNESIUM ALLOYS	40-90 500 kg	0.2	0.2	0.2
COPPER ALLOYS	10-80Rb 80-100Rb	0.8 1.2	0.6 1.0	0.8 1.2

Design symbols

Cylinder Symbols

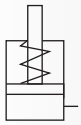
Cylinder, Single-acting

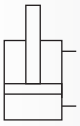
Cylinder, Double-acting

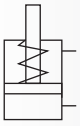
Cylinder, Single-acting or Swing/Pull Clamp,Double-acting

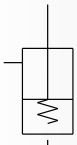
Pull Cylinder, Single-acting, Spring Return

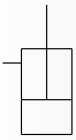
Pull Cylinder, Single-acting

Clamp Symbols

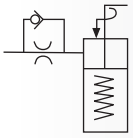
Swing/Pull Clamp, Single-acting with Flow Restrictor Valve

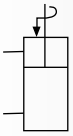
Swing/Pull Clamp, Double-acting

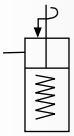
Swing/Pull Clamp, Single-acting

Work Support Symbols

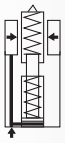
Work Support, Fluid Advance

Work Support Symbols

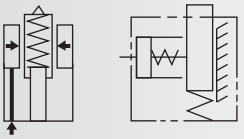
Work Support, Spring Advance

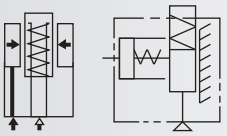
Work Support, Air Advance

Power Source Symbols

Electric/Hydraulic Pump

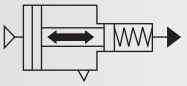
Air/Hydraulic Pump, Reciprocating

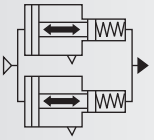
Air/Hydraulic Pump, Reciprocating 2-stage

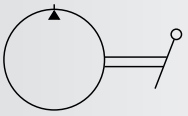
Screw Pump

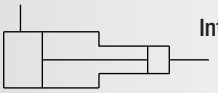
Intensifier

Control Valve Symbols

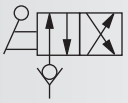
Directional Control Valve, Manual 4-Way, 2-Position with Inlet Check Valve

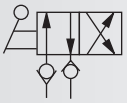
Directional Control Valve, Manual 4-Way, 2-Position with Inlet and Outlet Check Valves

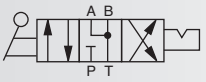

Directional Control Valve, Manual 4-Way, 3-Position Detented

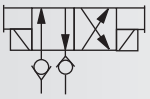
Directional Control Valve, Electric 4-Way, 2-Position with Inlet and Outlet Check Valves with Manual Override

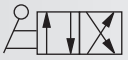
Directional Control Valve, Manual 4-Way, 2-Position

Control Valve Symbols

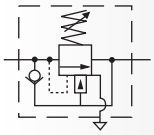
Pressure Sequence Valve, Adjustable with Reverse Free-Flow Check Valve

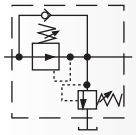
Pressure Reducing Valve, Adjustable with Reverse Free-Flow Check Valve w/Over-Pressure Relief Valve

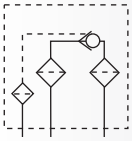
Check Valve, Pilot Operated with Filters

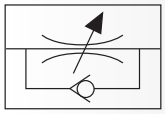
Flow Restrictor, Adjustable with Reverse Free-Flow Check Valve

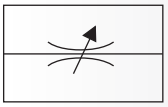
Flow Restrictor, Adjustable

Pallet Coupling Symbols

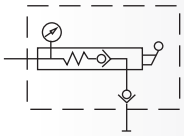
Manual Pallet Valve with Gauge and Male Coupler

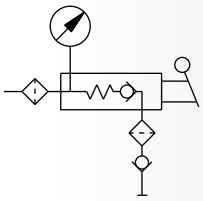
Manual Pallet Valve with Filters, Gauge and Coupler

Accessory Symbols


Hydraulic Coupler, Half-Male or Female

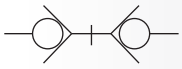
Hydraulic Coupler Set, Coupled

Accessory Symbols


Check Valve

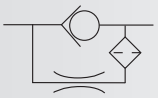
Flow Restrictor, Fitted with Reverse Free-Flow Check Valve with Filtered Orifice

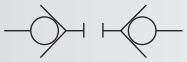
Hydraulic Coupler Set, Uncoupled


Accumulator, Gas Charged

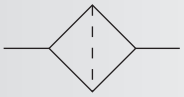
Filter


Pressure Gauge

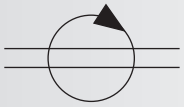
Rotating Union, Dual Circuit

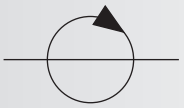
Rotating Union, Single Circuit

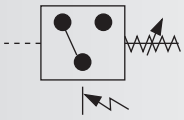
Pressure Switch, Adjustable

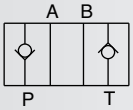

Check Valve Sub-Plate


Air Bleed Valve


Ball Valve

StrongHold *SELECT*

Introducing
StrongHold *SELECT*
Workholding Products from DE-STA-CO.

The new StrongHold ***SELECT*** series brings you hydraulic swing clamps, threaded body cylinders, block cylinders and accessories.

Immediate advantages include:

MRO Interchange: Flexibility to upgrade and interchange with other brands, or use in new/duplicate fixture designs

Long-life, decreased maintenance: Advanced seal and wiper technology that resist contamination and leaks

Corrosion resistance: Treated metal surfaces for better wear

Reduced maintenance costs: High cycle life with less down time, lower replacement costs

Productivity improvement: Significant set-up time reduction as operators can clamp entire fixture from one location

Competitive pricing: Better quality components with higher ROI

Our new StrongHold ***SELECT*** series is yet another example by DE-STA-CO making the best even better. Improving upon our existing StrongHold brand, we continue to design products and expand our product selection that help you, our customers, achieve tangible cost reduction in your manufacturing process.

We look forward to working with you!

DE-STA-CO is a global leader in the innovation, manufacture, and support of clamping, gripping, transfer and robotic tooling solutions for workplace automation needs. The DE-STA-CO family of companies is committed to being a lean resource for its customers. Our wide range of products and value-added services allows us to offer you solutions that increase profitability and efficiency through the use of optimal clamping and automation solutions.

Hydraulic Cylinder

Block Style
Hydraulic
Cylinder

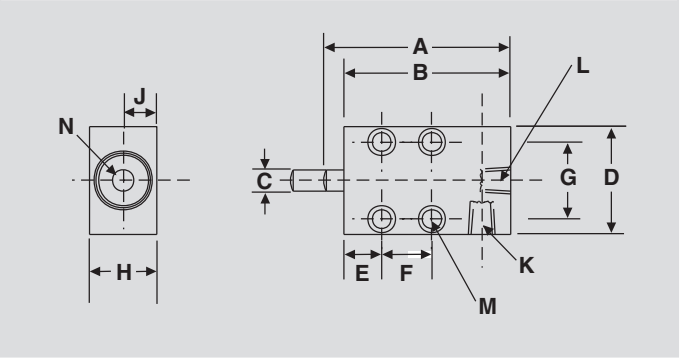

Model no.	Dimensions (In Inches)												
	A	B	C	D	E	F	G	H	J	K	L	M	N
70250 (Single-acting)	2.81	2.50	0.31	1.63	0.56	0.75	1.16	1.00	0.50	1/8 NPT	1/8 NPT	0.25	–
70260 (Double-acting)	3.13	2.88	0.50	2.00	0.25	1.25	1.50	1.25	0.63	1/8 NPT (2)	1/8 NPT (2)	0.25	5/16-18

Model no.	Stroke	Force at 3,000 PSIG Extend	Force at 3,000 PSIG Retract	Effective Area Clamping	Effective Area Unclamping	Oil Displacement
70250	0.50	1,325 lbs.	–	0.44	–	0.221 cu. in.
70260	1.00	1,325 lbs.	763 lbs.	0.44	0.24 Retract 0.25 cu. in.	Extend 0.45 cu. in.

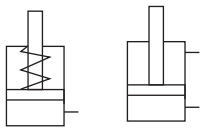

DE-STA-CO's Single-acting (spring return) and Double-acting Block Cylinders are designed for punching, pressing, riveting and bending applications. These block cylinders require no special mounting hardware and can be dual-position mounted (parallel or perpendicular) to piston travel on every model.

Tapped piston-ends allow the use of custom end attachments (double-acting recommended for attachments or mechanisms), while a vent port featuring a single-acting filter gives the cylinder a place to "breathe" and helps keep chips and other contaminants from sucking past the wipers (double-acting unclamp port).

Adjustable force ranging from "negligible" to maximum cylinder capacity is achieved by adjusting the input pressure. Advanced side-porting is provided for easy plumbing access.

Features:

- Variety of strokes to meet specific design needs
- SAE oil ports
- No special mounting hardware required
- Operating Pressure – 150 to 5,000 PSI

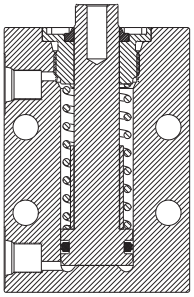

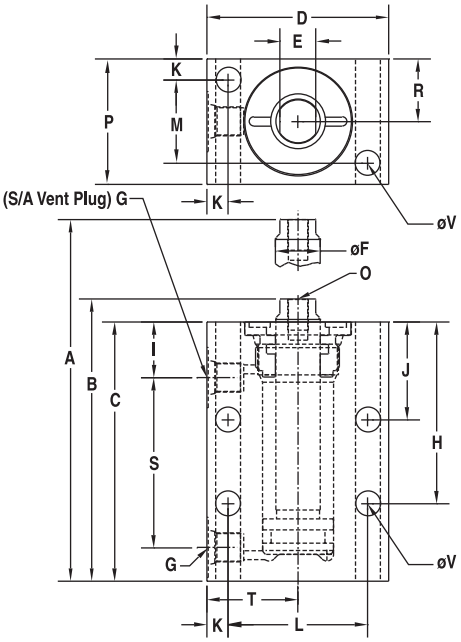

Single-acting Block Cylinders

Cat no.	Force at 5,000 PSI (lbs.) Push	Bore ø (in.)	Rod ø (in.)	Stroke (in.)	Effective Area (sq. in.) Push	Oil Capacity (cu. in.) Push
090-011-113	2,220	0.750	0.437	0.380	0.442	0.168
090-012-221	3,900	1.000	0.625	0.270	0.785	0.212
090-012-224	3,900	1.000	0.625	0.600	0.785	0.471
090-013-332	8,800	1.500	1.000	0.297	1.767	0.525
090-013-334	8,800	1.500	1.000	0.447	1.767	0.789

Double-acting Block Cylinders

Cat no.	Force at 5,000 PSI (lbs.) Push	Force at 5,000 PSI (lbs.) Pull	Bore ø (in.)	Rod ø (in.)	Stroke (in.)	Effective Area (sq. in.) Push	Effective Area (sq. in.) Pull	Oil Capacity (cu. in.) Push	Oil Capacity (cu. in.) Pull
090-021-111	2,220	1,400	0.750	0.437	0.630	0.442	0.292	0.279	0.184
090-021-114	2,220	1,400	0.750	0.437	1.500	0.442	0.292	0.663	0.438
090-022-222	3,900	2,390	1.000	0.625	0.790	0.785	0.478	0.620	0.378
090-022-225	3,900	2,390	1.000	0.625	2.000	0.785	0.478	1.570	0.956
090-023-333	8,800	4,900	1.500	1.000	1.000	1.767	0.982	1.767	0.982
090-023-335	8,800	4,900	1.500	1.000	2.000	1.767	0.982	3.534	1.964

Dimension Chart – Single & Double-acting Block Cylinders

Cat. no. Single Acting	Cat. no. Double Acting	A (S.ACT.)	A (D.ACT.)	Dimensions (In Inches) B	C	D	E	F	G	H	I	J	K	L	M	O	P	R	S	T	V
–	090-021-111	–	3.078	2.448	2.128	2.360	0.375	0.437	SAE#4	0	0.756	1.206	0.295	1.770	0.980	1/4-20UNC	1.570	0.785	0.900	1.180	0.280
090-011-113	090-021-114	3.698	4.818	3.318	2.998	2.360	0.375	0.437	SAE#4	2.058	0.756	1.248	0.295	1.770	0.980	1/4-20UNC	1.570	0.785	1.770	1.180	0.280
090-012-221	090-022-222	30031	3.551	2.761	2.441	2.559	0.500	0.625	SAE#4	0	0.788	1.378	0.295	1.969	1.181	5/16-24UNF	1.772	0.886	1.181	1.280	0.350
090-012-224	090-022-225	4.571	5.971	3.971	3.651	2.559	0.500	0.625	SAE#4	2.558	0.788	1.378	0.295	1.969	1.181	5/16-24UNF	1.772	0.886	2.391	1.280	0.350
090-013-332	090-023-333	3.472	4.175	3.175	2.680	3.150	0.835	1.000	SAE#4	0	0.708	1.420	0.374	2.403	1.548	1/2-13UNC	2.295	1.148	1.500	1.575	0.391
090-013-334	090-023-335	4.622	6.175	4.175	3.680	3.150	0.835	1.000	SAE#4	2.620	0.708	1.440	0.374	2.403	1.548	1/2-13UNC	2.295	1.148	2.500	1.575	0.391

Threaded Body Cylinders

StrongHold *SELECT*

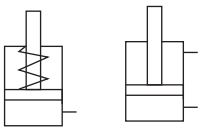

DE-STA-CO's Single-acting (spring return) and Double-acting Threaded Cylinders are extremely versatile and durable. They can be designed into a variety of high production applications including workpiece positioning, holding and ejecting applications where space is at a premium.

Double-acting cylinders assure complete powered retraction for CNC controlled operations (where time is critical) or when using heavy end effectors. Double-acting models are also suited to manufacturing applications, such as production punching.

Single-acting cylinders should be used with small end effectors only and where retraction speed is not critical.

Features:

- Variety of sizes that support precise fixture designs
- Springs are designed to return the cylinder and contact points, not intended to pull mechanisms.
- SAE fluid ports are common to all models
- Operating Pressure – 150 to 5,000 PSI

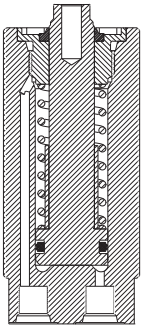

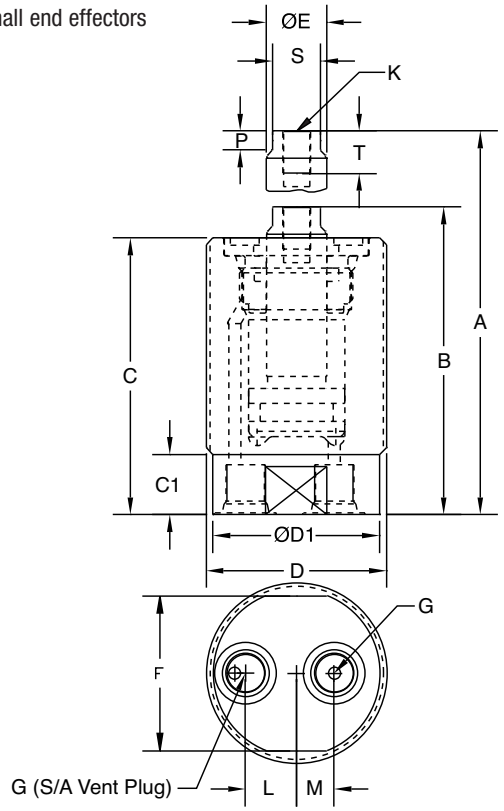

Single-acting Threaded Cylinders

Cat no.	Force at 5,000 PSI (lbs.) Push	Bore ø (in.)	Rod ø (in.)	Stroke (in.)	Effective Area (sq. in.) Push	Oil Capacity (cu. in.) Push
010-011-113	2,220	0.750	0.437	0.380	0.442	0.168
010-012-221	3,900	1.000	0.625	0.270	0.785	0.212
010-012-224	3,900	1.000	0.625	0.600	0.785	0.471
010-013-332	8,800	1.500	1.000	0.297	1.767	0.525
010-013-334	8,800	1.500	1.000	0.447	1.767	0.789

Double-acting Threaded Cylinders

Cat no.	Force at 5,000 PSI (lbs.) Push	Force at 5,000 PSI (lbs.) Pull	Bore ø (in.)	Rod ø (in.)	Stroke (in.)	Effective Area (sq. in.) Push	Effective Area (sq. in.) Pull	Oil Capacity (cu. in.) Push	Oil Capacity (cu. in.) Pull
010-021-111	2,220	1,400	0.750	0.437	0.630	0.442	0.292	0.279	0.184
010-021-114	2,220	1,400	0.750	0.437	1.500	0.442	0.292	0.663	0.438
010-022-222	3,900	2,390	1.000	0.625	0.790	0.785	0.478	0.620	0.378
010-022-225	3,900	2,390	1.000	0.625	2.000	0.785	0.478	1.570	0.956
010-023-333	8,800	4,900	1.500	1.000	1.000	1.767	0.982	1.767	0.982
010-023-335	8,800	4,900	1.500	1.000	2.000	1.767	0.982	3.534	1.964

Dimension Chart – Single & Double-acting Threaded Cylinders

Cat. no. Single Acting	Cat. no. Double Acting	A (S.ACT.)		Dimensions (In Inches) B	C	C1	D	D1	E	F	G	K	L	M	P	S	T
–	010-021-111	–	3.444	2.814	2.494	0.625	1.750-16UN	1.564	0.437	1.375	SAE#4	1/4-20UNC	0.422	0.390	0.200	0.375	0.500
010-011-113	010-021-114	4.064	5.184	3.684	3.364	0.625	1.750-16-UN	1.564	0.437	1.375	SAE#4	1/4-20UNC	0.422	0.390	0.200	0.375	0.500
010-012-221	010-022-222	3.465	3.985	3.195	2.875	0.625	1.875-16UN	1.730	0.625	1.610	SAE#4	5/16-24UNC	0.530	0.390	0.200	0.500	0.625
010-012-224	010-022-225	5.005	6.405	4.405	4.085	0.625	1.875-16UN	1.730	0.625	1.610	SAE#4	5/16-24UNC	0.530	0.390	0.200	0.500	0.625
010-013-332	010-023-333	3.917	4.620	3.620	3.125	0.690	2.500-16UN	2.375	1.000	2.250	SAE#4	1/2-13UNC	0.800	0.550	0.375	0.835	0.625
010-013-334	010-023-335	5.067	6.620	4.620	4.125	0.690	2.500-16UN	2.350	1.000	2.250	SAE#4	1/2-13UNC	0.800	0.550	0.375	0.835	0.625

Models 010-210-XXX, 010-211-XXX, 010-212-XXX

The single-action, spring-return hydraulic power cylinders are small pistons that can be used singly or combined. They offer tremendous force in a small, easily mounted package that can be used in any attitude and requires only a single inlet port. They are often used grouped together by a common manifold to provide as much force as needed for the operation. For a relatively small volume of oil, they provide exceptional exerting force, and are generally the best choice if stroke lengths can be kept short.

Features:

- Threaded body for easy mounting
- Small size permits “low profile” workholding
- Accessories available for easy mounting
- Available in metric or inch sizes (Metric on special request)
- Hardened piston and rod
- Single-acting for simple plumbing
- Wide variety of sizes and strokes
- Pressure capacity up to 5,000 PSIG, provided piston does not bottom out

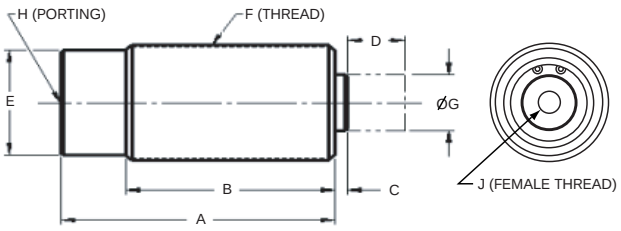

Model no.	Dimensions (In Inches)								
	A	B	C	D	E	F	G	H	J
010-210-400	1.66	1.41	0.19	0.22	0.44 Hex	1/2-20	0.15	SAE #2	–
010-210-501	2.25	1.97	0.22	0.31	0.62 Hex	3/4-16	0.22	SAE #4	–
010-210-702	2.56	2.31	0.31	0.50	0.75 Hex	1-12	0.24	SAE #4	–
010-211-002	2.63	2.25	0.13	0.50	1.00 Hex	1 5/16-16	0.64	SAE #4	1/4-20
010-211-004	3.63	3.25	0.12	1.00	1.00 Hex	1 5/16-16	0.64	SAE #4	1/4-20
010-211-502	2.94	2.57	0.13	0.50	1.50 Hex	1 7/8-16	1.00	SAE #4	5/16-18
010-211-504	4.59	4.22	0.14	1.00	1.50 Hex	1 7/8-16	1.00	SAE #4	5/16-18
010-212-004	4.13	3.76	0.13	1.00	2.00 Hex	2 1/2-16	1.50	SAE #4	5/16-18

Threaded Cylinders – SAE Ports

Model no.	SAE Ports	Threaded Body	Stoke	Force at 3,000 PSIG	Oil Displacement	Effective Area For Clamping	Jamnuts
010-210-400	#2	1/2-20	0.22	279 lbs.	0.024 cu. in.	0.110	Furnished
010-210-501	#4	3/4-16	0.31	588 lbs.	0.061 cu. in.	0.196	Furnished
010-210-702	#4	1-12	0.50	1,326 lbs.	0.221 cu. in.	0.442	Furnished
010-211-002	#4	1 5/16-16	0.50	2,355 lbs.	0.393 cu. in.	0.785	Optional
010-211-004	#4	1 5/16-16	1.00	2,355 lbs.	0.785 cu. in.	0.785	Optional
010-211-502	#4	1 7/8-16	0.50	5,301 lbs.	0.884 cu. in.	1.767	Optional
010-211-504	#4	1 7/8-16	1.00	5,301 lbs.	1.767 cu. in.	1.767	Optional
010-212-004	#4	2 1/2-16	1.00	9,423 lbs.	3.142 cu. in.	3.142	Optional

Flange Mount
052-Series

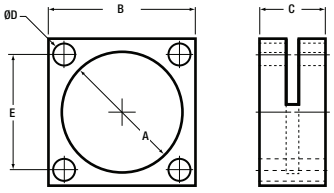

Flange Mount

Model no.	Dimensions (In Inches) A	B	C	øD	E
052-106-160	1 1/16-16 UN 2B	1.37	0.50	0.22	1.030
052-112-160	1 1/8-16 UN 2B	1.50	0.50	0.22	1.120
052-125-120	1 1/4-12 UN 2B	1.62	0.50	0.27	1.200
052-131-160	1 5/16-16 UN 2B	1.69	0.50	0.27	1.250
052-137-160	1 3/8-16 UN 2B	1.75	0.50	0.27	1.340
052-137-180	1 3/8-18 UN 2B	1.75	0.50	0.27	1.340
052-150-160	1 1/2-16 UN 2B	1.88	0.75	0.27	1.480
052-175-160	1 3/4-16 UN 2B	2.25	0.75	0.34	1.770
052-187-160	1 7/8-16 UN 2B	2.25	1.00	0.34	1.770
052-225-160	2 1/4-16 UN 2B	2.63	1.00	0.34	1.970
052-250-160	2 1/2-16 UN 2B	3.00	1.00	0.34	2.170
052-262-200	2 5/8-20 UN 2B	3.38	1.25	0.40	2.375
052-312-160	3 1/8-16 UN 2B	3.88	1.25	0.40	2.780

Jam Nut
051-Series

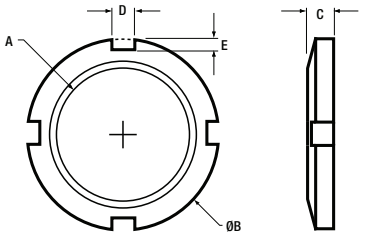

Jam Nuts

Model no.	Dimensions (In Inches) A	B	C	D	E
051-106-160	1 1/16-16 UN 2B	1.438	0.31	0.188	0.188
051-112-160	1 1/8-16 UN 2B	1.500	0.31	0.250	0.250
051-125-120	1 1/4-12 UN 2B	1.625	0.31	0.250	0.250
051-131-160	1 5/16-16 UN 2B	1.688	0.31	0.250	0.250
051-137-160	1 3/8-16 UN 2B	1.875	0.31	0.250	0.250
051-137-180	1 3/8-18 UN 2B	1.875	0.31	0.250	0.250
051-150-160	1 1/2-16 UN 2B	2.000	0.38	0.275	0.275
051-175-160	1 3/4-16 UN 2B	2.500	0.38	0.312	0.312
051-187-160	1 7/8-16 UN 2B	2.625	0.38	0.312	0.312
051-225-160	2 1/4-16 UN 2B	3.000	0.50	0.312	0.312
051-250-160	2 1/2-16 UN 2B	3.250	0.50	0.312	0.312
051-262-200	2 5/8-20 UN 2B	3.375	0.50	0.375	0.375
051-312-160	3 1/8-16 UN 2B	3.875	0.50	0.375	0.375

Jam Nut
Model 70975

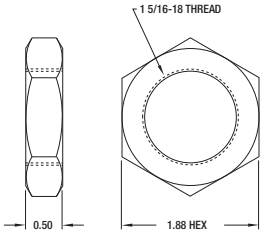

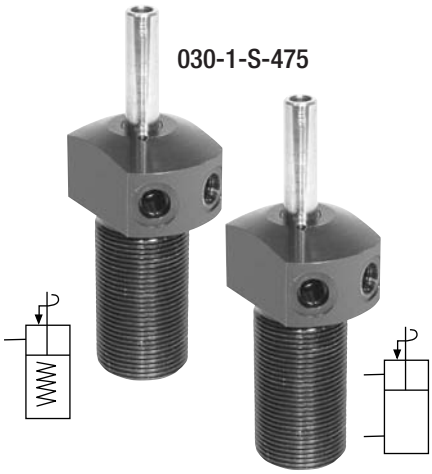

The DE-STA-CO StrongHold *SELECT* Threaded Body Swing/Pull Clamps are available in both single-acting and double-acting versions. They incorporate the latest hydraulic swing clamp technology. The top port design allows easy access for plumbing connections. They are available with 90° left or right hand rotation, or with guided straight pull. The breather port on single-acting models may be replaced with tubing for remote venting. The optional arms clamp securely to the piston rod to reduce fatigue and deflection. Arms may be easily modified or custom arms may be substituted.

SELECT Features Include:

- Advanced seals and wipers utilize a special, highly wear-resistant construction for long cycle life and 5,000 PSI operation
- Triple track piston rod design for field adjustable swing direction
- Hardened and hard chrome plated piston rod for increased strength and wear resistance
- Advanced metal treated body for superior wear and corrosion resistance
- MRO interchange design
- Straight pull capacity 600 lbs. at 5,000 PSI max

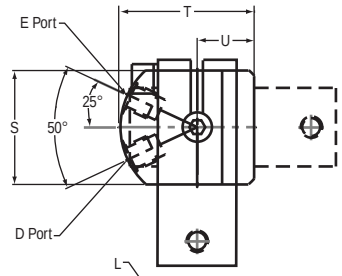

For 475 lb. Swing/Pull Clamp Arms see Page 15.27

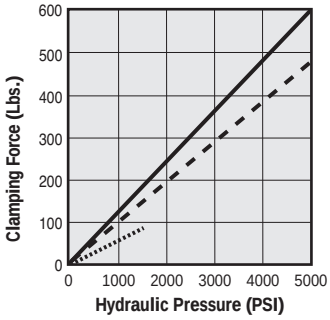

Performance

- With 031-L-475 Arm (3.25" long)
- With 0-31-S-475 Arm (1.22" long)
- Straight Pull

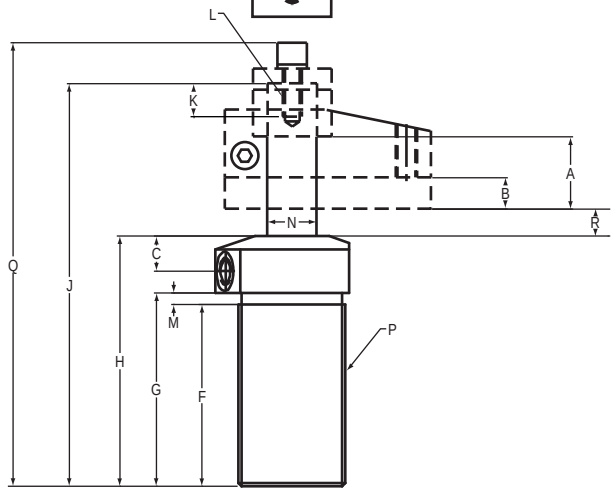

Cat. no.	Specifications							Max Oil Flow in3/min
	Oper.	Swing Direction	*Force (lbs.)	Eff. Area (sq. In.) Clamp	Eff. Area (sq. In.) Unclamp	Oil Cap. (cu. In.) Clamp	Oil Cap. (cu. In.) Unclamp	
030-1-S-475 (-X)	Single-Acting	Left Hand (Counter Clockwise) Right Hand (Clockwise) Straight Pull ▲	475	0.12	–	0.08	–	12
030-1-D-475 (-X)	Double-acting				0.24		0.15	

▲ Additional swing directions available upon request

Ordering Notes:

Left hand swing (ccw) is standard – no suffix
Add –R suffix for right hand swing
Add –S suffix for straight guided pull
We will assemble and mark them that way.

Cat. no.	Specifications																		
	A Total Stroke	B Clamping Stroke	C	D Clamp Port	E Δ Unclamp Port	F	G	H	J	K	L	M	N	P	Q	R	S	T	U
030-1-S-475	0.65	0.210	0.59	SAE-2	SAE-2	1.929	2.086	3.07	4.429	0.8	M6x1	0.157	0.393	1-1/8-16UN	4.96	0.495	1.3	1.55	0.61
030-1-D-475	0.65	0.32	0.59																

NOTE: *With 1.22" long arm at 5,000 PSI maximum operating pressure.
ΔDo not pressurize – single-acting only
†See page 15.35 for arms, accessories and custom arm mounting

Hyd. Swing/Pull Clamps – 1,100 lb.

StrongHold *SELECT*

The DE-STA-CO StrongHold *SELECT* Threaded Body Swing/Pull Clamps are available in both single-acting and double-acting versions. They incorporate the latest hydraulic swing clamp technology. The top port design allows easy access for plumbing connections.

They are available with 90° left or right hand rotation, or with guided straight pull. The breather port on single-acting models may be replaced with tubing for remote venting. The optional arms clamp securely to the piston rod to reduce fatigue and deflection. Arms may be easily modified or custom arms may be substituted.

SELECT Features Include:

- Advanced seals and wipers utilize a special, highly wear-resistant construction for long cycle life and 5,000 PSI operation
- Triple track piston rod design for field adjustable swing direction
- Hardened and hard chrome plated piston rod for increased strength and wear resistance
- Advanced metal treated body for superior wear and corrosion resistance
- MRO interchange design
- Straight pull capacity
- 1,400 lbs. at 5,000 PSI max.

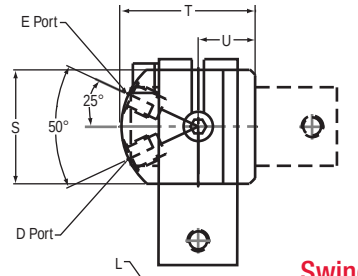

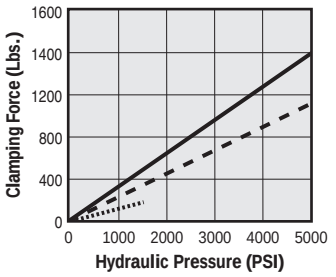

Performance

- With 031-L-1100 Arm (5.31" long)
- With 031-S-1100 Arm (1.89" long)
- Straight Pull

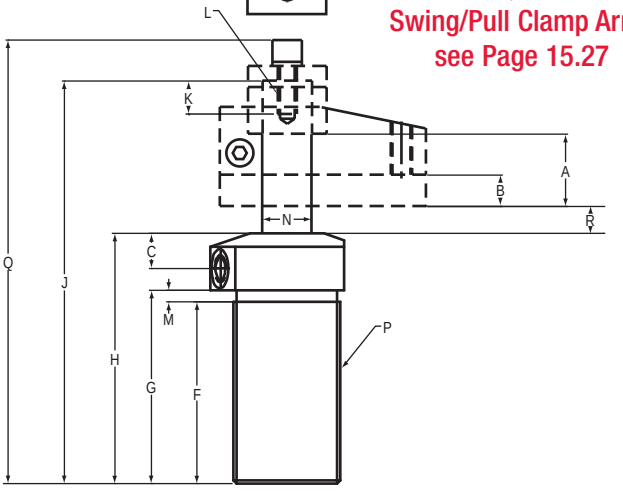

For 1,100 lb. Swing/Pull Clamp Arms see Page 15.27

Cat. no.	Specifications							Max Oil Flow in³/min
	Oper.	Swing Direction	*Force (lbs.)	Eff. Area (sq. in.) Clamp	Eff. Area (sq. in.) Unclamp	Oil Cap. (cu. in.) Clamp	Oil Cap. (cu. in.) Unclamp	
030-1-S-1100 (-X)	Single-Acting	Left Hand (Counter Clockwise) Right Hand (Clockwise) Straight Pull ▲	1100	0.28	–	0.25	–	25
030-1-D-1100 (-X)	Double-acting				0.59		0.52	

▲ Additional swing directions available upon request

Ordering Notes:

Left hand swing (ccw) is standard – no suffix
Add –R suffix for right hand swing
Add –S suffix for straight guided pull
We will assemble and mark them that way.

Cat. no.	Specifications																		
	A Total Stroke	B Clamping Stroke	C	D Clamp Port	E Unclamp Port Δ	F	G	H	J	K	L	M	N	P	Q	R	S	T	U
030-1-S-1100	0.89	0.39	0.6	SAE-4	SAE-4	2.4	2.6	3.58	5.305	0.94	M8 x 1.25	0.196	0.629	1-3/8-18UN	5.965	0.400	1.5	1.87	0.75
030-1-D-1100																			

NOTE: *With 1.89" long arm at 5,000 PSI maximum operating pressure.
ΔDo not pressurize – single-acting only
†See page 15.35 for arms, accessories and custom arm mounting

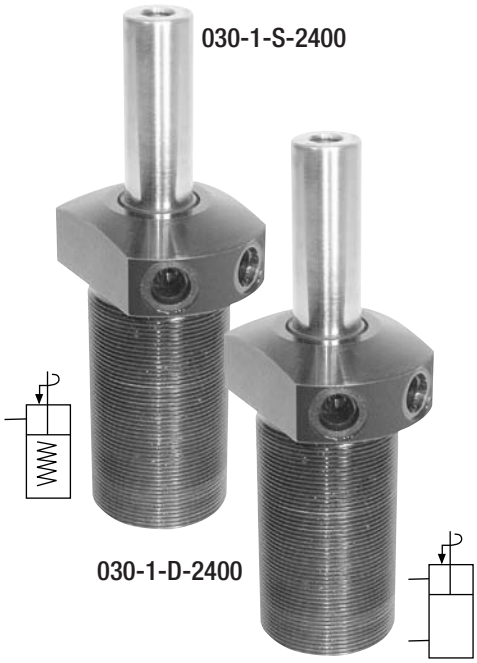

The DE-STA-CO StrongHold *SELECT* Threaded Body Swing/Pull Clamps are available in both single-acting and double-acting versions. They incorporate the latest hydraulic swing clamp technology. The top port design allows easy access for plumbing connections.

They are available with 90° left or right hand rotation, or with guided straight pull. The breather port on single-acting models may be replaced with tubing for remote venting. The optional arms clamp securely to the piston rod to reduce fatigue and deflection. Arms may be easily modified or custom arms may be substituted.

SELECT Features Include:

- Advanced seals and wipers utilize a special, highly wear-resistant construction for long cycle life and 5,000 PSI operation
- Triple track piston rod design for field adjustable swing direction
- Hardened and hard chrome plated piston rod for increased strength and wear resistance
- Advanced metal treated body for superior wear and corrosion resistance
- MRO interchange design
- Straight pull capacity
- 3,150 lbs. at 5,000 PSI max.

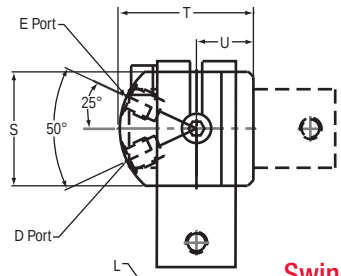

For 2,400 lb. Swing/Pull Clamp Arms see Page 15.27

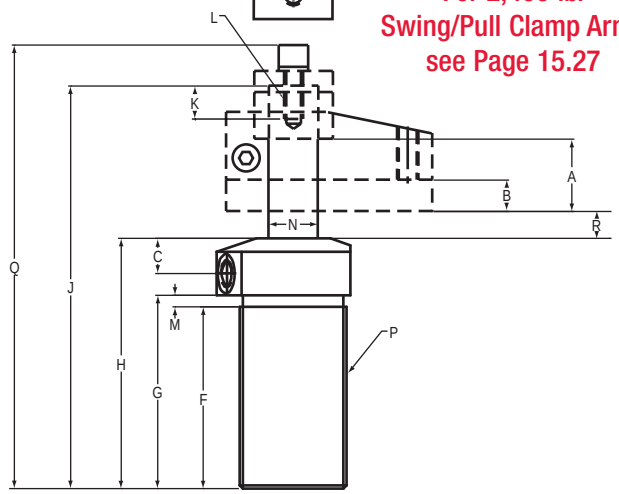

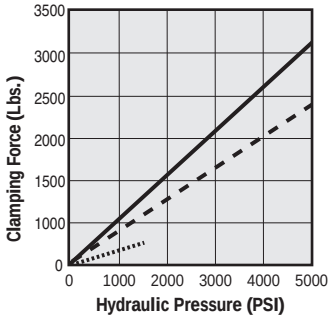

Performance

- With 031-L-2400 Arm (6.36" long)
- With 031-S-2400 Arm (2.43" long)
- Straight Pull

Cat. no.	Specifications							Max Oil Flow in³/min
	Oper.	Swing Direction	*Force (lbs.)	Eff. Area (sq.iln.) Clamp	Eff. Area (sq.iln.) Unclamp	Oil Cap. (cu. in.) Clamp	Oil Cap. (cu. in.) Unclamp	
030-1-S-2400 (-X)	Single-Acting	Left Hand (Counter Clockwise)	2400	0.63	–	0.7	–	100
030-1-D-2400 (-X)	Double-acting	Right Hand (Clockwise) Straight Pull ▲			1.23		1.40	

▲ Additional swing directions available upon request

Ordering Notes:

Left hand swing (ccw) is standard – no suffix
Add –R suffix for right hand swing
Add –S suffix for straight guided pull
We will assemble and mark them that way.

Cat. no.	Specifications																		
	A Total Stroke	B Clamping Stroke	C	D Clamp Port		F	G	H	J	K	L	M	N	P	Q	R	S	T	U
030-1-S-2400	1.12	0.5	0.62	SAE-4	SAE-4	3.18	3.38	4.38	6.8	1.28	M10x1.5	0.196	0.87	1-7/8-16UN	7.543	0.517	2.0	2.38	1.0
030-1-D-2400																			

NOTE: *With 2.43" long arm at 5,000 PSI maximum operating pressure.
ΔDo not pressurize – single-acting only
†See page 15.35 for arms, accessories and custom arm mounting

Hyd. Swing/Pull Clamps – 4,000 lb.

NEW

StrongHold *SELECT*

The DE-STA-CO StrongHold *SELECT* Threaded Body Swing/Pull Clamps are available in both single-acting and double-acting versions. They incorporate the latest hydraulic swing clamp technology. The top port design allows easy access for plumbing connections.

They are available with 90° left or right hand rotation, or with guided straight pull. The breather port on single-acting models may be replaced with tubing for remote venting. The optional arms clamp securely to the piston rod to reduce fatigue and deflection. Arms may be easily modified or custom arms may be substituted.

SELECT Features Include:

- Advanced seals and wipers utilize a special, highly wear-resistant construction for long cycle life and 5,000 PSI operation
- Triple track guide rod design incorporates three balls engaged in three tracks for increased cycle life. Swing direction can be field converted by replacing the guide rod
- Hardened and hard chrome plated piston rod for increased strength and wear resistance
- Advanced metal treated body for superior wear and corrosion resistance
- MRO interchange design
- Straight pull capacity 5,500 lbs. at 5,000 PSI max.

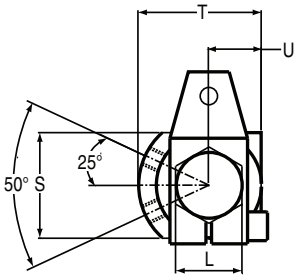

For 4,000 lb. Swing/Pull Clamp Arms see Page 15.28

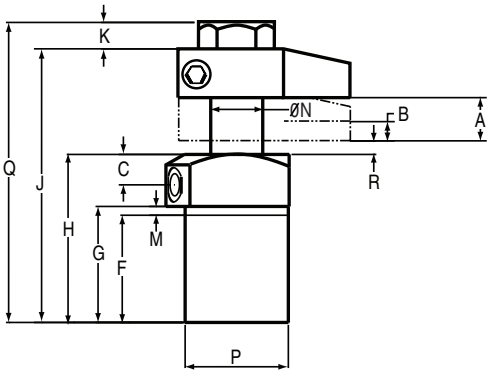

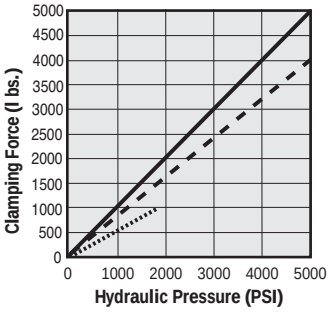

Performance

- With 031-L-4000 Arm (7.01" long)
- With 031-S-4000 Arm (2.75" long)
- Straight Pull

Cat. no.	Specifications							Max Oil Flow in³/min
	Oper.	Swing Direction	*Force (lbs.)	Eff. Area (sq. in.) Clamp	Eff. Area (sq. in.) Unclamp	Oil Cap. (cu. in.) Clamp	Oil Cap. (cu. in.) Unclamp	
030-1-S-4000(-X)	Single-Acting	Left Hand (Counter Clockwise)	4000	1.10	–	1.22	–	140
030-1-D-4000(-X)	Double-acting	Right Hand (Clockwise) Straight Pull			2.35		2.60	

Ordering Notes:

Left hand swing (ccw) is standard – no suffix
Add –R suffix for right hand swing
Add –S suffix for straight guided pull
We will assemble and mark them that way.

Cat. no.	Specifications																		
	A Total Stroke	B Clamping Stroke	C	D Clamp Port		F	G	H	J	K	L	M	N	P	Q	R	S	T	U
030-1-S-4000	1.07	0.45	0.75	SAE#4	SAE#4	2.70	2.83	4.09	6.67	0.64	1.61	0.14	1.26	2-1/2-16UN	7.30	0.33	2.56	2.99	1.28
030-1-D-4000																			

NOTE: *With 2.75" long arm at 5,000 PSI maximum operating pressure.
ΔDo not pressurize – single-acting only
†See page 15.27 for arms, accessories and custom arm mounting

Hyd. Swing/Pull Clamp 475-2,400 lb. Arms

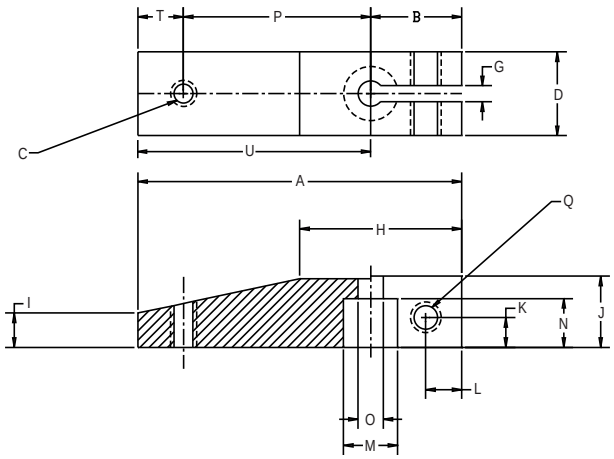

Custom built arms of any length must clamp to the swing/pull clamp's piston rod in a manner similar to the DE-STA-CO arms or some derating of the clamp will be necessary.

The design feature "K," in the chart and drawing at the bottom of this page, is recommended for all applications of custom, single arms. See the accompanying chart for design details. In applications where there is no bending stress being transferred into the piston rod (like push/pull linkages and equalizing double arms), this design detail may be eliminated. In these applications, the clamp's full capacity (referred to as "straight pull" capacity) is available.

Swing/Pull Clamp Arm

Cat. no.	Specifications A	B	C	D	G	H	I	J	K	L	M	N	O	P	Q	T	U	Weight (lbs.)
031-S-475	1.929	0.709	M6	0.63	0.126	1.139	0.394	0.630	0.236	0.217	0.394	0.394	0.256	0.984	M6	0.236	1.220	0.159
031-L-475	3.959	0.709	–	0.63		1.166	0.394	0.630	0.236	0.217	0.394	0.394	0.256	–	M6	–	3.250	0.348
031-S-1100	2.598	0.709	M8	0.748		1.294	0.433	0.748	0.236	0.217	0.630	0.472	0.33	1.575	M6	0.315	1.889	0.286
031-L-1100	6.019	0.709	–	0.748		1.412	0.433	0.748	0.236	0.217	0.630	0.472	0.335	–	M6	–	5.310	0.721
031-S-2400	3.268	0.866	M10	1.125		1.459	0.633	1.00	0.236	0.217	0.866	0.709	0.413	1.969	M8	0.433	2.402	0.634
031-L-2400	7.226	0.866	–	1.125		1.696	0.633	1.00	0.236	0.217	0.866	0.709	0.413	–	M8	–	6.360	1.564

IMPORTANT: ***Any clamp using a modified or custom arm that is longer or heavier than DE-STA-CO's standard arms must be derated to prevent internal damage.***

Do not exceed the maximum speed and pressure ratings for DE-STA-CO's standard arms. For maximum hydraulic pressure and speed ratings, see the accompanying charts

Do not use meter-out circuitry for controlling double-acting clamp speeds

Contact DE-STA-CO if further design assistance is required

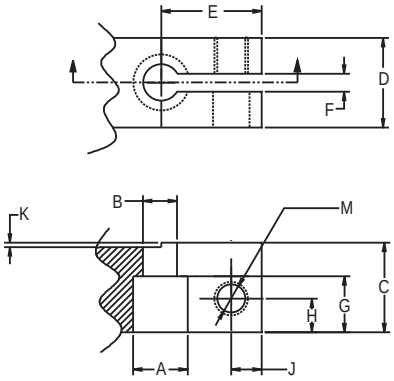

Custom Arm Mounting Dimensions for Swing/Pull Clamps

Shaft Dia.	Specifications A	B	C	D	E	F	G	H	J	K	M
10 MM	0.394	0.256	0.63	0.63	0.709	1.26	0.394	0.236	0.217	0.30	M6 x 1.0
16 MM	0.630	0.335	0.748	0.748	0.709		0.472	0.236	0.217		M6 x 1.0
22 MM	0.866	0.413	1.00	1.00	0.866		0.709	0.236	0.217		M8 x 1.25

031-S-475 • 031-L-475

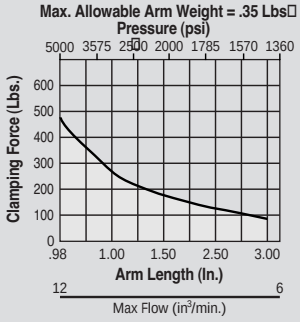

031-S-1100 • 031-L-1100

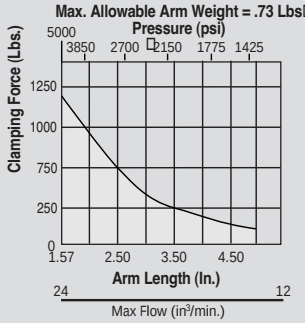

031-S-2400 • 031-L-2400

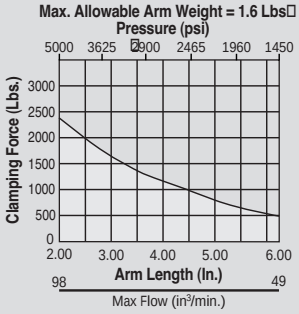

Chart Legend

Maximum Length / Pressure

Operating Range

Clamps must operate at or below maximum arm length/pressure curve:

To approximate clamping force with any arm at less than maximum pressure:

FORCE = P x A x [1-(P/M x .23)]

P = Hyd. system operating pressure (PSI)
A = Clamp effective area (sq. in.)
M = Max. rated pressure of chosen arm length (PSI)

Hyd. Swing/Pull Clamp 4,000 lb. Arms

StrongHold *SELECT*

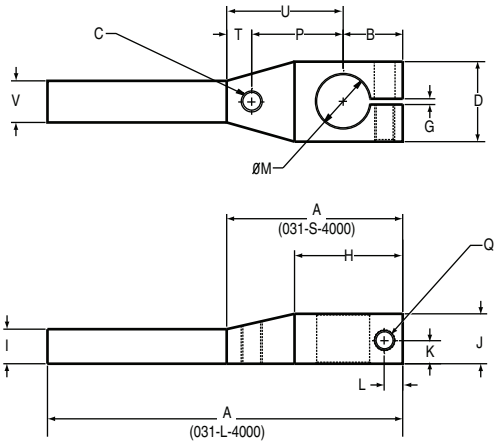

Custom built arms of any length must clamp to the swing/pull clamp's piston rod in a manner similar to the DE-STA-CO arms or some derating of the clamp will be necessary.

The design feature "K," in the chart and drawing at the bottom of this page, is recommended for all applications of custom, single arms. See the accompanying chart for design details. In applications where there is no bending stress being transferred into the piston rod (like push/pull linkages and equalizing double arms), this design detail may be eliminated. In these applications, the clamp's full capacity (referred to as "straight pull" capacity) is available.

	Specifications																
Cat no.	A	B	C	D	G	H	I	J	K	L	M	P	Q	T	U	V	Weight (lbs.)
031-S-4000	4.17	1.42	1/2-13	1.89	0.138	2.56	0.83	1.18	0.55	0.43	1.26	2.17	M12	0.58	2.75	0.98	1.80
031-L-4000	8.43	1.42	1/2-13	1.89	0.138	2.56	0.83	1.18	0.55	0.43	1.26	–	M12	–	7.01	0.98	2.80

IMPORTANT: ***Any clamp using a modified or custom arm that is longer or heavier than DE-STA-CO's standard arms must be derated to prevent internal damage.***

Do not exceed the maximum speed and pressure ratings for DE-STA-CO's standard arms
For maximum hydraulic pressure and speed ratings, see the accompanying charts
Do not use meter-out circuitry for controlling double-acting clamp speeds
Contact DE-STA-CO if further design assistance is required

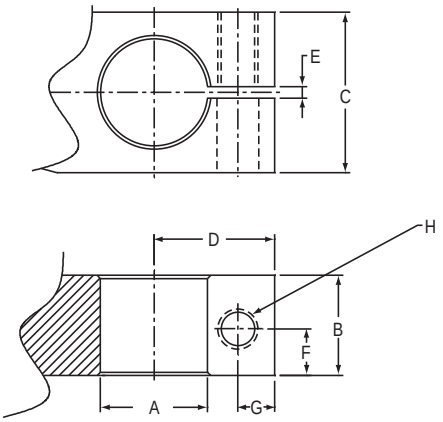

Custom Arm Mounting Dimensions for 4,000 lb. Swing/Pull Clamps

	Specifications							
Cat no.	A	B	C	D	E	F	G	H
32MM	1.26	1.18	1.89	1.42	0.138	0.55	0.43	M12 x 1.75

031-S-4000 • 031-L-4000

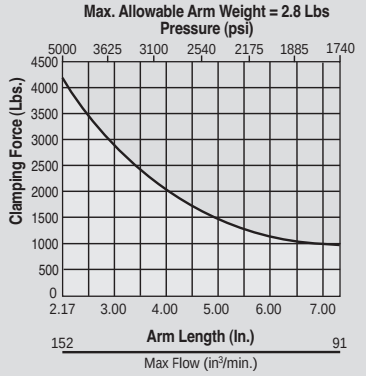

Chart Legend

Maximum Length / Pressure
Operating Range

Clamps must operate at or below maximum arm length/pressure curve:

To approximate clamping force with any arm at less than maximum pressure:

FORCE = P x A x [1-(P/M x .23)]

P = Hyd. system operating pressure (PSI)
A = Clamp effective area (sq. in.)
M = Max. rated pressure of chosen arm length (PSI)

Flange Mounting Bracket

DE-STA-CO's StrongHold *SELECT* flange mounting brackets allow you to secure your swing/pull clamps.

Swing clamps can also be screwed into a threaded hole and locked in position with a jam nut. Two jam nuts may also be used to secure the clamps in an unthreaded hole.

Flange Mount
052-Series

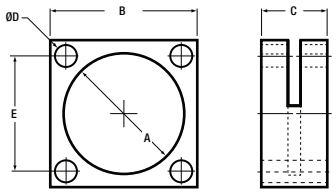

Flange Mount

Model no.	Dimensions (In Inches) A	B	C	øD	E
052-106-160	1 1/16-16 UN 2B	1.37	0.50	0.22	1.030
052-112-160	1 1/8-16 UN 2B	1.50	0.50	0.22	1.120
052-125-120	1 1/4-12 UN 2B	1.62	0.50	0.27	1.200
052-131-160	1 5/16-16 UN 2B	1.69	0.50	0.27	1.250
052-137-160	1 3/8-16 UN 2B	1.75	0.50	0.27	1.340
052-137-180	1 3/8-18 UN 2B	1.75	0.50	0.27	1.340
052-150-160	1 1/2-16 UN 2B	1.88	0.75	0.27	1.480
052-175-160	1 3/4-16 UN 2B	2.25	0.75	0.34	1.770
052-187-160	1 7/8-16 UN 2B	2.25	1.00	0.34	1.770
052-225-160	2 1/4-16 UN 2B	2.63	1.00	0.34	1.970
052-250-160	2 1/2-16 UN 2B	3.00	1.00	0.34	2.170
052-262-200	2 5/8-20 UN 2B	3.38	1.25	0.40	2.375
052-312-160	3 1/8-16 UN 2B	3.88	1.25	0.40	2.780

Jam Nut
051-Series

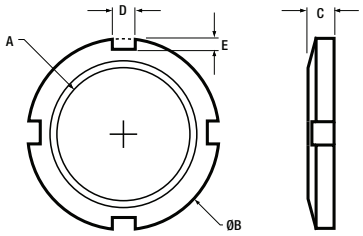

Jam Nuts

Model no.	Dimensions (In Inches) A	B	C	D	E
051-106-160	1 1/16-16 UN 2B	1.438	0.31	0.188	0.188
051-112-160	1 1/8-16 UN 2B	1.500	0.31	0.250	0.250
051-125-120	1 1/4-12 UN 2B	1.625	0.31	0.250	0.250
051-131-160	1 5/16-16 UN 2B	1.688	0.31	0.250	0.250
051-137-160	1 3/8-16 UN 2B	1.875	0.31	0.250	0.250
051-137-180	1 3/8-18 UN 2B	1.875	0.31	0.250	0.250
051-150-160	1 1/2-16 UN 2B	2.000	0.38	0.275	0.275
051-175-160	1 3/4-16 UN 2B	2.500	0.38	0.312	0.312
051-187-160	1 7/8-16 UN 2B	2.625	0.38	0.312	0.312
051-225-160	2 1/4-16 UN 2B	3.000	0.50	0.312	0.312
051-250-160	2 1/2-16 UN 2B	3.250	0.50	0.312	0.312
051-262-200	2 5/8-20 UN 2B	3.375	0.50	0.375	0.375
051-312-160	3 1/8-16 UN 2B	3.875	0.50	0.375	0.375

Edge Clamp

Model 70626

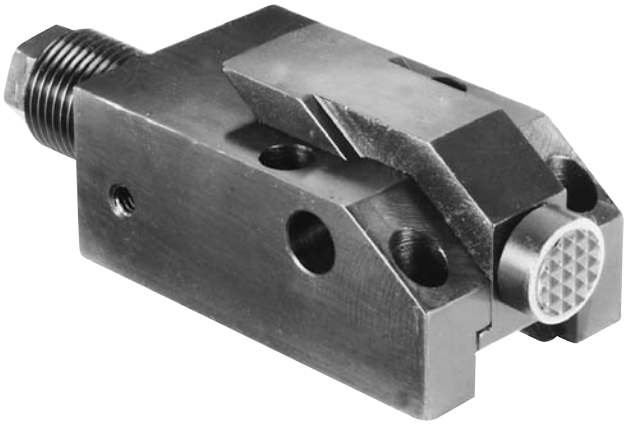

Hydraulic Edge Clamps offer fast part load/unload in drilling, milling, planing, grinding and other surfacing operations on either CNC or Bridgeport-type machines.

These low profile clamps simultaneously apply horizontal and vertical clamping force against the sides of a workpiece, effectively allowing cutter access to an entire top surface. Maximum horizontal force ranges up to 1,520 lbs. and vertical force is up to 1,220 lbs.

Features:

- Highly-compact design
- Positive spring return and replaceable grippers
- Powered using shop air with an air/hydraulic booster

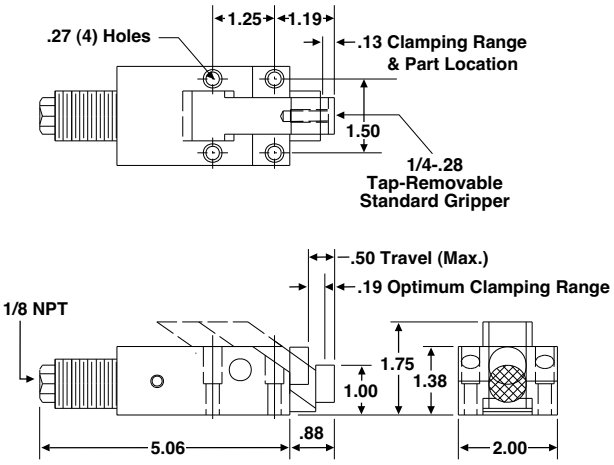

Hydraulic Pressure	Clamp Force at 5/16" Horizontal Stroke	
	Horizontal	Vertical
500 PSIG	190 lbs.	170 lbs.
1,000 PSIG	390 lbs.	350 lbs.
1,500 PSIG	620 lbs.	520 lbs.
2,000 PSIG	850 lbs.	700 lbs.
2,500 PSIG	1,060 lbs.	870 lbs.
3,000 PSIG	1,300 lbs.	1,050 lbs.
3,500 PSIG	1,520 lbs.	1,220 lbs.

Specifications:

Maximum Operating Pressure (Hydraulic)	3500 PSIG
Minimum Operating Pressure (Hydraulic)	500 PSIG
Displacement	.139 in.^{3}
Piston Effective Area	.442 in.^{2}
Horizontal Stroke (includes .13" clamping range)	.31 in.
Associated Vertical Travel at Horizontal Stroke	.22 in.

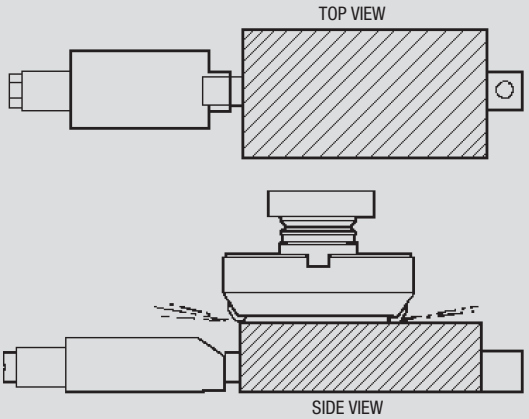

By inserting a rod through the hollow piston, these cylinders can be used to push or pull depending on the orientation of the ram. They will actuate a rod of any length or shape and are extremely effective in translating power to a remote location. Greater forces are generated in these thru-hole rams because of their larger piston area.

Features:

- Larger piston diameter for greater clamping forces
- Hardened steel piston and rod
- Single-acting for simple plumbing
- Optional threaded inserts
- Optional mounting plate (permits mounting ram with a single cap screw)

Symbol

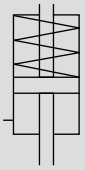

Model no.	RAM I.D.*	Port	Stoke	Oil Displacement	Force at 3,000 PSIG	Dimensions		
						A	B	C
020-011-011DE	0.38	SAE #2	0.38	0.547 cu. in.	4,380 lbs.	2.13	1.88	2.25
020-012-021DE	0.50	SAE #4	0.50	1.35 cu. in.	8,100 lbs.	3.00	2.63	2.88
020-013-031DE	0.63	SAE #4	0.63	2.51 cu. in.	12,066 lbs.	3.25	3.00	3.63

* Clearance for rod or bolt of given dimension.

Maximum input pressure 3,500 PSIG.

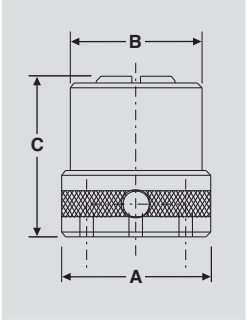

Accessories

All size thru-hole rams are supplied with a thru-hole insert threaded into the top. Optional threaded inserts, inch or metric, are also available.

RAM no.	Thru-Hole Insert (Supplied)
020-011-011DE	705384
020-012-021DE	705512
020-013-031DE	705634

To determine how much force is needed to replace a manual clamp, use this chart as a guide

Loads Trasmitted by Various Diameter Screws		
Bolt Size	Wrench Length	F-lbs. (Average)
1/4 UNF	4.00	2,400 lbs.
1/4 UNF	4.00	1,920 lbs.
3/8 UNF	5.75	3,000 lbs.
3/8 UNF	5.75	2,920 lbs.
1/2 UNF	8.00	4,200 lbs.
1/2 UNF	8.00	3,640 lbs.
5/8 UNF	9.00	5,600 lbs.
5/8 UNF	9.00	5,600 lbs.
3/4 UNF	9.00	4,800 lbs.
3/4 UNF	11.00	4,200 lbs.
7/8 UNF	12.00	5,400 lbs.

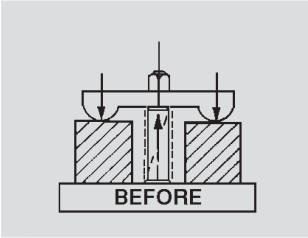

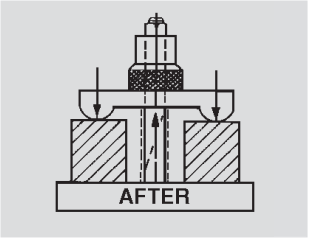

A thru-hole ram easily converts a manual strap clamp into an automatic hydraulic powered clamp. Usually a longer bolt is the only part needed to make this conversion.

Thru-Hole Hydraulic Rams

Calculation of Forces Using Straps and Levers

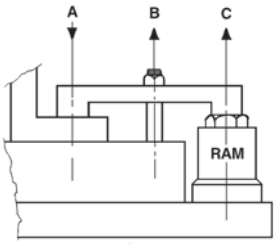

FIGURE #1

Figure #1
When the distance AB is equal to the distance BC the force upward from Model 020-011-011DE Ram "C" is equal to the downward force "A" on the part.

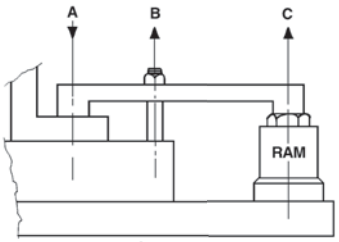

FIGURE #2

Figure #2
The downward force "A" is equal to the upward force "C" times a ratio of the distance BC:AB.

Example:

AB = 2", BC = 4", Force "C" = 1,000 lbs.

$$\text{Force "A"} = \text{Force "C"} \times \frac{BC}{AB}$$

$$\text{"A"} = 1{,}000 \text{ lbs.} \times \frac{4}{2}$$

"A" = 2,000 lbs.

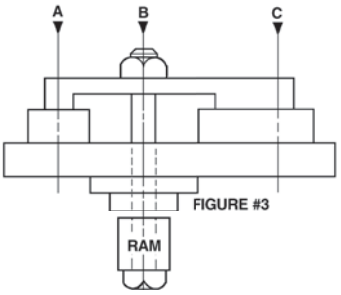

FIGURE #3

Figure #3
When Force "B" from Model 020-011-011DE Hollow Bore is divided between "A" & "C", the forces at "A" & "C" are in inverse ratio to the distance AB & BC respectively.

$$\text{Force "A"} = \text{Force "B"} \times \frac{BC}{AB}$$

$$\text{Force "C"} = \text{Force "B"} \times \frac{AB}{AC}$$

Example:

AB = 2", BC = 4," Force "B" = 1,000 lbs.

$$\text{Force "A"} = 1{,}000 \text{ lbs.} \times \frac{4}{6} = 666.7 \text{ lbs.}$$

$$\text{Force "C"} = 1{,}000 \text{ lbs.} \times \frac{2}{6} = 333.3 \text{ lbs.}$$

Power Sources

Thru-hole Rams can be powered by automatic pumps, hand pumps, boosters or existing machine hydraulics.

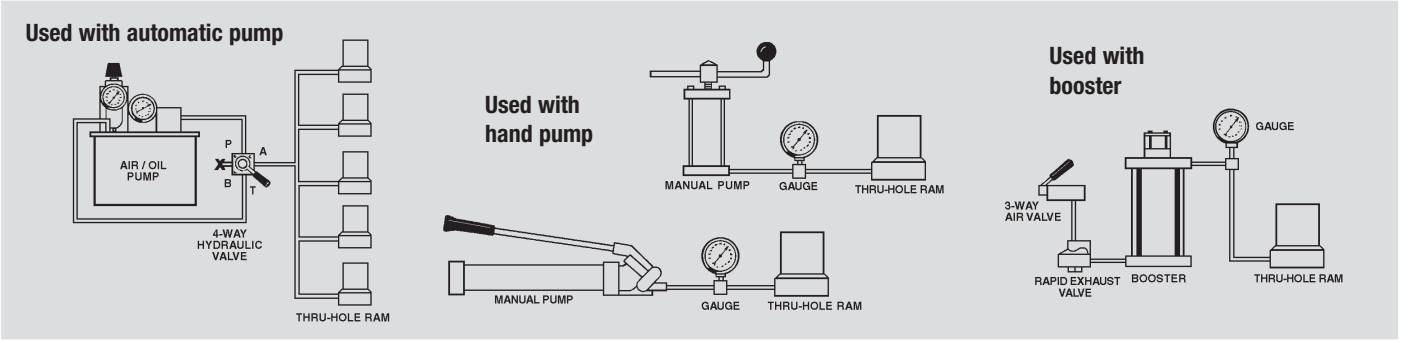

Multiple Uses

Thru-hole Rams can be used to push or pull depending on the position of the ram.

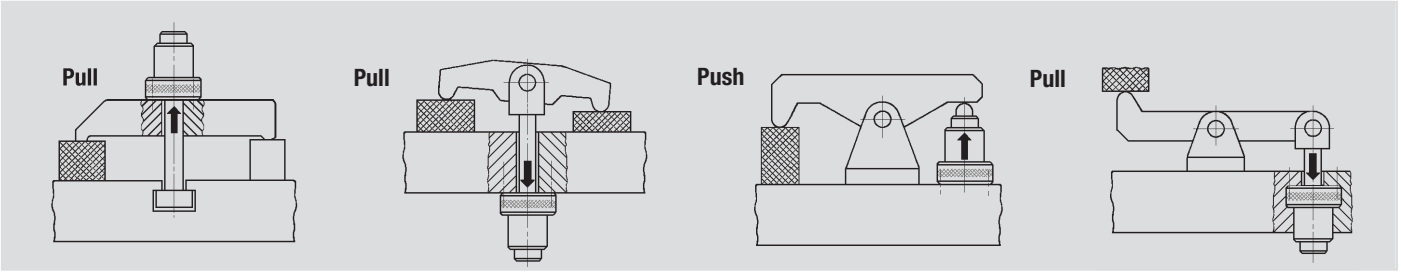

The DE-STA-CO Air/Hydraulic Power Booster converts normal shop-line air pressure to high-pressure hydraulic power. The six models available provide oil displacements ranging from 1 cu. in. to 12 cu. in. per stroke.

With the system filled, the volume of oil required to actuate a cylinder or pressure point is only equal to the cubic content of the piston displacement. The small booster, producing 1 cu. in. of usable oil per stroke, can operate 50 of the tiny 1/2-20 pressure points a full .22 max. stroke, and even more when strokes are kept to a minimum.

Features:

- Built-in manifold
- Complete automatic bleeding with each return stroke
- Automatic relief of system overcharge
- Automatic bleeding feature eliminates pre-filling
- Large volume visible oil reservoir automatically replenishes the system with reserve oil capacity
- Corrosion and wear-resistant materials
- Wear rings on hydraulic piston tube
- Unique self-centering air piston assures long life
- Increases hydraulic pressure to 3,000 PSIG from 100 PSIG air-line pressure
- All models supplied with SAE hydraulic ports
- NPT hydraulic ports available on request

039-104-000DE

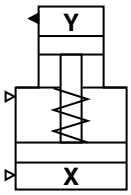

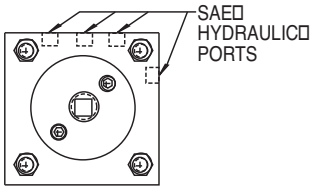

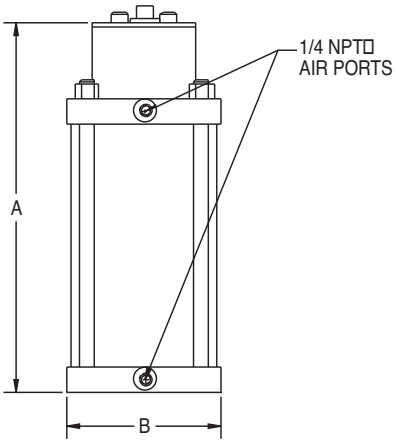

Model no.	Press Ratio	Displacement Per Stroke	Nominal Reservoir Capacity	Weight	Dimensions A	Dimensions B (Square)	Ports
039-101-000DE	33.87:1	1 cu. in.	10.4 cu. in.	9 lbs.	10.88	4.50	SAE #4
039-104-000DE	32.41:1	4 cu. in.	42 cu. in.	23 lbs.	16.38	6.50	SAE #4
039-108-000DE	30.97:1	8 cu. in.	96 cu. in.	43 lbs., 8 oz.	18.00	8.50	SAE #4
039-109-000DE	45.38:1	5 cu. in.	96 cu. in.	43 lbs.	18.00	8.50	SAE #4
(100 PSIG max. input air pressure)							

NOTE: Special High Temperature Seals available for applications where Viton Seals are required. Order as H/T option.

Pump / Reservoir

Model 70150

Air-operated Model 70150 Hydraulic Pump/Reservoir provides fluid output pressure to 4,500 PSIG from regular shop air line.

This unit is a completely self-contained air-operated hydraulic pressure source for portable or permanent installation. It operates economically on ordinary shop line air pressure from 40 to 125 PSIG and delivers high-pressure oil, up to 4,500 PSIG, for operating single or multiple hydraulic clamping devices.

This "off-the-shelf" hydraulic power package is perfect for use in confined areas. The entire one-piece unit can be mounted on a bench, under a bench, beneath a machine table, or anywhere convenient and requires only a single air input connection. The unit can also be centrally located to serve several work stations. The oil displacement and pressure available are charted using various system pressures.

The "continuous pumping" feature ensures the desired pressure and automatically compensates for any leakage in the system. Since no electricity is required, the DE-STA-CO Hydraulics System Pump/ Reservoir is particularly well suited for use in hazardous locations. It can be ordered with special seals for use with non-combustible hydraulic fluids. Extra care has been taken to achieve a quiet running unit. When measured at three feet, the noise level is only 85 dBA.

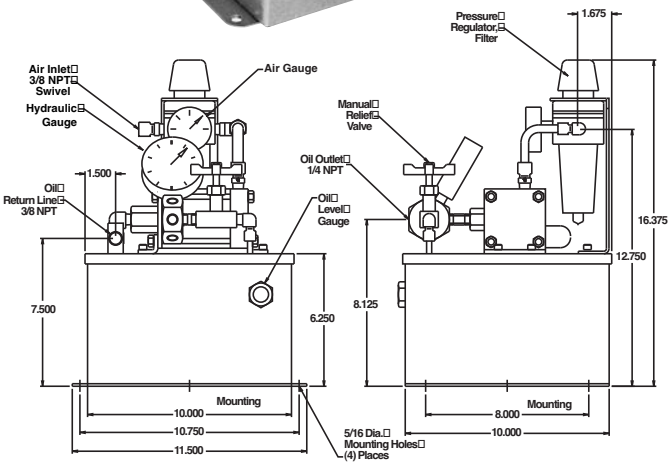

Features:

- Lightweight & compact
- Low initial cost & maintenance
- Automatically holds desired pressure-compensates for leaks

Performance Data

Air Drive Pressure PSIG	OUTPUT FLOW – IN³ / MIN. / INLET AIR VOLUME – CFM										
	OUTPUT PRESSURE – PSIG										
	0	500	1000	1500	2000	2250	2500	3000	3500	4000	4500
40	128 / 10	95 / 9	50 / 6								
60	138	114 / 14	85 / 13	58 / 10							
70	140 / 15	120 / 15	97 / 15	73 / 13	45 / 11	30 / 6					
80	142 / 17	123 / 17	104 / 16	84 / 15	62 / 13	52 / 11	40 / 8				
90	144 / 18	126 / 18	110 / 18	92 / 17	74 / 16	65 / 15	55 / 14	30 / 8			
100	146 / 20	128 / 20	113 / 20	98 / 20	83 / 19	75 / 18	67 / 17	50 / 19	20 / 7		
125	150 / 22	132 / 22	120 / 22	108 / 22	95 / 22	90 / 21	81 / 20	68 / 18	55 / 15	36 / 11	12 / 5

NOTE: See page 15.8 for application information.

100178DE

This two-stage, Continuous Pressure (demand) Pump contains all the necessary controls and circuitry for powering single-acting or double-acting continuous pressure workholding systems.

It has a pressure switch and pressure regulator, both infinitely adjustable throughout the operating pressure range of 1,000 to 5,000 PSI. An internal safety relief valve prevents damage from exceeding the maximum rated pressure. It is an economical gerotor/radial piston pump designed for remote mounted valves only. The pump is shipped with 1.5 gallons of oil.

Features:

- Drip proof induction motor
- CSA approved
- Filtered filler/breather cap
- Liquid-filled gauge
- Carrying handle
- Thermal overload protection
- 2-gallon, high density polyethylene reservoir
- 33 cu. in./min. oil flow at max. pressure
- 295 cu. in. usable oil

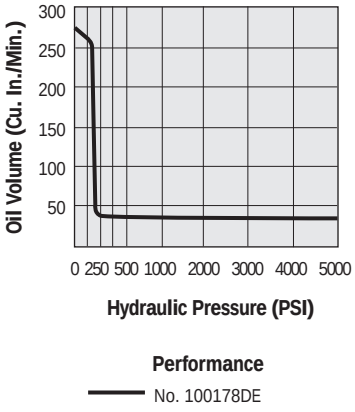

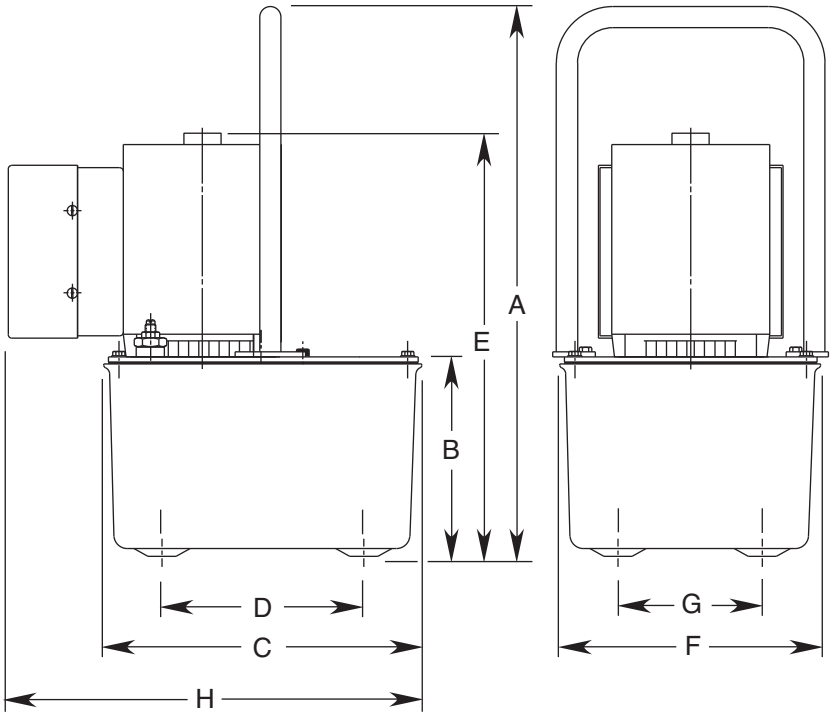

Cat. no.	Specifications			Dimensions (In Inches)							
	Electric Motor	Supply Voltage	Noise Level @ Idle/Max. Press. (dBA)	A	B	C	D	E	F	G	H
100178DE	½ hp; 3,450 rpm; 115/230 VAC 10/5 amps max.; 60 Hz; single phase	115 VAC	67/81	19.875	7.000	11.375	7.125	14.875	9.250	5.125	14.875
100178-230DE		230 VAC									
Available upon request											

NOTE: Mounting screws included (¼-10 x .875 Lg.).

Electric/Hydraulic Pump

100186DE

These Electric/Hydraulic Pumps are two-stage, continuous pressure (demand) pumps that contain all the necessary controls and circuitry for powering any single-acting or double-acting continuous pressure workholding system. They have a pressure switch and an external pressure regulator, both infinitely adjustable throughout the operating pressure range of 1,000 to 5,000 PSI. An internal safety relief valve prevents damage from exceeding the maximum rated pressure.

They are gerotor/axial piston pumps with a totally enclosed fan cooled (TEFC) induction motor, and shipped with two gallons of hydraulic oil.

Features:

- NEMA 12 electrical enclosure and controls
- CSA approved
- Drip/chip cover
- Liquid-filled gauge
- Dual carrying handles
- Thermal overload protection
- 2.5-gallon metal reservoir
- 44 cu. in./min. oil flow at max. pressure
- 590 cu. in. usable oil
- SAE #4 outlet manifold ports

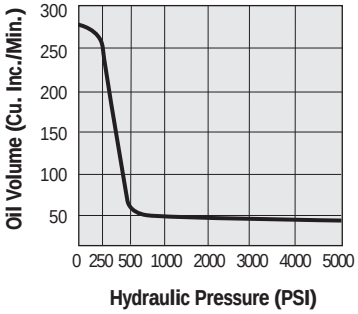

Performance

Pump No. 100186DE

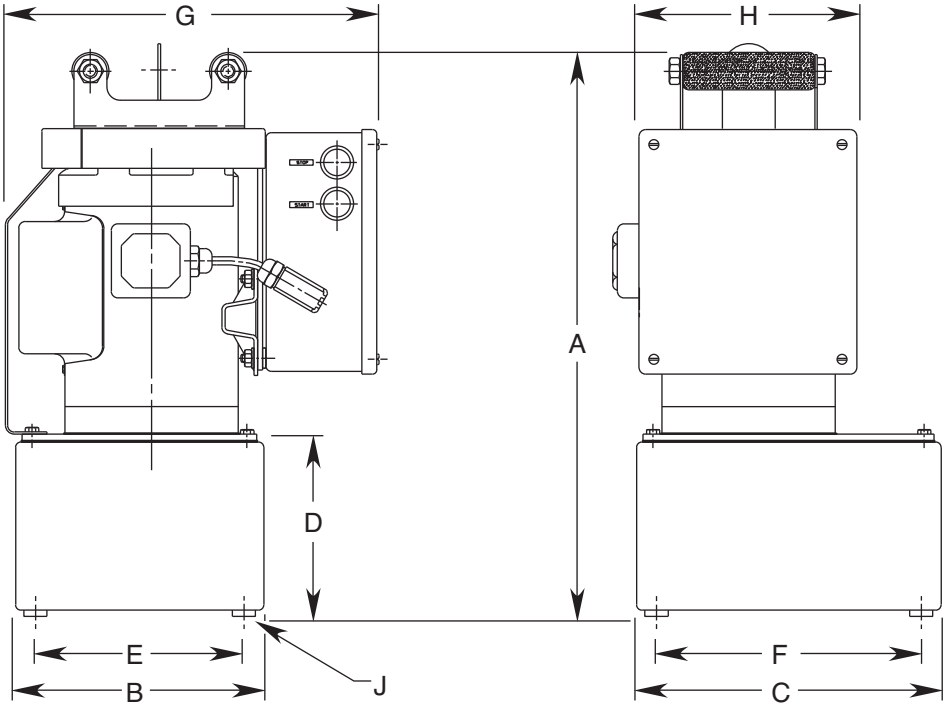

Cat. no.	Specifications			Dimensions (In Inches)								
	Electric Motor	Supply Voltage	Noise Level @ Idle/Max. Press. (dBA)	A	B	C	D	E	F	G	H	J Thread Size
100186DE*	1 hp; 1,725 rpm; 115/230 VAC; 16/8 amps max.; 60 Hz; single phase	115 VAC	70	21.375	9.500	11.500	6.500	8.000	10.000	14.125	9.500	½-20 UNF
100186-230DE		230 VAC										

100179DE

This Manual Pallet Coupling Pump has been designed specifically for use with manual pallet valve 110050DE and 110051DE.

To clamp the pallet, simply start the pump using the remote hand switch. It runs until its pressure setting is reached, then stops automatically and drops pressure, then the hose may be disconnected.

Controlled by a pressure switch and external pressure regulator, this pump is adjustable from 1,000 to 5,000 PSI. An internal relief valve is preset at 5,000 PSI. It has thermal overload protection and integral "electrical shut-down" to prevent unintentional restarting after electrical service interruption or thermal overload. The pump is shipped with one gallon of oil.

Features:

- Drip proof induction motor
- Motor-mounted electrical enclosure
- 2-gallon plastic reservoir
- Liquid-filled gauge
- Filtered, pressure/vacuum relief fill cap
- External pressure switch and regulator
- Carrying handle
- SAE #6 Outlet Manifold Ports
- 295 cu. in. usable oil
- Includes No. 100908DE female coupler (1/4" NPT thread size)
- CSA approved
- Max. flow 33 cu. in./min. at max. pressure.

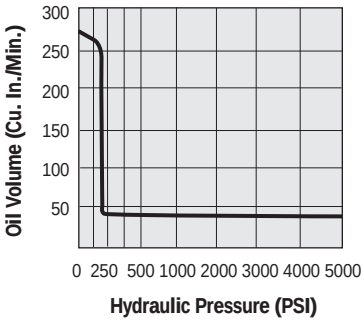

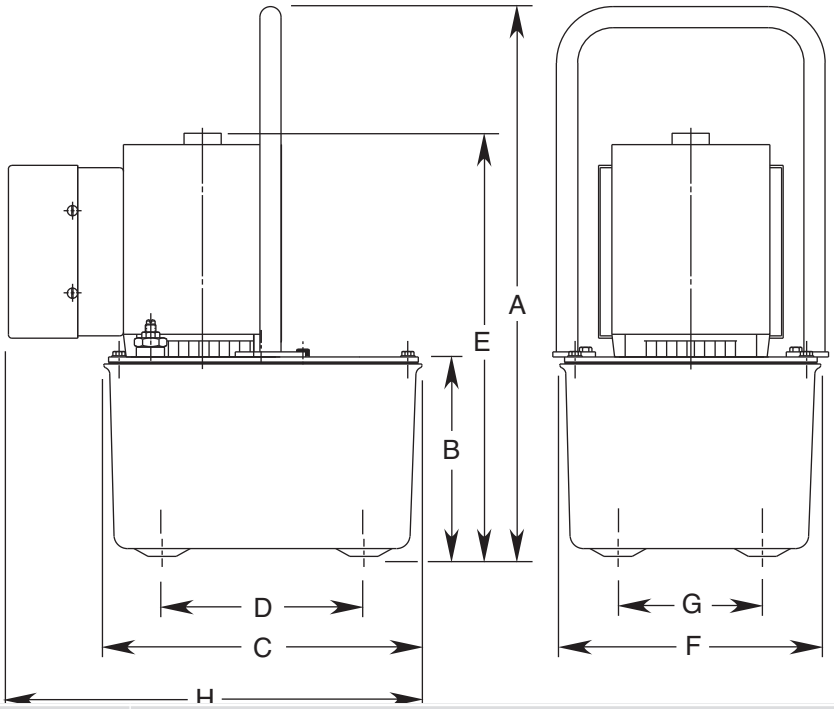

Cat. no.	Specifications			Dimensions (In Inches)							
	Electric Motor	Supply Voltage	Noise Level @ Idle/Max. Press. (dBA)	A	B	C	D	E	F	G	H
100179DE	½ hp; 3,450 rpm 115 VAC; 10 amps max.; 60 Hz; single phase	115 VAC	67/81	19.875	7.000	11.375	7.125	14.875	9.250	5.125	14.875
100179-230DE	½ hp; 3,450 rpm 230 VAC; 5 amps max.; 60 Hz; single phase	230 VAC									
Available upon request											

NOTE: Mounting screws included (1/4-10 x .875 Lg.).

Manual Pallet Coupling Pump

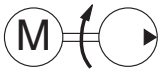

100888DE

DE-STA-CO's one-horsepower, totally enclosed-fan cooled Induction Motor Pump, is outfitted to operate DE-STA-CO's single-acting manual pallet valves.

To pressurize the clamping components on the pallet, simply start the pump using the remote hand switch. It runs until its pressure setting is reached, then stops automatically and drops pressure. The coupler and hose may now be easily disconnected and later reconnected.

The output of this gerotor/axial piston pump is controlled by a pressure switch and externally adjustable pressure regulator, both adjustable from 1,000 to 5,000 PSI. It is shipped with a coupler and 2 gallons of hydraulic oil. Order a hose to fit your application separately.

Features:

- NEMA 12 electrical enclosure and controls
- CSA approved
- Drip/chip cover
- Liquid filled gauge
- Dual carrying handles
- Thermal overload protection
- 2.5-gallon metal reservoir
- 44 cu. in./min. oil flow at max. pressure
- 590 cu. in. usable oil
- TEFC motor
- Filtered filler/breather cap
- Includes 100908DE female hydraulic coupler (1/4" NPT thread size)

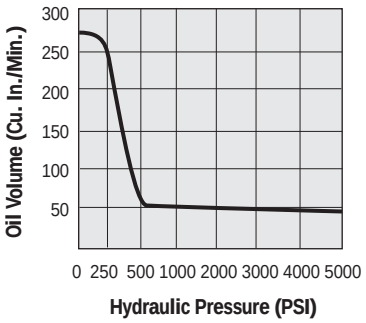

Performance

Pump No. 100888DE

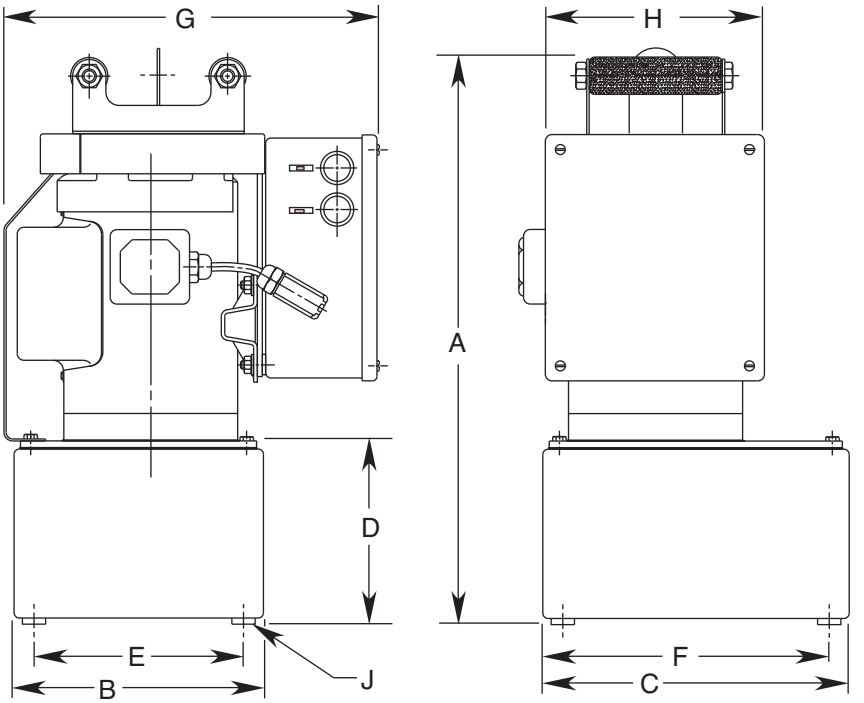

Cat. no.	Specifications: Electric Motor	Supply Voltage	Noise Level @ Idle/Max. Press. (dBA)	Dimensions (In Inches): A	B	C	D	E	F	G	H	J Thread Size
100888DE*	1 hp; 1,725 rpm; 115/230 VAC; 16/8 amps max.; 60 Hz; single phase	115 VAC	70	21.375	9.500	11.500	6.500	8.000	10.000	14.125	9.500	½-20 UNF
100888-230DE		230 VAC										

Available upon request

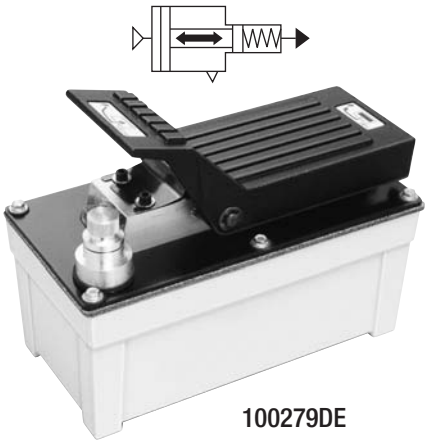

100279DE

Designed specifically for use with manual pallet valves, this Single-Stage Pump includes a 5 ft. hose and special female coupler (100908DE) to mate with our manual pallet valves.

Operation is simple: connect the coupler and release the pallet valve. Change the workpiece, then press the foot pedal to start the pump and clamp the piece. Rocking the pedal forward releases pressure in the coupler while the pallet valve maintains pressure at the pallet. At this point, the coupler and hose may be disconnected.

Features:

Filtered filler/breather cap with dipstick
105 cu. in. metal reservoir
SAE #6 outlet
1⁄4" NPTF air inlet port
Shipped with hydraulic oil
Foot treadle control allows "hands free" operation
Operating Pressure Range (nominal):
- 4,475 PSI max. @ 125 PSI air, max.
- 1,150 PSI min. @ 40 PSI air, min.

98 cu. in. usable oil

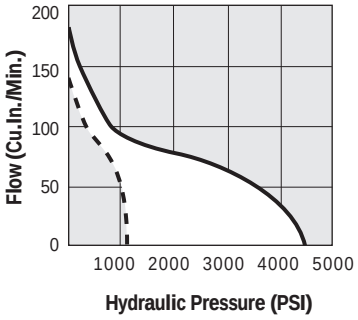

Performance

No. 100279DE
125 psi Air Pressure
40 psi Air Pressure

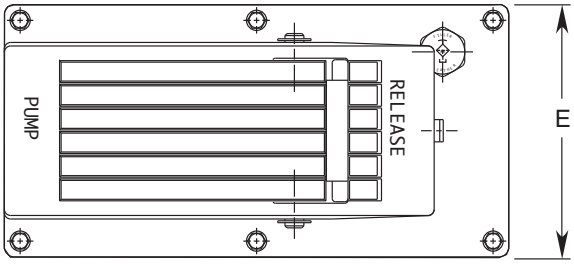

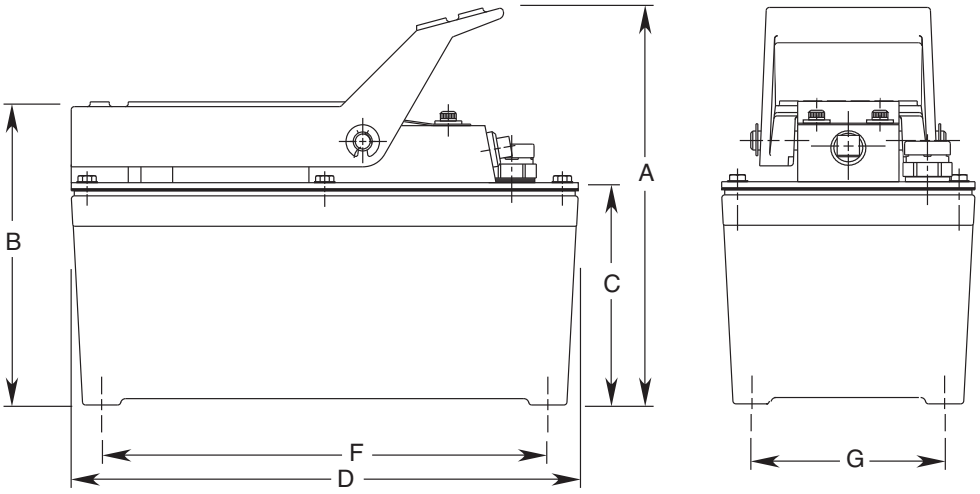

Model no.	Dimensions (In Inches)						
	A	B	C	D	E	F	G
100279DE	7.750	5.875	4.250	10.000	5.000	9.000	4.000

NOTE: This pump is not for use in normal "constant pressure" applications. Requires filtered, regulated, lubricated air supply. Air requirements: 20 CFM (max.) at low hydraulic pressure decreasing to 0 CFM when pump stalls.

Air/Hydraulic Pump

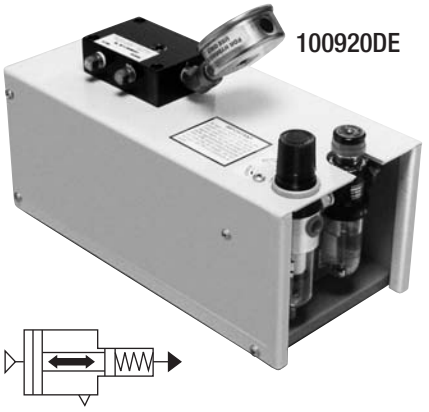

DE-STA-CO's *Single-Stage Pumps* are continuous pressure, reciprocating, stall-type pumps – air pressure is simply converted to hydraulic pressure. Operated by any compressed air source, these pumps save energy by stalling when pressure is developed, and require no energy use to maintain system pressure. Consult factory for pump-mounted valves.

Features:

105 cu. in., high-density polyethylene reservoir
Filtered fill cap with dipstick
Liquid filled gauge
SAE #4
1/4" NPTF air inlet port
98 cu. in usable oil
Shipped filled with oil
Operating Pressure Range (nominal):

100920DE – 5,000 PSI @ 110 PSI air, max. 1,500 PSI @ 40 PSI air, min.
.375 dia. piston size

100190DE – 4,475 PSI @ 125 PSI air, max. 1,150 PSI @ 40 PSI air, min.
.437 dia. piston size

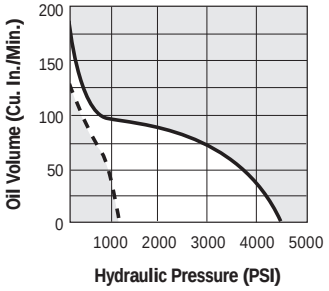

Performance
No. 100190DE
40 psi Air Pressure
125 psi Air Pressure

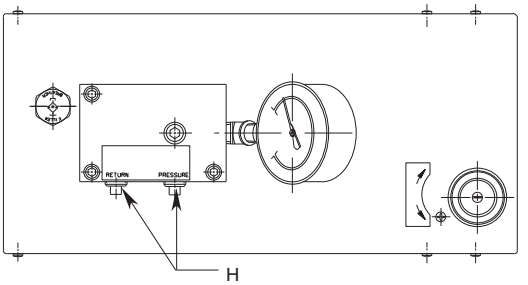

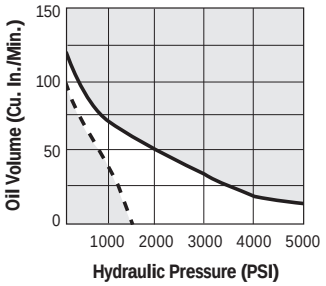

Performance
No. 100920 DE
40 psi Air Pressure
110 psi Air Pressure

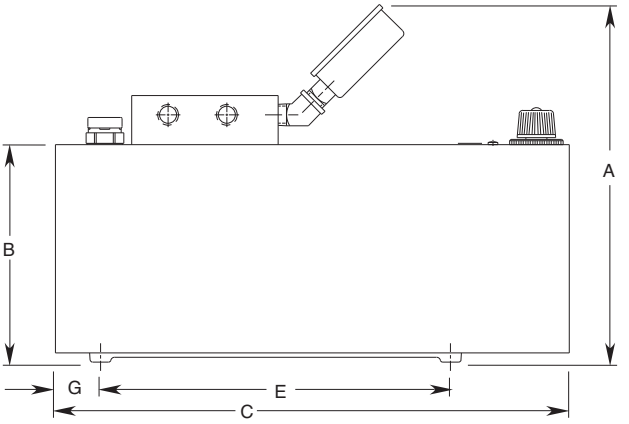

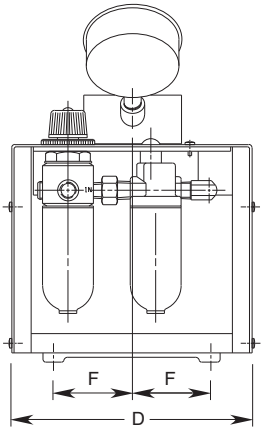

Cat. no.	Specifications			Dimensions (In Inches)							
	Piston Dia.	Operating Pressure Range @ 125 PSI Air Max.	Operating Pressure Range @ 40 PSI Air Min.	A	B	C	D	E	F	G	H Ports
100920DE	0.375	*	1,500	9.500	5.500	13.062	6.125	9.000	2.000	1.250	¼ NPTF
100190DE	0.437	4,475	1,150								

NOTE: Mounting screws included (9-15 x 1.000 Lg.).
AIR REQUIREMENTS: 20 CFM (max.) at low hydraulic pressure decreasing to 0 CFM when pump stalls.
* Air pressure higher than 110 PSI will cause the pump to exceed its 5,000 PSI maximum rating. The internal relief valve will open to protect the pump and the circuit, but the pump will continue to reciprocate rather than stall. This will cause unnecessary wear, noise, heat and air usage.

This versatile *Screw Pump* can produce up to 3,500 PSIG oil pressure. Reservoir capacity is 6.18 cu. in. Two vertical holes in the base and horizontal holes in the top and base, permit mounting in any convenient attitude. The sliding handle allows maximum leverage.

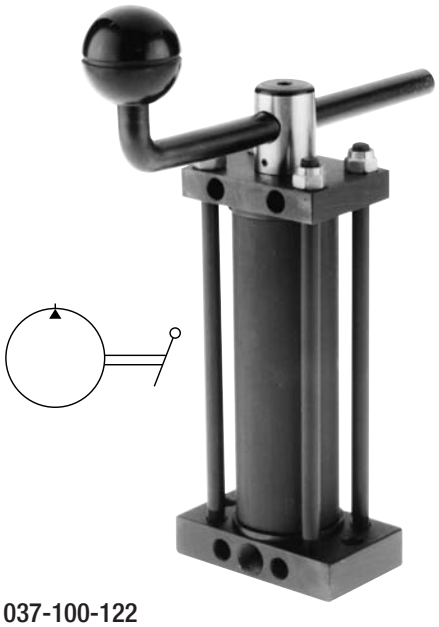

037-100-122
Available upon request

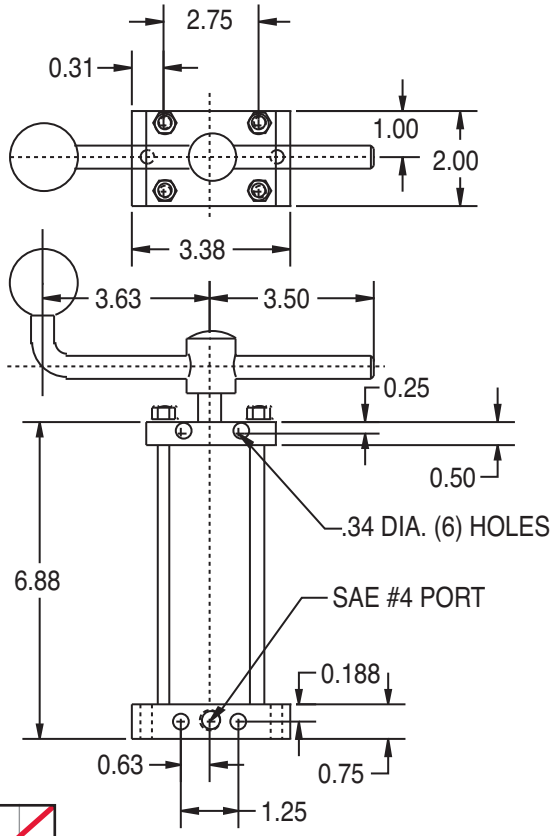

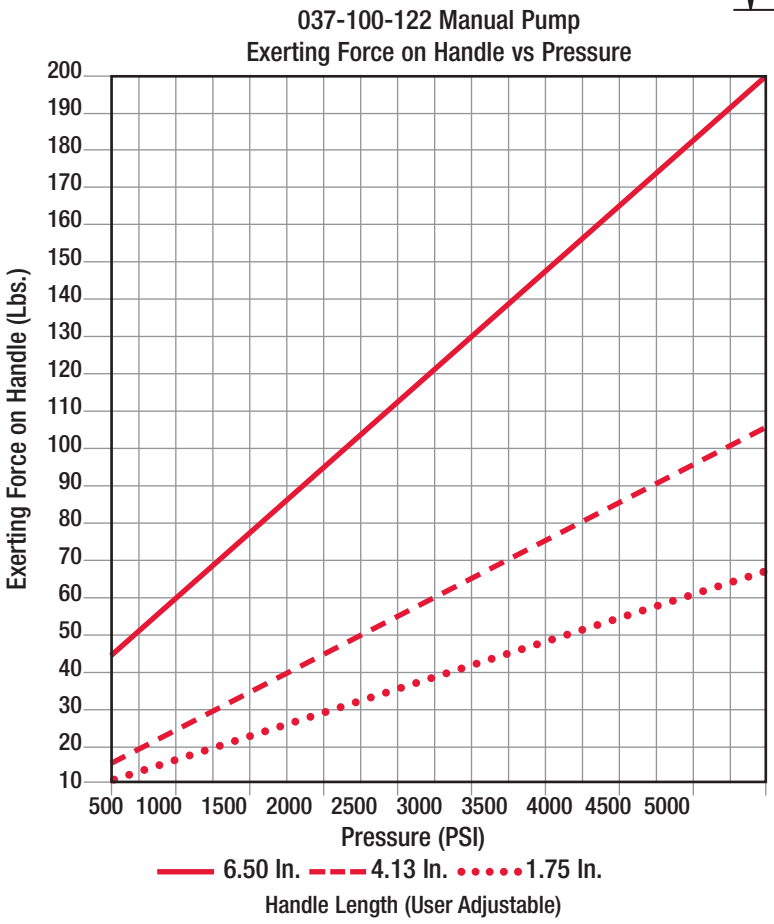

Resulting Hydraulic Pressure (PSI)	Distance Force Applied (Measured from Center Axis of Pump A)		
	6.50 in.	4.13 in.	1.75 in,
500	10	14	43
1,000	17	25	60
1,500	24	35	77
2,000	30	45	94
2,500	36	54	111
3,000	42	65	128
3,500	49	75	145
4,000	55	85	162
4,500	61	95	179
5,000	67	105	196
	Force Required (lbs.)		

Check Valves

The SAE-4 (part number 500173DE) "T" port *Check Valve* is recommended on single-acting circuits where there is more than one directional valve per power source. These check valves are ideal for use in circuits where return line pressure fluctuations may affect released clamps.

Use this anytime a return line pressure spike could cause unclamped actuators to move and affect operator safety. They are designed specifically for DE-STA-CO's No. 100969DE **Directional Control Valves**.

The SAE-4 (500174DE) "P" port check valve is required on all single-acting or double-acting circuits where there is more than one directional valve per power source. These check valves prevent power source pressure fluctuations from affecting the pressure in clamped circuits. Without this check valve, shifting the directional control valve in one circuit will cause a temporary loss of clamping pressure in the other circuit.

500173DE

500174DE

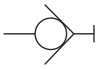

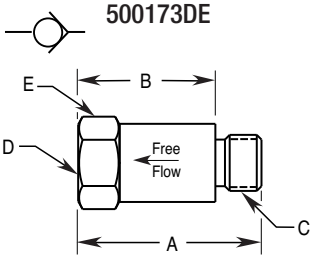

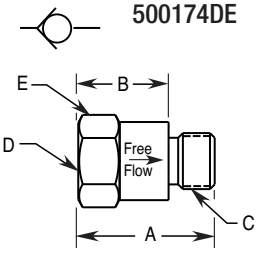

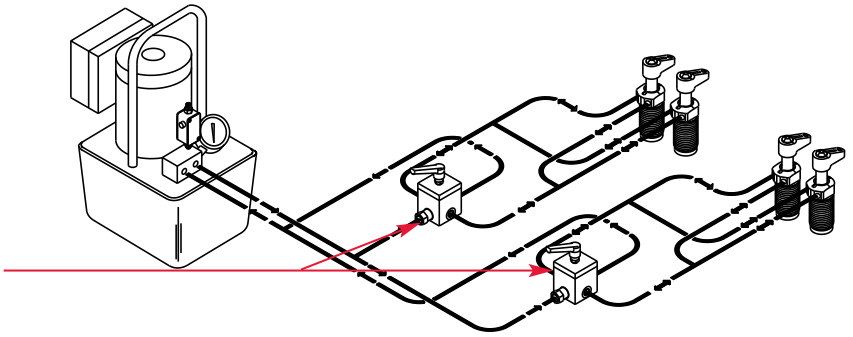

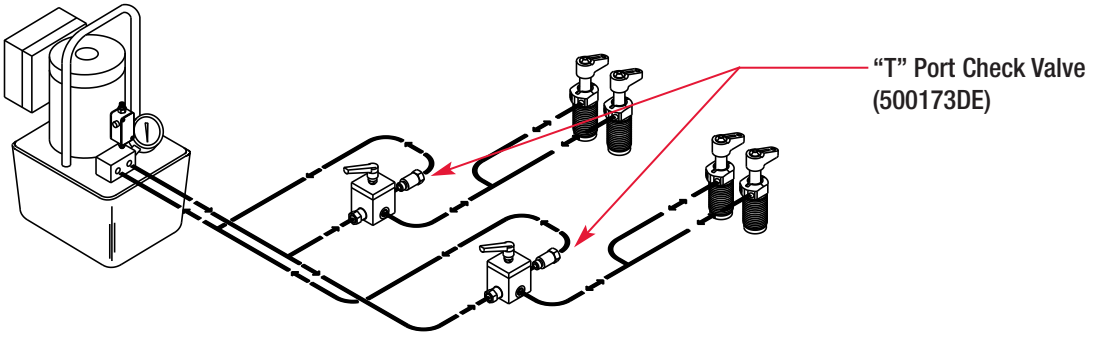

Cat. no.	Specifications			Dimensions (In Inches)				
	Check Valve Location	Cracking Pressure (PSI)	Use With Directional Valve No.	A	B	C Thread Size	D Thread Size	E Hex
500173DE	Outlet	2	100969	1.431	1.071	7/16"-20UNF SAE-4	7/16"-20UNF SAE-4	0.625
500174DE	Inlet			1.065	0.705			

Models 70912, 70913

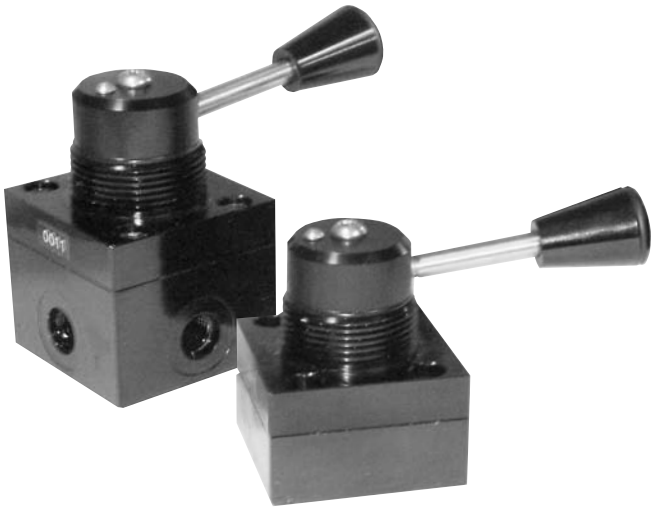

The DE-STA-CO *DCV Series Valves* are constructed of heat-treated alloy steel and aluminum components. They are compact, lightweight (12 oz.) and shift easily even under maximum pressure. The valves have extremely low leakage, less than one (1) drop per two (2) minutes at rated pressure.

Features:

- Available in 6,000 PSI pressure rating
- CV factor for -4 SAE is .26
- Temperature range of -65° F to +160° F
- Manifold mounting conforms to 200 DO1 mounting pattern (for panel mounting, the hole should be 1 13/32" dia. with a maximum thickness of 5/16"
- High strength mounting bolts are included with the manifold mount version valve

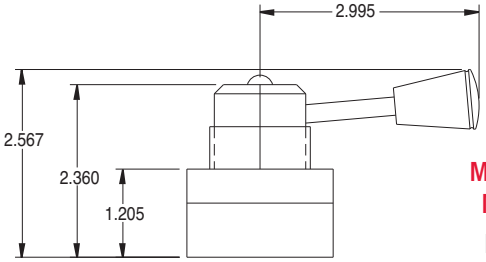

Manifold Mount

Model 70913

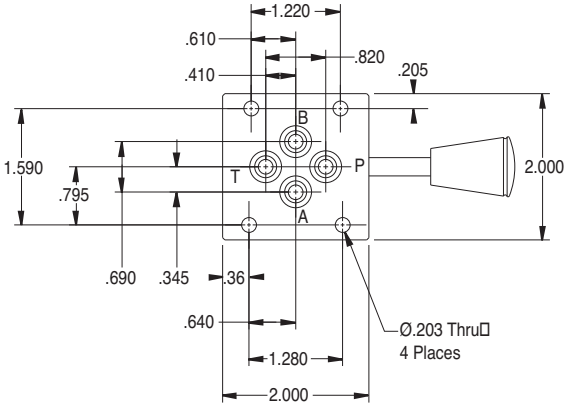

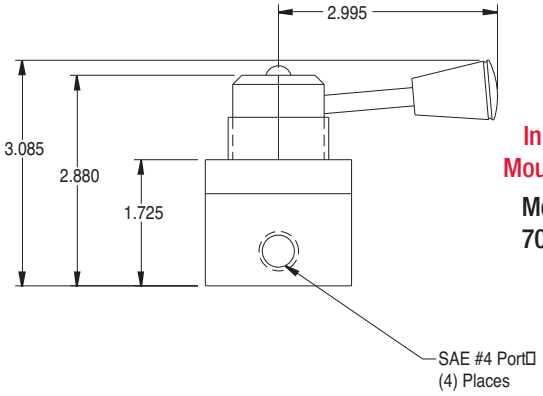

Inline Mounting

Model 70912

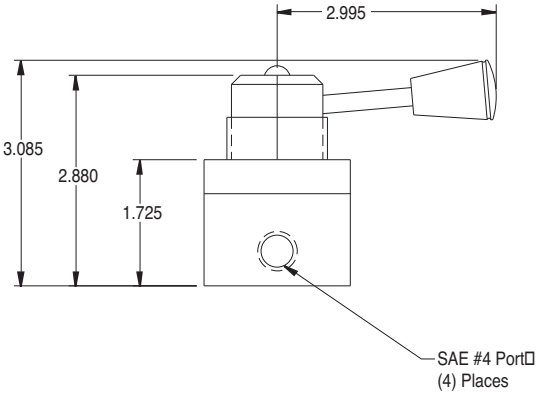

3D CAD Library and Configurator

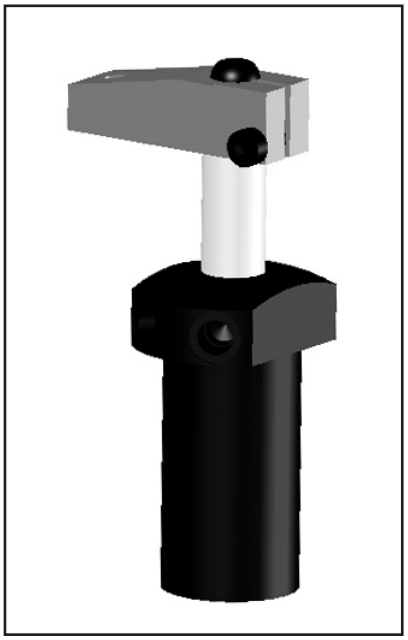

Grab It!
Hold It!
Download It!

DE-STA-CO on-line 3D CAD Library and Configurator provides you with a valuable "hands-on" experience. Configure each DE-STA-CO StrongHold product with the options and accessories you require for your workholding application. Programmable positioning in 2D or 3D formats. Compatible with virtually any CAD language in many output formats.
www.destaco.com

Customer Service and Support

DE-STA-CO is recognized for our customer service centers, tailored to responding quickly to your product and service questions and needs.

DE-STA-CO StrongHold can be reached at:

Phone: (248) 594-5600 (888) DESTACO
Fax: (248) 644-3929 (800) 682-9686
Web: www.destaco.com

Field Representatives

DE-STA-CO StrongHold has a team of manufacturing-experienced field representatives to provide you with prompt, personal and professional assistance for your application solutions.

To find your Field Representative:

Visit www.destaco.com or
call 1-888-337-8226.

Product Warranty

All DE-STA-CO products are thoroughly inspected and tested. We fully guarantee all materials and workmanship to be free of defects. Any product that is found to be defective in design, material or workmanship in the course of its normal use will be promptly replaced.

This Warranty does not apply to any product where the failure is a result of misapplication or abuse, nor is there any Warranty expressed or implied as to the merchantability or fitness for a particular purpose of the product and any warranty is limited to the above express warranty.

The Warranty is null and void if the product is repaired, modified or altered in any way.

DE-STA-CO is not liable for labor, special, direct, incidental or consequential damages and under no circumstances any charges in excess of the invoice amount of the product proven to be defective.

Holding Capacity Charts

Vertical Clamps

2002, 2007, 2010 Series

Model no.	Dim. (℄ to ℄, in inches) Base Pivot to: Spindle Loc. A	Spindle Loc. C	Max. Mechanical Advantage (M.A.) at: Spindle Loc. A	Spindle Loc. C	Max. Holding Capacity [lbs.] at: Spindle Loc. A	Spindle Loc. C	Force Applied to Handle at B
2002-U	1.45	2.65	11.1:1	5.1:1	600	295	0.50
2007-U	1.95	3.92	10.01	5.3:1	1000	470	1.25
2010-U	2.44	4.88	13.01	6.01	1400	720	1.00

201 Series

Model no.	Dim. (℄ to ℄, in inches) Base Pivot to: Spindle Loc. A	Spindle Loc. B	Spindle Loc. C	Max. Mechanical Advantage (M.A.) at: Spindle Loc. A	Spindle Loc. B	Spindle Loc. C	Max. Holding Capacity [lbs.] at: Spindle Loc. A	Spindle Loc. B
201	1.063	–	1.75	9:1	–	6:1	110	–
201-SS	1.063	–	1.75	9:1	–	6:1	125	–
201-TSS	1.063	–	1.75	9:1	–	4:1	125	–

202 Series

Model no.	Dim. (℄ to ℄, in inches) Base Pivot to: Spindle Loc. A	Spindle Loc. B	Spindle Loc. C	Max. Mechanical Advantage (M.A.) at: Spindle Loc. A	Spindle Loc. B	Spindle Loc. C	Max. Holding Capacity [lbs.] at: Spindle Loc. A	Spindle Loc. B
202	–	–	1.875	–	–	8:1	–	–
202-SS	–	–	1.875	–	–	8:1	–	–
202-T	–	–	1.875	–	–	6:1	–	–
202-U	1.25	1.75	2.25	10:1	7:1	5:1	200	140
202-UL	1.25	1.75	2.88	10:1	7:1	4:1	200	170
202-USS	1.25	1.75	2.25	10:1	7:1	5:1	250	170
202-TU	1.25	1.75	2.25	11.1	8:1	7:1	200	140

207 Series

Model no.	Dim. (℄ to ℄, in inches) Base Pivot to: Spindle Loc. A	Spindle Loc. B	Spindle Loc. C	Max. Mechanical Advantage (M.A.) at: Spindle Loc. A	Spindle Loc. B	Spindle Loc. C	Max. Holding Capacity [lbs.] at: Spindle Loc. A	Spindle Loc. B
207-SO	2.875	–	3.75	8:1	–	6:1	500	–
207-UO	2.0	2.875	3.75	10:1	8:1	6:1	375	275
207-USS	2.0	2.875	3.75	10:1	8:1	6:1	450	310
207-TS	2.875	–	3.75	4:1	–	3:1	500	–
207-TU	2.0	2.875	3.75	6:1	5:1	3:1	375	275
207-TL	2.875	–	5.0	4:1	–	3:1	500	–
207-TUL	2.0	–	5.0	5:1	–	3:1	375	–
207-LO	2.875	–	5.0	8:1	–	5:1	500	–
207-ULO	2.0	–	5.0	7:1	–	4:1	375	–

207 Series World Clamp

Model no.	Dim. (℄ to ℄, in inches) Base Pivot to: Spindle Loc. A	Spindle Loc. B	Spindle Loc. C	Max. Mechanical Advantage (M.A.) at: Spindle Loc. A	Spindle Loc. B	Spindle Loc. C	Max. Holding Capacity [lbs.] at: Spindle Loc. A	Spindle Loc. B
207-S	2.875	–	3.75	8:1	–	8:1	500	–
207-U	2.0	2.875	3.75	6:1	8:1	6:1	375	275
207-L	2.875	–	5.0	5:1	–	5:1	500	–
207-UL	2.0	–	5.0	4:1	–	4:1	375	–

210 Series

Model no.	Dim. (℄ to ℄, in inches) Base Pivot to: Spindle Loc. A	Spindle Loc. B	Spindle Loc. C	Max. Mechanical Advantage (M.A.) at: Spindle Loc. A	Spindle Loc. B	Spindle Loc. C	Max. Holding Capacity [lbs.] at: Spindle Loc. A	Spindle Loc. B
210-S	3.625	–	5.25	11:1	–	9:1	750	–
210-TS	3.625	–	5.25	5:1	–	3:1	750	–
210-U	2.375	3.625	4.875	14:1	9:1	7:1	600	390
210-TU	2.375	3.625	4.875	11:1	7:1	5:1	600	390
210-USS	2.375	3.625	4.875	14:1	9:1	7:1	750	490

Subject to technical modifications without no

Ordering no. index

Holding Capacity Charts

Model no.	Page	Model no.	Page	Model no.	Page
7-101	2.36	207-TS	2.16	225-USS	8.7
7-58	2.36	207-TU	2.17	227-U	3.14
7-59	2.36	207-TUL	2.17	227-UB	3.15
7-60	2.36	207-U	2.18	227-USS	8.9
7-61	2.36	207-UB	2.20	229	2.24
201-TU	2.17	207-UBR	2.23	235-U	3.11
201-U	2.18	207-UF	2.38	235-UB	3.12
201-UB	2.20	207-UL	2.18	235-UR	3.13
201-USS	8.4	207-ULB	2.20	235-USS	8.7
202	2.12	207-UO	2.18	237-U	3.14
202-B	2.13	207-UR	2.22	237-UB	3.15
202-SS	8.5	207-USS	8.4	237-USS	8.9
202-T	2.16	210-S	2.12	245-U	3.14
202-TB	2.16	210-SB	2.13	247-S	2.12
202-TU	2.17	210-SBR	2.15	247-SB	2.13
202-U	2.18	210-SR	2.14	247-U	2.18
202-UB	2.20	210-TS	2.16	247-UB	2.20
202-UBSS	8.6	210-TU	2.17	267-S	2.12
202-UL	2.18	210-U	2.18	267-U	2.18
202-USS	8.4	210-UB	2.20	301	6.4
205-S	3.9	210-UBR	2.23	301-SS	8.20
205-SB	3.10	210-UR	2.22	305-U	3.16
205-SL	3.9	210-USS	8.4	305-UR	3.17
205-SR	3.9	213-U	3.14	305-USS	8.10
205-SSS	8.7	213-UB	3.15	307-U	3.16
205-U	3.11	213-USS	8.9	307-UR	3.17
205-UB	3.12	215-S	3.9	307-USS	8.10
205-UL	3.11	215-SB	3.10	309-U	3.16
205-UR	3.11	215-U	3.11	309-UR	3.17
205-USS	8.7	215-UB	3.12	309-USS	8.10
206-HSS	8.8	215-USS	8.7	311	6.4
206-SS	8.8	217-U	3.14	317-S	2.39
207-L	2.12	217-UB	3.15	317-U	2.40
207-LB	2.13	217-USS	8.9	323	6.6
207-LBR	2.15	219	2.24	323-SS	8.15
207-LR	2.14	225-U	3.11	324	6.16
207-S	2.12	225-UB	3.12	324-SS	8.17
207-SB	2.13	225-UBSS	8.10	325	7.4
207-SF	2.37	225-UR	3.13	325-SS	8.19

DE-STA-CO Subject to technical modifications without notice

Vertical Clamps

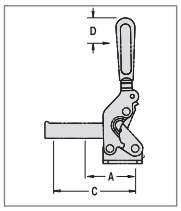

2002, 2007, 2010 Series

Model no.	Dim. (℄ to ℄, in Inches) Base Pivot to		Max. Mechanical Advantage (M.A.) at		Max. Holding Capacity [lbs.] at		Force Applied to Handle at D
	Spindle Loc. A	Spindle Loc. C	Spindle Loc. A	Spindle Loc. C	Spindle Loc. A	Spindle Loc. C	
2002-U	1.45	2.65	11.1:1	5.1:1	600	295	0.50
2007-U	1.95	3.92	10:1	5.3:1	1000	470	1.25
2010-U	2.44	4.88	13:1	6:1	1400	720	1.00

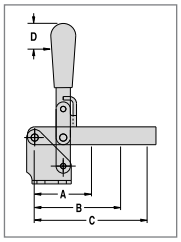

201 Series

Model no.	Dim. (℄ to ℄, in Inches) Base Pivot to			Max. Mechanical Advantage (M.A.) at			Max. Holding Capacity [lbs.] at			Force Applied to Handle at D
	Spindle Loc. A	Spindle Loc. B	Spindle Loc. C	Spindle Loc. A	Spindle Loc. B	Spindle Loc. C	Spindle Loc. A	Spindle Loc. B	Spindle Loc. C	
201	1.063	–	1.75	9:1	–	6:1	100	–	55	0.500
201-SS	1.063	–	1.75	9:1	–	6:1	125	–	60	0.500
201-TSS	1.063	–	1.75	9:1	–	4:1	125	–	60	0.500

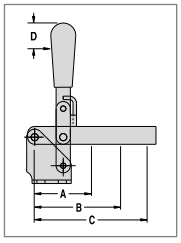

202 Series

Model no.	Dim. (℄ to ℄, in Inches) Base Pivot to			Max. Mechanical Advantage (M.A.) at			Max. Holding Capacity [lbs.] at			Force Applied to Handle at D
	Spindle Loc. A	Spindle Loc. B	Spindle Loc. C	Spindle Loc. A	Spindle Loc. B	Spindle Loc. C	Spindle Loc. A	Spindle Loc. B	Spindle Loc. C	
202	–	–	1.875	–	–	8:1	–	–	200	0.375
202-SS	–	–	1.875	–	–	8:1	–	–	250	0.375
202-T	–	–	1.875	–	–	6:1	–	–	200	0.1875
202-U	1.25	1.75	2.25	10:1	7:1	5:1	200	140	110	0.375
202-UL	1.25	1.75	2.88	10:1	7:1	4:1	200	170	125	0.375
202-USS	1.25	1.75	2.25	10:1	7:1	5:1	250	170	130	0.375
202-TU	1.25	1.75	2.25	11:1	8:1	7:1	200	140	110	0.1875

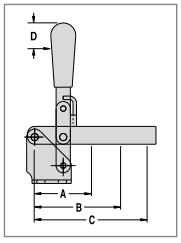

207 Series

Model no.	Dim. (℄ to ℄, in Inches) Base Pivot to			Max. Mechanical Advantage (M.A.) at			Max. Holding Capacity [lbs.] at			Force Applied to Handle at D
	Spindle Loc. A	Spindle Loc. B	Spindle Loc. C	Spindle Loc. A	Spindle Loc. B	Spindle Loc. C	Spindle Loc. A	Spindle Loc. B	Spindle Loc. C	
207-SO	2.875	–	3.75	8:1	–	6:1	500	–	350	0.375
207-UO	2.0	2.875	3.75	10:1	8:1	6:1	375	275	225	0.375
207-USS	2.0	2.875	3.75	10:1	8:1	6:1	450	310	240	0.375
207-TS	2.875	–	3.75	4:1	–	3:1	500	–	350	0.125
207-TU	2.0	2.875	3.75	6:1	5:1	3:1	375	275	225	0.125
207-TL	2.875	–	5.0	4:1	–	3:1	500	–	260	0.125
207-TUL	2.0	–	5.0	5:1	–	3:1	375	–	150	0.125
207-LO	2.875	–	5.0	8:1	–	5:1	500	–	260	0.375
207-ULO	2.0	–	5.0	7:1	–	4:1	375	–	150	0.375

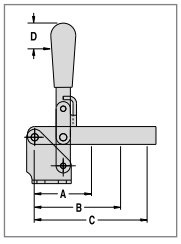

207 Series World Clamp

Model no.	Dim. (℄ to ℄, in Inches) Base Pivot to			Max. Mechanical Advantage (M.A.) at			Max. Holding Capacity [lbs.] at		
	Spindle Loc. A	Spindle Loc. B	Spindle Loc. C	Spindle Loc. A	Spindle Loc. B	Spindle Loc. C	Spindle Loc. A	Spindle Loc. B	Spindle Loc. C
207-S	2.875	–	3.75	8:1	–	6:1	500	–	350
207-U	2.0	2.875	3.75	6:1	8:1	6:1	375	275	225
207-L	2.875	–	5.0	5:1	–	5:1	500	–	260
207-UL	2.0	–	5.0	4:1	–	4:1	375	–	150

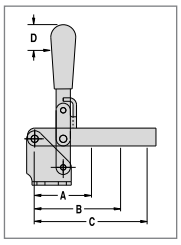

210 Series

Model no.	Dim. (℄ to ℄, in Inches) Base Pivot to			Max. Mechanical Advantage (M.A.) at			Max. Holding Capacity [lbs.] at			Force Applied to Handle at D
	Spindle Loc. A	Spindle Loc. B	Spindle Loc. C	Spindle Loc. A	Spindle Loc. B	Spindle Loc. C	Spindle Loc. A	Spindle Loc. B	Spindle Loc. C	
210-S	3.625	–	5.25	11:1	–	9:1	750	–	500	0.625
210-TS	3.625	-	5.25	5:1	–	3:1	750	–	500	0.125
210-U	2.375	3.625	4.875	14:1	9:1	7:1	600	390	290	0.625
210-TU	2.375	3.625	4.875	11:1	7:1	5:1	600	390	290	0.125
210-USS	2.375	3.625	4.875	14:1	9:1	7:1	750	490	360	0.625

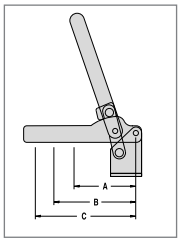

219, 229 Models

Model no.	Dim. (℄ to ℄, in Inches) Base Pivot to			Max. Mechanical Advantage (M.A.) at			Max. Holding Capacity [lbs.] at		
	Spindle Loc. A	Spindle Loc. B	Spindle Loc. C	Spindle Loc. A	Spindle Loc. B	Spindle Loc. C	Spindle Loc. A	Spindle Loc. B	Spindle Loc. C
219	2.75	4.0	5.0	8.8:1	5.8:1	4.7:1	350	240	190
229	3.0	4.523	6.125	7:1	5:1	3:1	1000	675	500

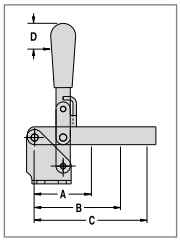

518 Model

Model no.	Dim. (℄ to ℄, in Inches) Base Pivot to			Max. Mechanical Advantage (M.A.) at			Max. Holding Capacity [lbs.] at			Force Applied to Handle at D
	Spindle Loc. A	Spindle Loc. B	Spindle Loc. C	Spindle Loc. A	Spindle Loc. B	Spindle Loc. C	Spindle Loc. A	Spindle Loc. B	Spindle Loc. C	
518	2.5	3.25	4.0	14:1	13:1	11:1	500	380	310	0.750

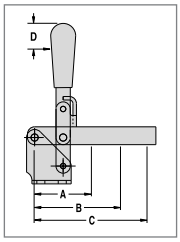

247, 267 Series

Model no.	Dim. (℄ to ℄, in Inches) Base Pivot to			Max. Mechanical Advantage (M.A.) at			Max. Holding Capacity [lbs.] at			Force Applied to Handle at D
	Spindle Loc. A	Spindle Loc. B	Spindle Loc. C	Spindle Loc. A	Spindle Loc. B	Spindle Loc. C	Spindle Loc. A	Spindle Loc. B	Spindle Loc. C	
247-S	4.563	6.125	7.0	10:1	6:1	5:1	1000	740	650	0.831
247-U	3.0	4.523	6.125	12:1	10:1	6:1	1000	650	480	0.831
267-U	4.0	6.0	8.0	18:1	12:1	8:1	1200	800	600	0.875
267-S	6.0	8.0	8.75	12:1	8:1	8:1	1200	900	820	0.875

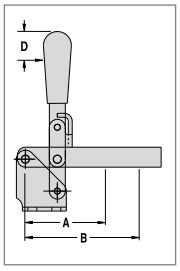

548, 578, 588 Series

Model no.	Dim. (℄ to ℄, in Inches) Base Pivot to		Max. Mechanical Advantage (M.A.) at		Max. Holding Capacity [lbs.] at		Force Applied to Handle at D
	Spindle Loc. A	Spindle Loc. B	Spindle Loc. A	Spindle Loc. B	Spindle Loc. A	Spindle Loc. B	
548	3.5	6.0	4.5:1	3.4:1	2500	1500	0.500
578	4.5	7.0	7.6:1	4.2:1	4000	2500	0.500
588	5.0	8.0	5.7:1	4.5:1	6000	3750	0.500

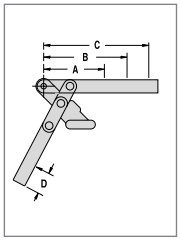

317 Series

Model no.	Dim. (℄ to ℄, in Inches) Base Pivot to			Max. Mechanical Advantage (M.A.) at			Max. Holding Capacity [lbs.] at			Force Applied to Handle at D
	Spindle Loc. A	Spindle Loc. B	Spindle Loc. C	Spindle Loc. A	Spindle Loc. B	Spindle Loc. C	Spindle Loc. A	Spindle Loc. B	Spindle Loc. C	
317-U	2.0	2.875	3.75	17:1	11:1	8:1	375	260	200	0.500
317-S	2.5	3.75	5.0	13:1	8:1	5:1	375	250	190	0.500

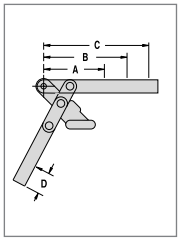

527 Series

Model no.	Dim. (℄ to ℄, in Inches) Base Pivot to			Max. Mechanical Advantage (M.A.) at			Max. Holding Capacity [lbs.] at			Force Applied to Handle at D
	Spindle Loc. A	Spindle Loc. B	Spindle Loc. C	Spindle Loc. A	Spindle Loc. B	Spindle Loc. C	Spindle Loc. A	Spindle Loc. B	Spindle Loc. C	
527	3.5	4.75	6.0	23:1	16:1	12:1	1000	730	580	0.500

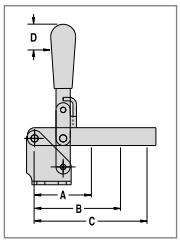

528 Series

Model no.	Dim. (℄ to ℄, in Inches) Base Pivot to			Max. Mechanical Advantage (M.A.) at			Max. Holding Capacity [lbs.] at			Force Applied to Handle at D
	Spindle Loc. A	Spindle Loc. B	Spindle Loc. C	Spindle Loc. A	Spindle Loc. B	Spindle Loc. C	Spindle Loc. A	Spindle Loc. B	Spindle Loc. C	
528	3.5	4.75	6.0	23:1	16:1	12:1	1000	730	580	–

Horizontal Clamps

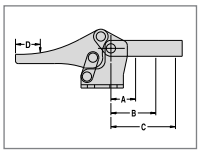

205 Series

Model no.	Dim. (℄ to ℄, in Inches) Base Pivot to			Max. Mechanical Advantage (M.A.) at			Max. Holding Capacity [lbs.] at			Force Applied to Handle at D
	Spindle Loc. A	Spindle Loc. B	Spindle Loc. C	Spindle Loc. A	Spindle Loc. B	Spindle Loc. C	Spindle Loc. A	Spindle Loc. B	Spindle Loc. C	
205-S	–	–	0.875	–	–	4:1	–	–	60	0.312
205-SSS	–	–	0.875	–	–	4:1	–	–	75	0.312
205-SR/SL	–	–	0.875	–	–	4:1	–	–	60	0.312
205-U	0.438	–	0.813	9:1	–	5:1	60	–	50	0.312
205-USS	0.438	–	0.813	9:1	–	5:1	75	–	65	0.312
205-UR/UL	0.438	–	0.813	9:1	–	5:1	60	–	50	0.312

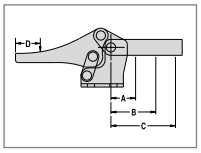

206-SS Series

Model no.	Dim. (℄ to ℄, in Inches) Base Pivot to			Max. Mechanical Advantage (M.A.) at			Max. Holding Capacity [lbs.] at			Force Applied to Handle at D
	Spindle Loc. A	Spindle Loc. B	Spindle Loc. C	Spindle Loc. A	Spindle Loc. B	Spindle Loc. C	Spindle Loc. A	Spindle Loc. B	Spindle Loc. C	
206-SS	0.563	–	1.063	5:1	–	3:1	100	–	50	0.375
206-HSS	0.563	–	1.063	5:1	–	3:1	100	–	50	0.375

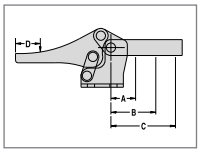

215 Series

Model no.	Dim. (℄ to ℄, in Inches) Base Pivot to			Max. Mechanical Advantage (M.A.) at			Max. Holding Capacity [lbs.] at			Force Applied to Handle at D
	Spindle Loc. A	Spindle Loc. B	Spindle Loc. C	Spindle Loc. A	Spindle Loc. B	Spindle Loc. C	Spindle Loc. A	Spindle Loc. B	Spindle Loc. C	
215-S	1.625	–	2.875	6:1	–	4:1	200	–	110	0.312
215-U	1.0	1.625	2.25	9:1	6:1	4:1	200	120	80	0.312
215-USS	1.0	1.625	2.25	9:1	6:1	4:1	250	150	110	0.312

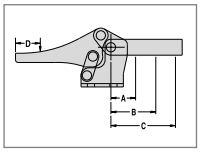

225 Series

Model no.	Dim. (℄ to ℄, in Inches) Base Pivot to			Max. Mechanical Advantage (M.A.) at			Max. Holding Capacity [lbs.] at			Force Applied to Handle at D
	Spindle Loc. A	Spindle Loc. B	Spindle Loc. C	Spindle Loc. A	Spindle Loc. B	Spindle Loc. C	Spindle Loc. A	Spindle Loc. B	Spindle Loc. C	
225-U	1.25	1.875	2.5	12:1	7:1	5:1	500	330	250	0.438
225-USS	1.25	1.875	2.5	12:1	7:1	5:1	600	400	300	0.438

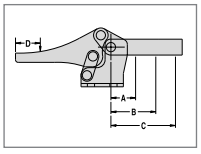

235 Series

Model no.	Dim. (℄ to ℄, in Inches) Base Pivot to			Max. Mechanical Advantage (M.A.) at			Max. Holding Capacity [lbs.] at			Force Applied to Handle at D
	Spindle Loc. A	Spindle Loc. B	Spindle Loc. C	Spindle Loc. A	Spindle Loc. B	Spindle Loc. C	Spindle Loc. A	Spindle Loc. B	Spindle Loc. C	
235-U	1.75	2.938	4.125	9:1	7:1	5:1	750	450	300	0.500
235-USS	1.75	2.938	4.125	9:1	7:1	5:1	850	500	360	0.500

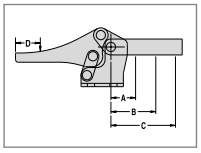

213, 217, 227, 237, 245 Series

Model no.	Dim. (℄ to ℄, in Inches) Base Pivot to			Max. Mechanical Advantage (M.A.) at			Max. Holding Capacity [lbs.] at			Force Applied to Handle at D
	Spindle Loc. A	Spindle Loc. B	Spindle Loc. C	Spindle Loc. A	Spindle Loc. B	Spindle Loc. C	Spindle Loc. A	Spindle Loc. B	Spindle Loc. C	
213-U	0.75	1.188	1.625	7:1	5:1	3:1	150	95	70	0.250
213-USS	0.75	1.188	1.625	7:1	5:1	3:1	150	95	70	0.250
217-U	1.125	1.875	2.625	7:1	4:1	3:1	200	120	80	0.500
217-USS	1.125	1.875	2.625	7:1	4:1	3:1	250	150	100	0.500
227-U	1.25	2.0	2.75	8:1	5:1	3:1	500	310	225	0.500
227-USS	1.25	2.0	2.75	8:1	5:1	3:1	600	375	270	0.500
237-U	1.75	3.125	4.5	6:1	3:1	2:1	750	420	290	0.500
237-USS	1.75	3.125	4.5	6:1	3:1	2:1	850	475	330	0.500
245-U	2.0	3.5	5.0	11:1	6:1	5:1	1000	570	400	0.500
										0.500

Horizontal Clamps

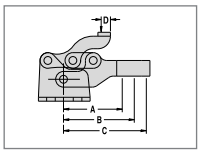

305, 307, 309 Series

Model no.	Dim. (℄ to ℄, in Inches) Base Pivot to			Max. Mechanical Advantage (M.A.) at			Max. Holding Capacity [lbs.] at			Force Applied to Handle at D
	Spindle Loc. A	Spindle Loc. B	Spindle Loc. C	Spindle Loc. A	Spindle Loc. B	Spindle Loc. C	Spindle Loc. A	Spindle Loc. B	Spindle Loc. C	
305-U	1.375	–	1.875	3:1	–	2:1	150	–	110	0.125
305-USS	1.375	–	1.875	3:1	–	2:1	200	–	150	0.125
307-U	1.875	2.188	2.5	3:1	2:5	2:1	350	300	260	0.188
307-USS	1.875	2.188	2.5	3:1	2:5	2:1	350	300	260	0.188
309-U	2.5	3.0	3.5	4:1	3:1	2:1	750	625	530	0.3125
309-USS	2.5	3.0	3.5	4:1	3:1	2:1	750	625	530	0.3125

Straight-Line Action Clamps

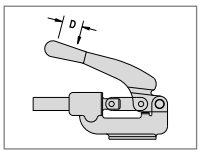

601, 6001 Series

Model no.	Max. Mechanical Advantage (M.A.)		Force Applied to Handle at D
	Pushing	Pulling	
601	14:1	25:1	0.250
601-SS	14:1	25:1	0.250
6001-M	14:1	25:1	0.250

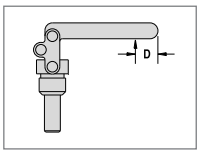

602, 604, 624 Series

Model no.	Max. Mechanical Advantage (M.A.)		Force Applied to Handle at D
	Pushing	Pulling	
602	31:1	28:1	0.500
602-SS	31:1	28:1	0.500
604	45:1	26:1	0.500
604-SS	45:1	26:1	0.500
624	49:1	21:1	0.250
624-SS	49:1	21:1	0.250

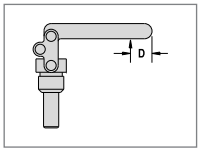

6004 Series

Model no.	Max. Mechanical Advantage (M.A.)		Force Applied to Handle at D
	Pushing	Pulling	
6004	14:4:1	–	–

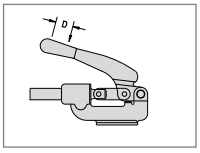

603 Series

Model no.	Max. Mechanical Advantage (M.A.)		Force Applied to Handle at D
	Pushing	Pulling	
603	23:1	34:1	0.500

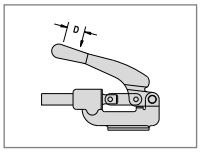

605 Series

Model no.	Max. Mechanical Advantage (M.A.)		Force Applied to Handle at D
	Pushing	Pulling	
605	45:1	40:1	0.500

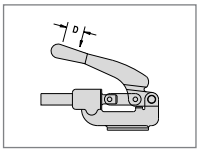

606 Series

Model no.	Max. Mechanical Advantage (M.A.)		Force Applied to Handle at D
	Pushing	Pulling	
606	33:1	–	0.500

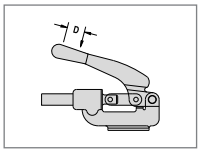

607 Series

Model no.	Max. Mechanical Advantage (M.A.)		Force Applied to Handle at D
	Pushing	Pulling	
607	37:1	64:1	0.250

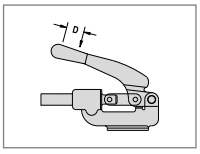

608 Series

Model no.	Max. Mechanical Advantage (M.A.)		Force Applied to Handle at D
	Pushing	Pulling	
608	44:1	50:1	0.250

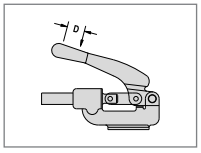

609 Series

Model no.	Max. Mechanical Advantage (M.A.)		Force Applied to Handle at D
	Pushing	Pulling	
609	36:1	47:1	0.500

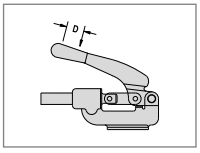

610 Series

Model no.	Max. Mechanical Advantage (M.A.)		Force Applied to Handle at D
	Pushing	Pulling	
610	51:1	70:1	0.250

Straight-Line Action Clamps

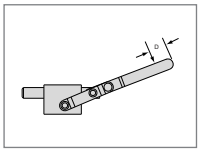

617 Series

Model no.	Max. Mechanical Advantage (M.A.)		Force Applied to Handle at D
	Pushing	Pulling	
617	31:5:1	–	0.75

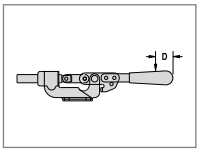

620 Series

Model no.	Max. Mechanical Advantage (M.A.)		Force Applied to Handle at D
	Pushing	Pulling	
620	44:1	–	0.500

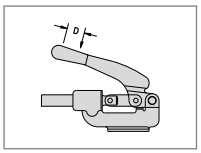

630 Series

Model no.	Max. Mechanical Advantage (M.A.)		Force Applied to Handle at D
	Pushing	Pulling	
630	36:1	23:1	0.250

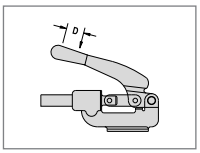

640 Series

Model no.	Max. Mechanical Advantage (M.A.)		Force Applied to Handle at D
	Pushing	Pulling	
640	35:1	–	1.000

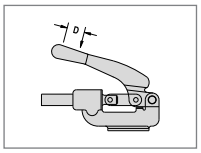

650 Series

Model no.	Max. Mechanical Advantage (M.A.)		Force Applied to Handle at D
	Pushing	Pulling	
650	25:1	–	1.000

Latch Clamps

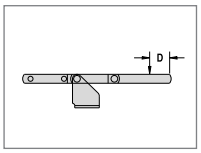

301, 311 Series

Model no.	Max. Mechanical Advantage (M.A.)	Force Applied to Handle at D
301	29:1	0.500
301-SS	29:1	0.500
311	31:1	0.500

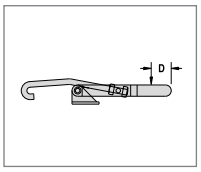

330 Series

Model no.	Max. Mechanical Advantage (M.A.)	Force Applied to Handle at D
330	17:1	0.250
330-SS	17:1	0.250

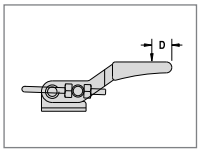

323, 331, 341 Series

Model no.	Max. Mechanical Advantage (M.A.)	Force Applied to Handle at D
323	27:1	0.250
323-SS	27:1	0.250
331	32:1	0.250
331-SS	32:1	0.250
341	29:1	0.250
341-SS	29:1	0.250

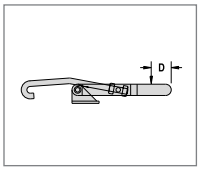

351, 371, 381 Series

Model no.	Max. Mechanical Advantage (M.A.)	Force Applied to Handle at D
351	21:1	0.375
351-SS	21:1	0.375
371	36:1	0.750
371-SS	36:1	0.750
381	37:1	0.750
381-SS	37:1	0.750

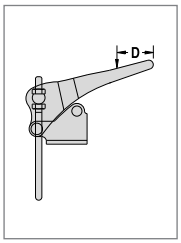

324, 334, 344, 374 Series

Model no.	Max. Mechanical Advantage (M.A.)	Force Applied to Handle at D
324	31:1	0.250
324-SS	31:1	0.250
334	31:1	0.250
334-SS	31:1	0.250
344	45:1	0.250
344-SS	45:1	0.250
374	36:1	0.750

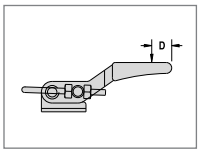

375, 375-B, 385, 385-L Series

Model no.	Max. Mechanical Advantage (M.A.)	Force Applied to Handle at D
375	44:1	0.750

Model no.	Page	Model no.	Page	Model no.	Page
7-101	2.36	207-TS	2.16	225-USS	8.7
7-58	2.36	207-TU	2.17	227-U	3.14
7-59	2.36	207-TUL	2.17	227-UB	3.15
7-60	2.36	207-U	2.18	227-USS	8.9
7-61	2.36	207-UB	2.20	229	2.24
201-TU	2.17	207-UBR	2.23	235-U	3.11
201-U	2.18	207-UF	2.38	235-UB	3.12
201-UB	2.20	207-UL	2.18	235-UR	3.13
201-USS	8.4	207-ULB	2.20	235-USS	8.7
202	2.12	207-UO	2.18	237-U	3.14
202-B	2.13	207-UR	2.22	237-UB	3.15
202-SS	8.5	207-USS	8.4	237-USS	8.9
202-T	2.16	210-S	2.12	245-U	3.14
202-TB	2.16	210-SB	2.13	247-S	2.12
202-TU	2.17	210-SBR	2.15	247-SB	2.13
202-U	2.18	210-SR	2.14	247-U	2.18
202-UB	2.20	210-TS	2.16	247-UB	2.20
202-UBSS	8.6	210-TU	2.17	267-S	2.12
202-UL	2.18	210-U	2.18	267-U	2.18
202-USS	8.4	210-UB	2.20	301	6.4
205-S	3.9	210-UBR	2.23	301-SS	8.20
205-SB	3.10	210-UR	2.22	305-U	3.16
205-SL	3.9	210-USS	8.4	305-UR	3.17
205-SR	3.9	213-U	3.14	305-USS	8.10
205-SSS	8.7	213-UB	3.15	307-U	3.16
205-U	3.11	213-USS	8.9	307-UR	3.17
205-UB	3.12	215-S	3.9	307-USS	8.10
205-UL	3.11	215-SB	3.10	309-U	3.16
205-UR	3.11	215-U	3.11	309-UR	3.17
205-USS	8.7	215-UB	3.12	309-USS	8.10
206-HSS	8.8	215-USS	8.7	311	6.4
206-SS	8.8	217-U	3.14	317-S	2.39
207-L	2.12	217-UB	3.15	317-U	2.40
207-LB	2.13	217-USS	8.9	323	6.6
207-LBR	2.15	219	2.24	323-SS	8.15
207-LR	2.14	225-U	3.11	324	6.16
207-S	2.12	225-UB	3.12	324-SS	8.17
207-SB	2.13	225-UBSS	8.10	325	7.4
207-SF	2.37	225-UR	3.13	325-SS	8.19

Ordering no. index

Model no.	Page	Model no.	Page	Model no.	Page
326	6.15	385-R	6.14	516-B	2.25
330	6.20	385-V2A	8.16	518	2.26
330-SS	8.18	424	7.6	527	2.41
331	6.6	424-2	7.6	527-F	2.42
331-RSS	8.16	425	7.7	528	2.27
331-R	6.8	431	7.7	528-F	2.27
331-SS	8.15	431-2	7.7	533-L	2.30
334	6.16	435	7.8	533-LB	2.31
334-SS	8.17	441	7.6	535-L	2.30
336	6.15	441-2	7.6	535-LB	2.31
341	6.6	443	7.8	536-LB	2.31
341-RSS	8.16	445	7.9	548	2.28
341-R	6.8	462	7.9	557	2.42
341-SS	8.15	462-2	7.10	558	2.29
344	6.16	463	7.10	568	2.29
344-SS	8.17	468	7.11	578	2.28
345	7.5	470	7.11	588	2.28
346	6.15	474	7.12	601	4.5
351	6.20	480	7.12	601-M	4.5
351-B	6.22	482	7.9	601-O	4.5
351-R	6.23	484	7.13	601-OSS	8.11
351-BSS	8.18	486	7.13	601-SS	8.11
351-SS	8.18	501-B	2.33	602	4.6
353-35	6.19	501-LB	2.34	602-MM	4.6
353-65	6.19	503-MB	2.33	602-SS	8.13
359-35	8.22	503-MBLSC	2.33	603	4.11
359-65	8.22	503-MLB	2.34	603-M	4.11
371	6.20	503-MLBLSC	2.34	603-MR	4.12
371-R	6.23	505-MB	2.33	603-MSS	8.13
371-SS	8.18	505-MBLSC	2.33	603-R	4.12
374	6.18	505-MLB	2.34	603-SS	8.13
375	6.9	505-MLBLSC	2.34	604	4.6
375-B	6.10	506-MB	2.33	604-MM	4.6
375-R	6.11	506-MBLSC	2.33	604-MMSS	8.13
375-BR	6.12	506-MLB	2.34	604-SS	8.13
381	6.20	506-MLBLSC	2.34	605	4.11
381-SS	8.18	515	3.18	605-M	4.11
385	6.13	515-B	3.18	606	4.13
385-L	6.13	516	2.25	606-M	4.13

Model no.	Page	Model no.	Page	Model no.	Page
607	4.14	807-S	11.9	894-L	14.8
607-M	4.14	807-U	11.8	894-R	14.8
607-SQ	4.14	810-S	11.9	905	9.4
607-SQM	4.14	810-U	11.8	920	9.4
608	4.11	812-U	11.8	991-MRM	14.10
609	4.15	816	11.19	1000	14.6
609-B	4.15	816-M	11.19	1001	14.6
610	4.16	817-S	11.15	1091-MRM	14.10
610-M	4.16	817-U	11.16	1200	11.24
614-M	4.17	827-S	11.15	1200-E	11.24
615	4.16	827-U	11.16	2002-S	2.7
617	4.18	830	11.21	2002-SB	2.7
620	4.18	830-M	11.21	2002-SBR	2.8
620-M	4.18	840	14.4	2002-SR	2.8
624	4.6	841	14.4	2002-U	2.9
624-MM	4.6	846	11.11	2002-UB	2.9
624-SS	8.13	847-S	11.9	2002-UBR	2.10
630	4.19	847-U	11.8	2002-UR	2.11
630-M	4.19	849	11.13	2007-S	2.7
630-R	4.19	850	11.22	2007-SB	2.7
630-MR	4.19	850-M	11.22	2007-SBR	2.8
640	4.19	858	11.14	2007-SR	2.8
640-M	4.19	860	14.6	2007-U	2.9
650	4.20	861	14.6	2007-UB	2.9
650-M	4.20	863-D	14.8	2007-UBR	2.10
670-1MB	4.22	863-L	14.8	2007-UR	2.11
670-1MBPLS	4.22	863-R	14.8	2010-S	2.7
675-1MB	4.22	864-D	14.8	2010-SB	2.7
675-1MBPLS	4.22	864-L	14.8	2010-SBR	2.8
690-1MB	4.22	864-R	14.8	2010-SR	2.8
690-1MBPLS	4.22	868	11.17	2010-U	2.9
695-1MB	4.22	870-2	11.26	2010-UB	2.9
695-1MBPLS	4.22	871-2	11.26	2010-UBR	2.10
800	11.24	890	14.6	2010-UR	2.11
800-E	11.24	891	14.6	2013-U	3.5
801	11.25	893-D	14.8	2013-UB	3.6
802-U	11.5	893-L	14.8	2013-UBR	3.8
803	11.18	893-R	14.8	2013-UR	3.7
803-M	11.18	894-D	14.8	2017-U	3.5

Ordering no. index

Model no.	Page	Model no.	Page	Model no.	Page
2017-UB	3.6	8315-LA	12.14	110122	9.6
2017-UBR	3.8	8316	12.14	201208	9.2
2017-UR	3.7	8316-LA	12.14	201208-M	9.2
2027-U	3.5	8415	12.14	201943	9.3
2027-UB	3.6	8415-LA	12.14	202203	9.4
2027-UBR	3.8	8416	12.14	202208	9.2
2027-UR	3.7	8416-LA	12.14	202208-M	9.2
2037-U	3.5	9530	12.22	202943	9.3
2037-UB	3.6	9540	12.22	205203	9.4
2037-UBR	3.8	70150	15.34	205203-M	9.4
2037-UR	3.7	70250	15.18	205208-M	9.2
3011	6.5	70260	15.18	205943	9.3
3011-SS	8.21	70626	15.30	207105	9.6
6001-M	4.4	70912	15.43	207203	9.4
6001-MSS	8.12	70913	15.43	207203-M	9.4
6004	4.7	91090	2.43	207206	9.3
6004-MM	4.7	91140	2.43	207209	9.3
6015-M	4.9	95030	4.21	207943	9.3
6015-MR	4.10	95040	4.21	207943-M	9.3
6015-MSS	8.14	95050	4.21	210114	9.6
8007-2F	11.10	95060	4.21	210203	9.4
8007-2FA	11.10	100178DE	15.35	210203-M	9.4
8015	12.14	100178-230DE	15.35	210206	9.3
8015-LA	12.14	100179DE	15.37	210208	9.2
8016	12.14	100179-230DE	15.37	210209	9.3
8016-LA	12.14	100186DE	15.36	213208	9.2
8021	11.11	100186-230DE	15.36	213208-M	9.2
8031	11.20	100190DE	15.40	213943	9.3
8071	11.11	100279DE	15.39	215105	9.6
8101	11.11	100888DE	15.38	215119	9.5
8115	12.14	100888-230DE	15.38	215208	9.2
8115-LA	12.14	100920DE	15.40	215208-M	9.2
8116	12.14	102111	9.6	215219	9.5
8116-LA	12.14	102208	9.2	215319	9.5
8215	12.14	102911	9.6	215905	9.6
8215-LA	12.14	105106	9.6	220203	9.4
8216	12.14	105203	9.4	220208	9.2
8216-LA	12.14	105208	9.2	225119	9.5
8315	12.14	105906	9.6	225208	9.2

Model no.	Page	Model no.	Page	Model no.	Page
225208-M	9.2	424208-M	9.2	519208	9.2
225219	9.5	431208	9.2	527203	9.4
225319	9.5	431208-M	9.2	527208	9.2
235106	9.6	441203	9.4	602106-M	4.8
235110	9.5	441203-AL	9.4	604106	4.8
235119	9.5	441203-M	9.4	604106-M	4.8
235208	9.2	461203	9.4	624108	4.8
235208-M	9.2	461203-M	9.4	624106-M	4.8
235219	9.5	468206	9.3	801010	11.25
235319	9.5	468206-AL	9.3	801528	12.15
235906	9.6	468206-M	9.3	801529	12.15
237943	9.3	485203-AL	9.4	801530	12.15
237943-M	9.3	486203-AL	9.4	801531	12.15
240203	9.4	491203	9.4	801532	12.15
240203-M	9.4	491203-AL	9.4	801553	12.15
240208	9.2	491203-M	9.4	810151	13.4
240208-M	9.2	500173DE	15.42	810152	13.4
245943	9.3	500174DE	15.42	810153	13.4
247109	9.6	501501	2.35	810154	13.4
247110	9.6	501503	2.35	810155	13.4
247208	9.2	503502	2.35	810156	13.4
247208-M	9.2	503503	2.35	810157	13.4
247909	9.6	503503-L	2.35	810158	13.4
250121	9.6	503501	2.35	810159	13.2
250203	9.4	505503	2.35	810163	13.2
250206	9.3	505503-L	2.35	810164	13.2
267102	9.6	505501	2.35	810165	13.2
267203-M	9.4	505502	2.35	810166	13.2
267208	9.2	506501	2.35	810167	13.2
305203	9.4	506502	2.35	810168	13.2
305208	9.2	506503	2.35	810169	13.2
305208-M	9.2	506503-L	2.35	810170	13.2
307208-M	9.2	507107	9.6	810171	13.2
325203	9.4	507206	9.3	810172	13.2
353004	6.19	507208	9.2	810173	13.2
353904	8.22	507208-M	9.2	810174	13.2
353908	8.22	507209	9.3	810175	13.2
424107	9.5	507907	9.6	821512	12.15
424208	9.2	509208	9.2	821513	12.15

Ordering no. index

Model no.	Page	Model no.	Page	Model no.	Page
821553	12.15	82L25-14300H0B	14.16	8MA-084-1	12.18
821554	12.15	82L32-1___H_	14.31	8MA-086-1	12.18
821555	12.15	82L32-103__00	14.22	8MA-087-1	12.18
821556	12.15	82L32-111__00	14.26	8MA-088-1	12.18
841512	12.15	82L32-112__00	14.26	8MA-089-1	12.18
841550	12.15	82L32-123__00	14.26	8MA-092-1	12.18
954050	12.23	82L32-143__00	14.24	8MA-094-1	12.18
954053	12.23	82L32-151__00	14.28	8MA-095-1	12.18
954054	12.23	82L32-152__00	14.28	8MA-096-1	12.18
954055	12.23	82L32-163__00	14.28	8MA-097-1	12.18
2002115-E	9.6	82L32-1630000B	14.16	8MW-018-1	12.20
2007115-E	9.6	82L32-16300H0B	14.16	8MW-020-1	12.20
2007208-M	9.2	82L40-1___H_	14.31	8MW-021-1	12.20
2010115-E	9.6	82L40-103__00	14.22	8MW-022-1	12.20
12/100	5.5	82L40-111__00	14.26	8MW-023-1	12.20
12/200	5.5	82L40-112__00	14.26	010-011-113	15.20
12/300	5.5	82L40-123__00	14.26	010-012-221	15.20
16/100	5.5	82L40-143__00	14.24	010-012-224	15.20
16/200	5.5	82L40-151__00	14.28	010-013-332	15.20
16/300	5.5	82L40-152__00	14.28	010-013-334	15.20
22/100	5.5	82L40-163__00	14.28	010-021-111	15.21
22/200	5.5	82L40-1630000B	14.16	010-021-114	15.21
22/300	5.5	82L40-16300H0B	14.16	010-022-222	15.21
81L12-101__	14.12	89R20-010-1	12.17	010-022-225	15.21
81L12-141__	14.12	89R32-010-1	12.17	010-023-333	15.21
81L16-101__	14.12	89R40-010-1	12.17	010-023-335	15.21
81L16-141__	14.12	89R40-025-1	12.17	010-210-400	15.22
81L20-101__	14.12	89R50-025-1	12.17	010-210-501	15.22
81L20-141__	14.12	89R63-025-1	12.17	010-210-702	15.22
81L25-101__	14.12	8JG-215-1	12.19	010-211-002	15.22
81L25-141__	14.12	8JG-217-1	12.19	010-211-004	15.22
82L25-1___H__	14.31	8JG-218-1	12.19	010-211-502	15.22
82L25-103__00	14.19	8JG-219-1	12.19	010-211-504	15.22
82L25-1030000	14.18	8JG-220-1	12.19	010-212-004	15.22
82L25-10300H0	14.30	8MA-061-1	12.19	020-011-011DE	15.31
82L25-143__00	14.20	8MA-063-1	12.19	020-012-021DE	15.31
82L25-1430000	14.18	8MA-064-1	12.19	020-013-031DE	15.31
82L25-14300H0	14.30	8MA-065-1	12.19	030-1-D-475	15.23
82L25-1430000B	14.16	8MA-066-1	12.19	030-1-S-475	15.23

Model no.	Page	Model no.	Page	Model no.	Page
030-1-D-1100	15.24	037-100-122		090-022-225	15.19
030-1-D-2400	15.25	039-101-000DE	15.33	090-023-333	15.19
030-1-D-4000	15.25	039-104-000DE	15.33	090-023-335	15.19
030-1-S-1100	15.24	039-108-000DE	15.33	F-160/--	5.4
030-1-S-2400	15.25	039-109-000DE	15.33	FL-120/--	5.4
030-1-S-4000	15.25	051-106-160	15.22	FL-121/45	5.4
031-L-475	15.27	051-112-160	15.22	FL-122/45	5.4
031-S-475	15.27	051-125-120	15.22	FL-160/--	5.4
031-L-1100	15.27	051-131-160	15.22	FL-161/60	5.4
031-L-2400	15.27	051-137-160	15.22	FL-162/60	5.4
031-L-4000	15.27	051-137-180	15.22	FO-082/40	5.4
031-S-1100	15.27	051-150-160	15.22	FO-120/--	5.4
031-S-2400	15.27	051-175-160	15.22	FO-121/45	5.4
031-S-4000	15.28	051-187-160	15.22	FO-122/45	5.4
035-125-190	15.5	051-225-160	15.22	FO-160/--	5.4
035-125-290	15.5	051-250-160	15.22	FO-161/60	5.4
035-132-190	12.6	051-262-160	15.22	FO-162/60	5.4
035-132-290	12.6	051-312-160	15.22	FO-220/--	5.4
035-140-190	12.7	052-106-160	15.22	FO-221/80	5.4
035-140-290	12.7	052-112-160	15.22	FRL-12	5.9
035-150-190	12.8	052-125-120	15.22	FRL-16	5.9
035-150-290	12.8	052-131-160	15.22	FRF-12	5.9
035-225-190	12.5	052-137-160	15.22	FRF-16	5.9
035-225-290	12.5	052-137-180	15.22	G-082/40	5.4
035-232-190	12.6	052-150-160	15.22	G-120/--	5.4
035-232-290	12.6	052-175-160	15.22	G-121/45	5.4
035-240-190	12.7	052-187-160	15.22	G-122/45	5.4
035-240-290	12.7	052-225-160	15.22	K-508	5.6
035-250-190	12.8	052-250-160	15.22	K-612	5.6
035-250-290	12.8	052-262-200	15.22	K-816	5.6
036-551-01	12.9	052-312-160	15.22	K-1222	5.6
036-551-02	12.9	090-011-113	15.19	SL3	4.24
036-551-04	12.9	090-012-221	15.19	SME-3-LED	12.20
036-630-01	12.9	090-012-224	15.19	T186-6	10.6
036-630-02	12.9	090-013-332	15.19	T186-12	10.6
036-630-04	12.9	090-013-334	15.19	T186-13	10.4
036-787-01	12.9	090-021-111	15.19	T186-20	10.6
036-787-02	12.9	090-021-114	15.19	T186-24	10.5
036-787-04	12.9	090-022-222	15.19	T186-30	10.6

Ordering no. index

Model no.	Page	Model no.	Page	Model no.	Page
T186-36	10.5	T402-24	10.12		
T186-60	10.5	T402-6	10.12		
T186-84	10.5	T500	10.10		
T186-96	10.5	T550	10.10		
T257-6	10.6	T600-4	10.12		
T257-12	10.6	T600-6	10.12		
T257-18	10.6	T600-8	10.12		
T257-24	10.6	T602-6	10.12		
T257-36	10.6	T602-12	10.12		
T257-54	10.6	T602-18	10.12		
T257-84	10.5	T602-24	10.12		
T257-108	10.5	T602-30	10.12		
T285-9	10.6	T614-0	10.8		
T285-18	10.6	T614-1	10.8		
T285-36	10.5	T614-2	10.8		
T285-40	10.6	VH3	2.53		
T285-48	10.5				
T285-60	10.5				
T285-84	10.5				
T290-9	10.6				
T290-13	10.4				
T290-18	10.6				
T290-36	10.5				
T290-40	10.6				
T290-48	10.5				
T290-60	10.5				
T290-84	10.5				
T321-10	10.6				
T321-24	10.5				
T321-36	10.5				
T321-60	10.5				
T321-84	10.5				
T321-96	10.5				
T400-4	10.12				
T400-6	10.12				
T400-8	10.12				
T402-12	10.12				
T402-18	10.12				

1025 Doris Road, Auburn Hills, MI 48236
Tel: 1.248.836.6750, FAX: 1.248.836.6743
Toll Free Tel: 1.888.DESTACO, Toll Free Fax: 1.800.682-9686
Internet: www.destaco.com, Email: cs-workholding@destaco.com

CustomQuick™ WORKSHEET

COMPANY INFORMATION

DATE: _____

END USER NAME: _____

ATTENTION: _____

REFERENCE: _____

PHONE: _____ EXT.: _____ FAX: _____ EMAIL: _____

ADDRESS: _____

CITY: _____ STATE: _____ ZIP: _____

DISTRIBUTOR NAME: _____

ATTENTION: _____ REFERENCE: _____

PHONE: _____ EXT.: _____ FAX: _____ EMAIL: _____

ADDRESS: _____

CITY: _____ STATE: _____ ZIP: _____

MODIFICATION INFORMATION

BASE MODEL: _____

DESCRIPTION OF MODIFICATION: _____

DESCRIPTION OF APPLICATION/ENVIRONMENT: _____

MATERIAL TYPE: _____

ESTIMATED QUANTITY: _____

REQUIRED DATE: _____

(Please make sketch if possible.):

ACTION TAKEN: _____

SPECIAL PART # ASSIGNED: _____ BY: _____ RELEASE DATE: _____

1025 Doris Road, Auburn Hills, MI 48236
Tel: 1.248.836.6750, FAX: 1.248.836.6743
Toll Free Tel: 1.888.DESTACO, Toll Free Fax: 1.800.682-9686
Internet: www.destaco.com, Email: cs-workholding@destaco.com

CustomQuick™ WORKSHEET

COMPANY INFORMATION

DATE: _____

END USER NAME: _____

ATTENTION: _____

REFERENCE: _____

PHONE: _____ EXT.: _____ FAX: _____ EMAIL: _____

ADDRESS: _____

CITY: _____ STATE: _____ ZIP: _____

DISTRIBUTOR NAME: _____

ATTENTION: _____ REFERENCE: _____

PHONE: _____ EXT.: _____ FAX: _____ EMAIL: _____

ADDRESS: _____

CITY: _____ STATE: _____ ZIP: _____

MODIFICATION INFORMATION

BASE MODEL: _____

DESCRIPTION OF MODIFICATION: _____

DESCRIPTION OF APPLICATION/ENVIRONMENT: _____

MATERIAL TYPE: _____

ESTIMATED QUANTITY: _____

REQUIRED DATE: _____

(Please make sketch if possible.):

ACTION TAKEN: _____

SPECIAL PART # ASSIGNED: _____ BY: _____ RELEASE DATE: _____

1025 Doris Road, Auburn Hills, MI 48236
Tel: 1.248.836.6750, FAX: 1.248.836.6743
Toll Free Tel: 1.888.DESTACO, Toll Free Fax: 1.800.682-9686
Internet: www.destaco.com, Email: cs-workholding@destaco.com

CustomQuick™ WORKSHEET

COMPANY INFORMATION

DATE: _____

END USER NAME: _____

ATTENTION: _____

REFERENCE: _____

PHONE: _____ EXT.: _____ FAX: _____ EMAIL: _____

ADDRESS: _____

CITY: _____ STATE: _____ ZIP: _____

DISTRIBUTOR NAME: _____

ATTENTION: _____ REFERENCE: _____

PHONE: _____ EXT.: _____ FAX: _____ EMAIL: _____

ADDRESS: _____

CITY: _____ STATE: _____ ZIP: _____

MODIFICATION INFORMATION

BASE MODEL: _____

DESCRIPTION OF MODIFICATION: _____

DESCRIPTION OF APPLICATION/ENVIRONMENT: _____

MATERIAL TYPE: _____

ESTIMATED QUANTITY: _____

REQUIRED DATE: _____

(Please make sketch if possible.):

ACTION TAKEN: _____

SPECIAL PART # ASSIGNED: _____ BY: _____ RELEASE DATE: _____

1025 Doris Road, Auburn Hills, MI 48236
Tel: 1.248.836.6750, FAX: 1.248.836.6743
Toll Free Tel: 1.888.DESTACO, Toll Free Fax: 1.800.682-9686
Internet: www.destaco.com, Email: cs-workholding@destaco.com

CustomQuick™ WORKSHEET

COMPANY INFORMATION

DATE: _____

END USER NAME: _____

ATTENTION: _____

REFERENCE: _____

PHONE: _____ EXT.: _____ FAX: _____ EMAIL: _____

ADDRESS: _____

CITY: _____ STATE: _____ ZIP: _____

DISTRIBUTOR NAME: _____

ATTENTION: _____ REFERENCE: _____

PHONE: _____ EXT.: _____ FAX: _____ EMAIL: _____

ADDRESS: _____

CITY: _____ STATE: _____ ZIP: _____

MODIFICATION INFORMATION

BASE MODEL: _____

DESCRIPTION OF MODIFICATION: _____

DESCRIPTION OF APPLICATION/ENVIRONMENT: _____

MATERIAL TYPE: _____

ESTIMATED QUANTITY: _____

REQUIRED DATE: _____

(Please make sketch if possible.):

ACTION TAKEN: _____

SPECIAL PART # ASSIGNED: _____ BY: _____ RELEASE DATE: _____